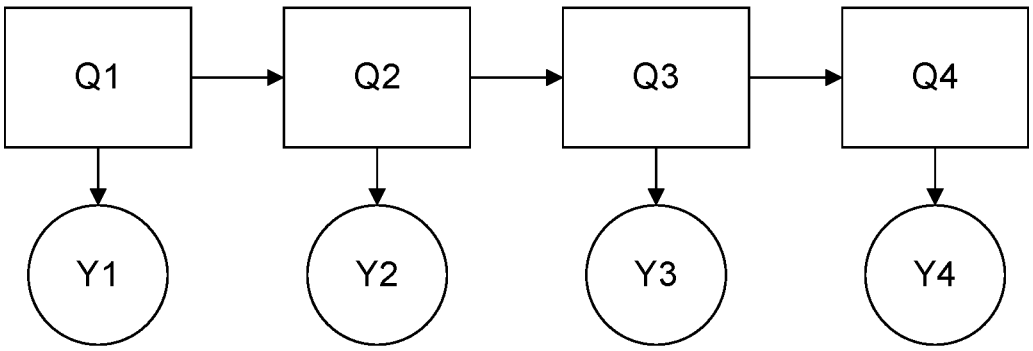

Fig. 1

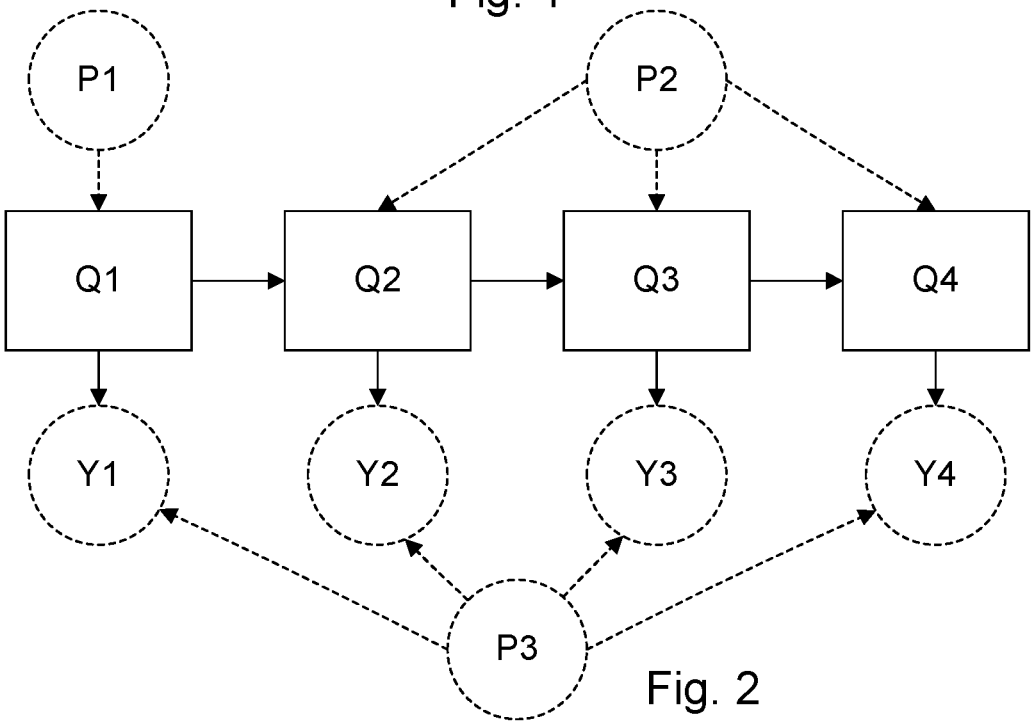

Fig. 2

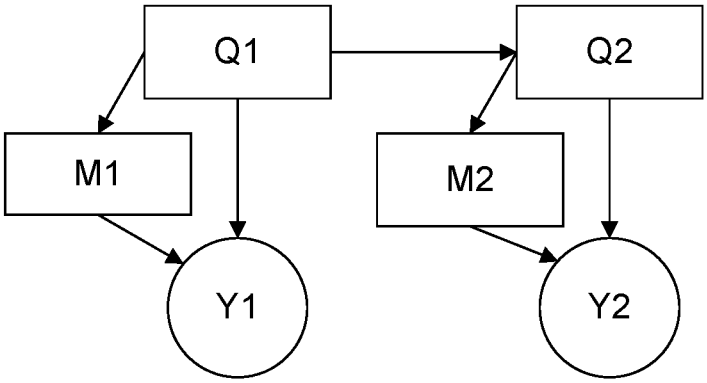

HMM with mixture of Gaussians output

Fig. 3