US 20210344282A1

(19) United States

(12) Patent Application Publication

HOMANN et al.

(10) Pub. No.: US 2021/0344282 A1

(43) Pub. Date: Nov. 4, 2021

(54) **METHOD AND APPARATUS FOR DETERMINING THE INTERMEDIATE CIRCUIT CURRENT OF A CONVERTER**

(71) Applicant: **IAV GmbH Ingenieurgesellschaft Auto und Verkehr**, Berlin (DE)

(72) Inventors: **Michael HOMANN**, Vordorf (DE); **Faical TURKI**, Kamen (DE)

(73) Assignee: **IAV GmbH Ingenieurgesellschaft Auto und Verkehr**, Berlin (DE)

(21) Appl. No.: **17/302,327**

(22) Filed: **Apr. 30, 2021**

(30) **Foreign Application Priority Data**

May 3, 2020 (DE) 10 2020 111 901.1

Publication Classification

(51) **Int. Cl.**

H02M 7/5387 (2006.01)
H02M 1/00 (2006.01)
H03M 3/00 (2006.01)

(52) **U.S. Cl.**

CPC ***H02M 7/53873*** (2013.01); ***H03M 3/458*** (2013.01); ***H02M 1/0012*** (2021.05); ***H02M 1/0009*** (2021.05)

(57) **ABSTRACT**
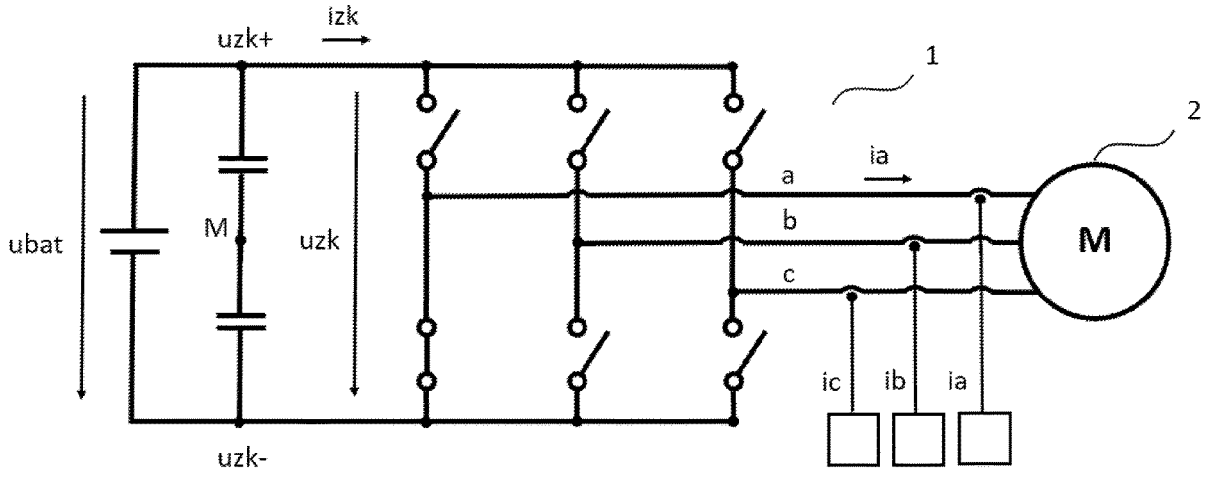
An intermediate circuit current of a power converter is determined as precisely as possible in a simple and inexpensive manner. The intermediate circuit current is determined as a function of a detection of the measured output voltages and output currents of the individual phases.