FIG. 2

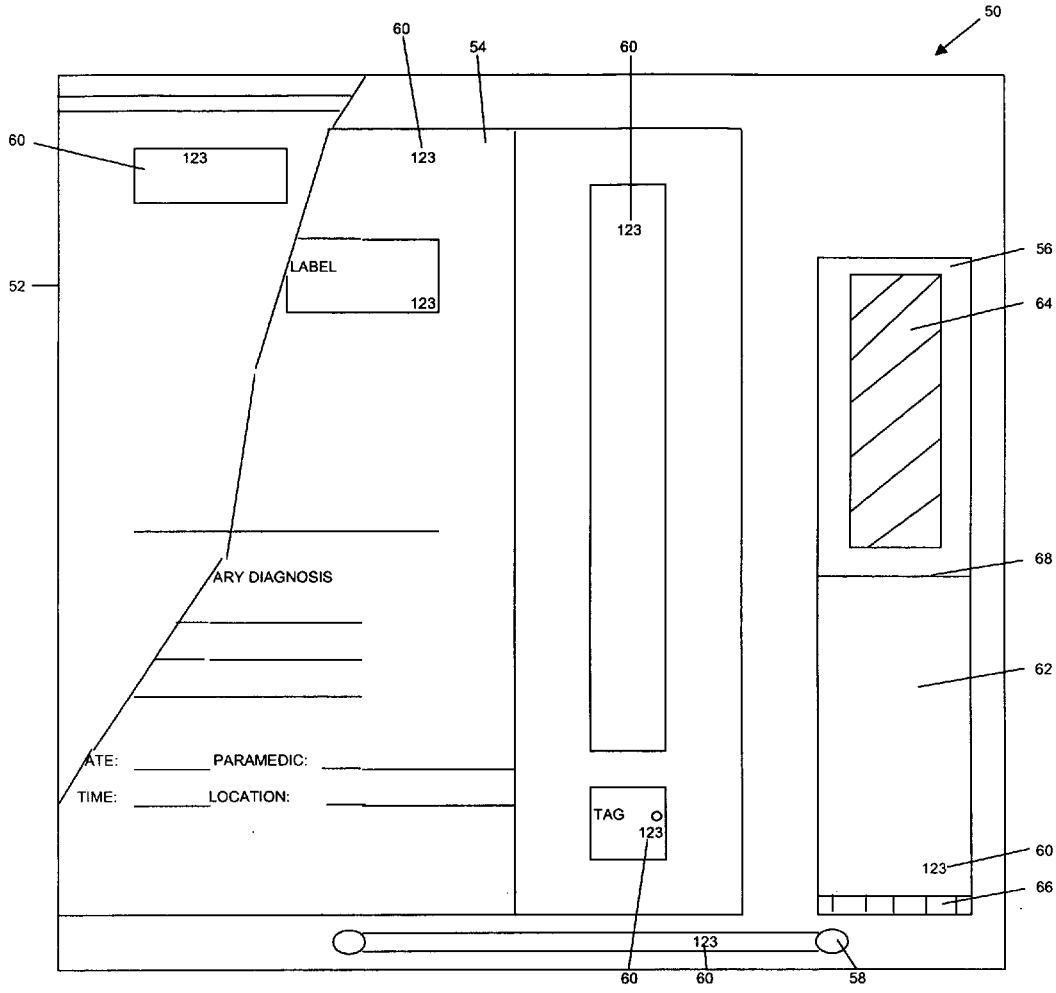
50
60
54
60
60
123
123
123
LABEL
123
52
56
64
68
ARY DIAGNOSIS
62
ATE: PARAMEDIC:
TIME: LOCATION:
TAG
123
60
123
66
123
60
60
58