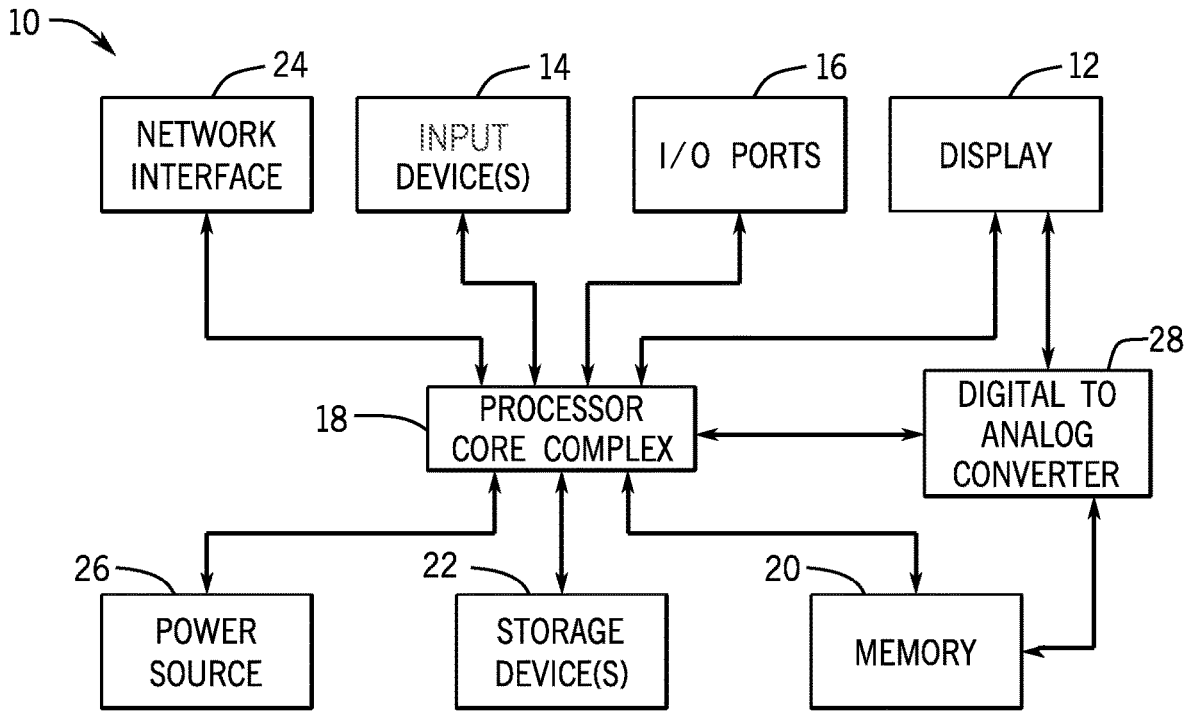
10
24
NETWORK INTERFACE
14
INPUT DEVICE(S)
16
I/O PORTS
12
DISPLAY
28
DIGITAL TO ANALOG CONVERTER
18
PROCESSOR CORE COMPLEX
26
POWER SOURCE
22
STORAGE DEVICE(S)
20
MEMORY

FIG. 1