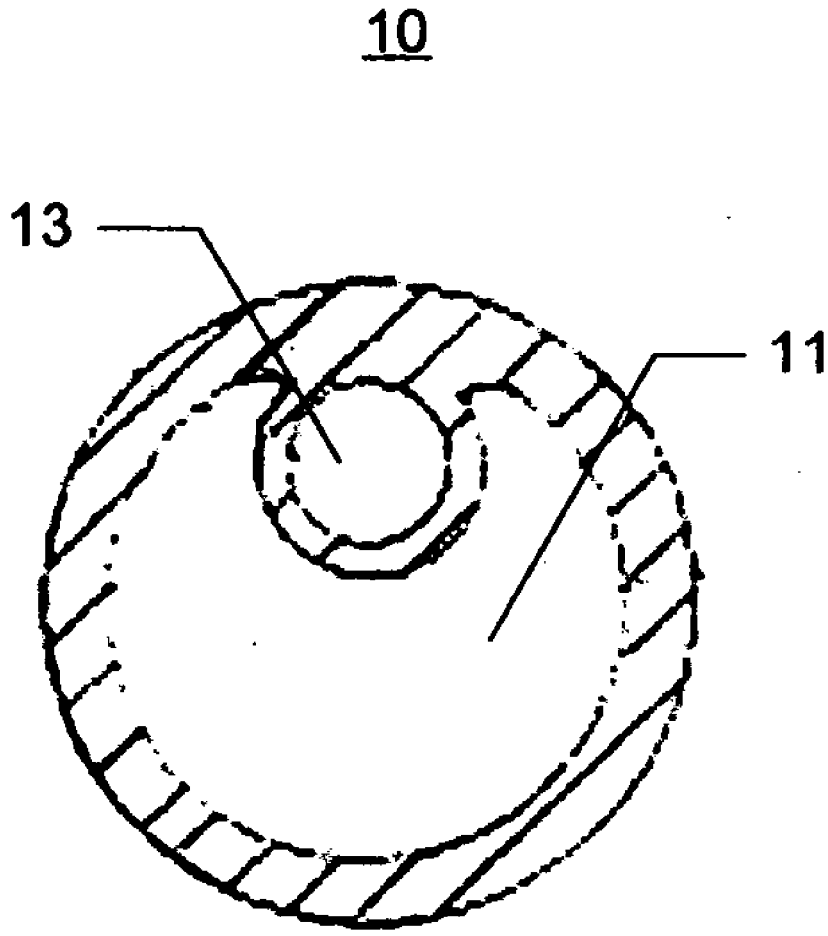

Fig. 1D