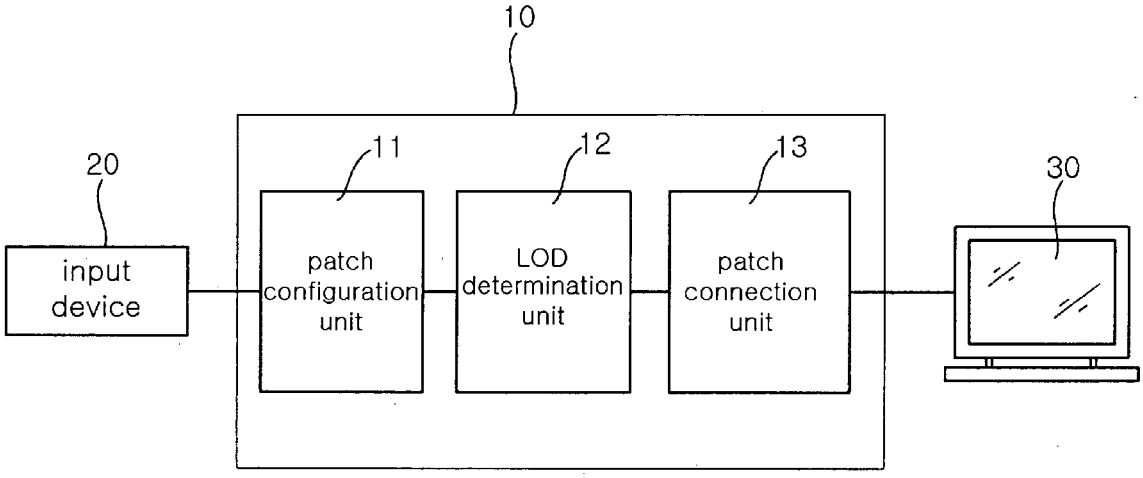
10
20
input device
11
patch configuration unit
12
LOD determination unit
13
patch connection unit
30

FIG. 1