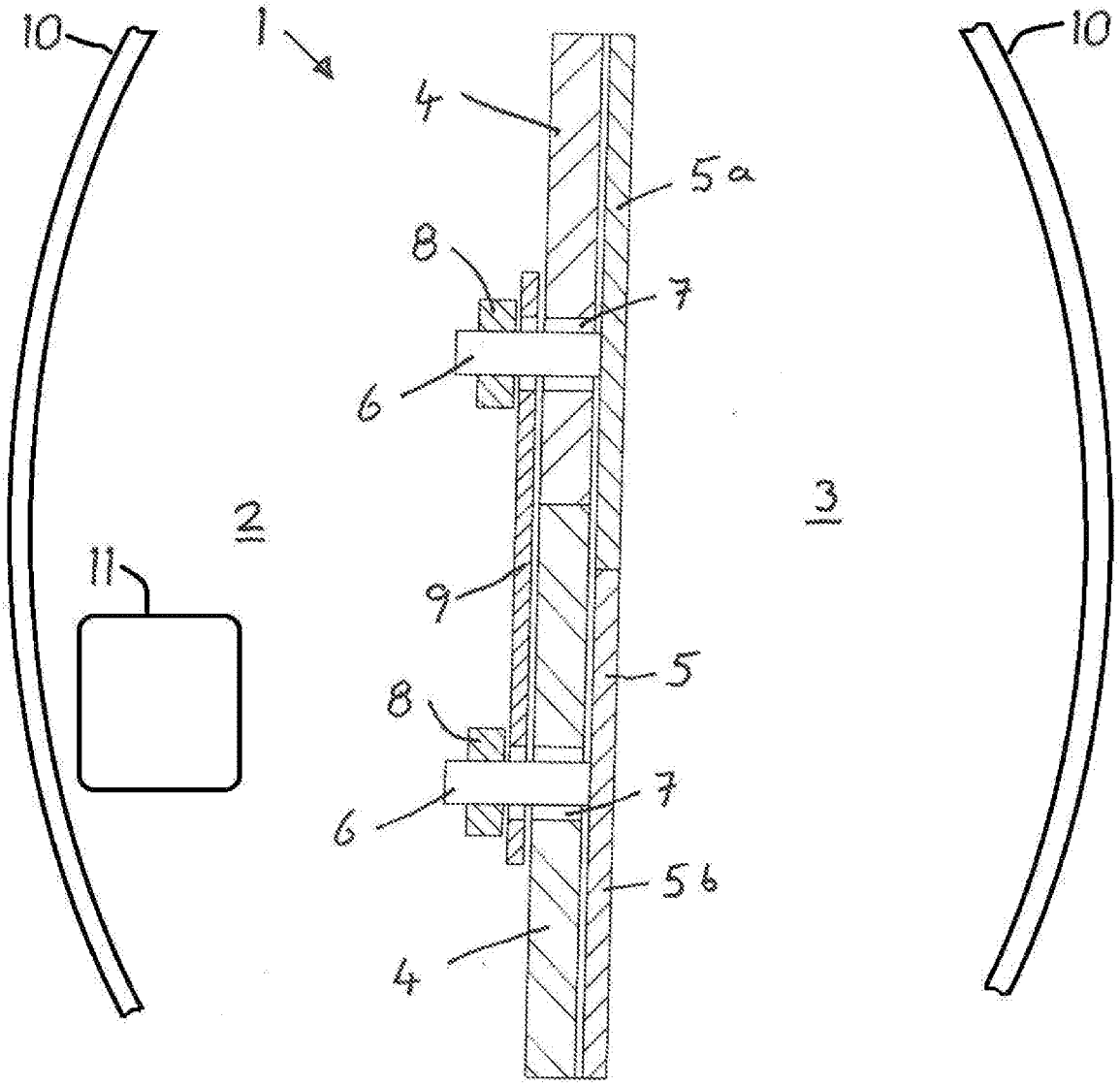
10
1
4
5a
8
7
6
2
3
11
9
5
8
7
6
5b
4
10