[FIG. 1]

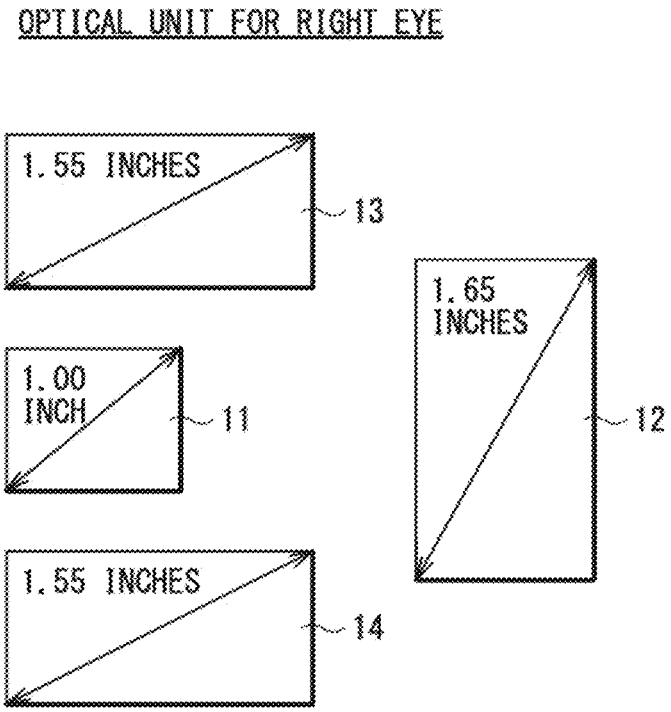
OPTICAL UNIT FOR RIGHT EYE
1.55 INCHES
13
1.65
INCHES
12
1.00
INCH
11
1.55 INCHES
14