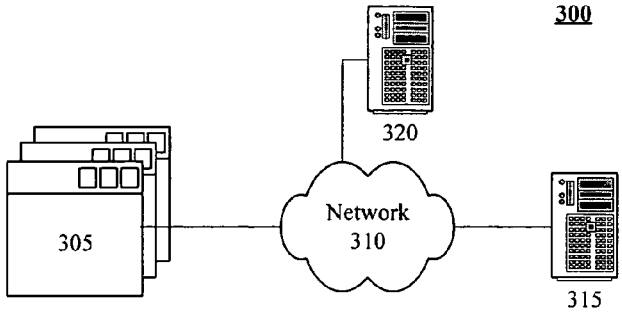
300
320
305
Network
310
315

FIG. 3

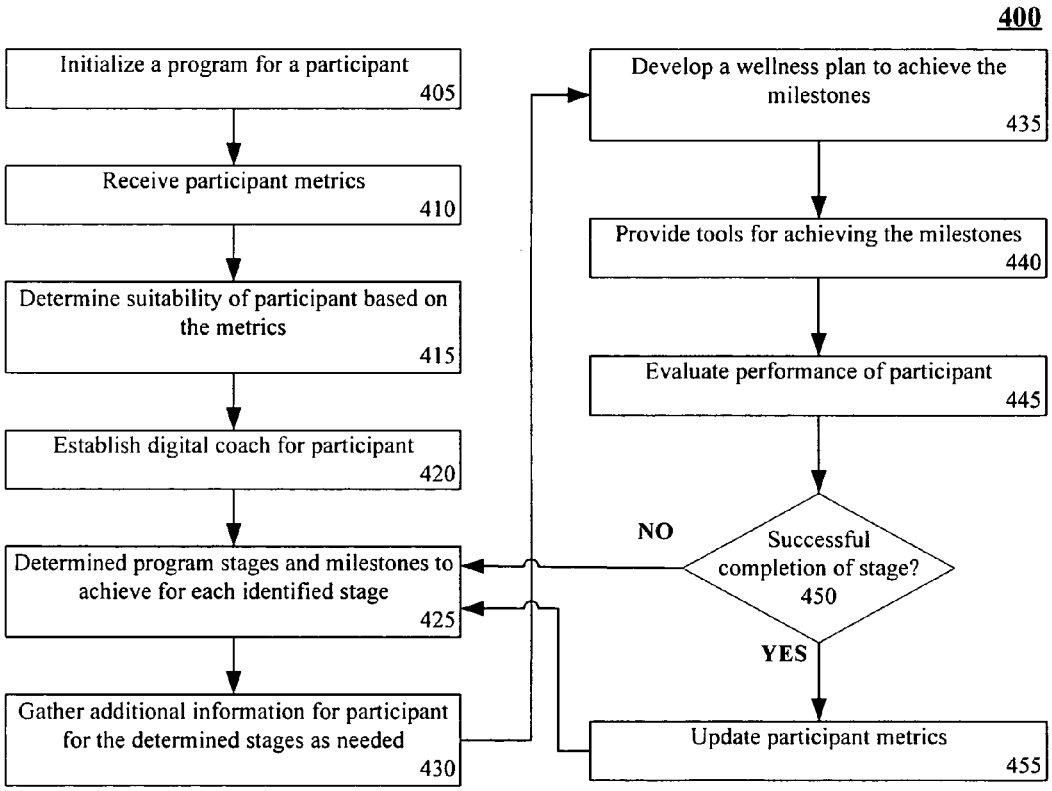
400
Initialize a program for a participant
405
Receive participant metrics
410
Determine suitability of participant based on the metrics
415
Establish digital coach for participant
420
Determined program stages and milestones to achieve for each identified stage
425
Gather additional information for participant for the determined stages as needed
430
Develop a wellness plan to achieve the milestones
435
Provide tools for achieving the milestones
440
Evaluate performance of participant
445
Successful completion of stage?
450
NO
YES
Update participant metrics
455

FIG. 4