Fig. 1

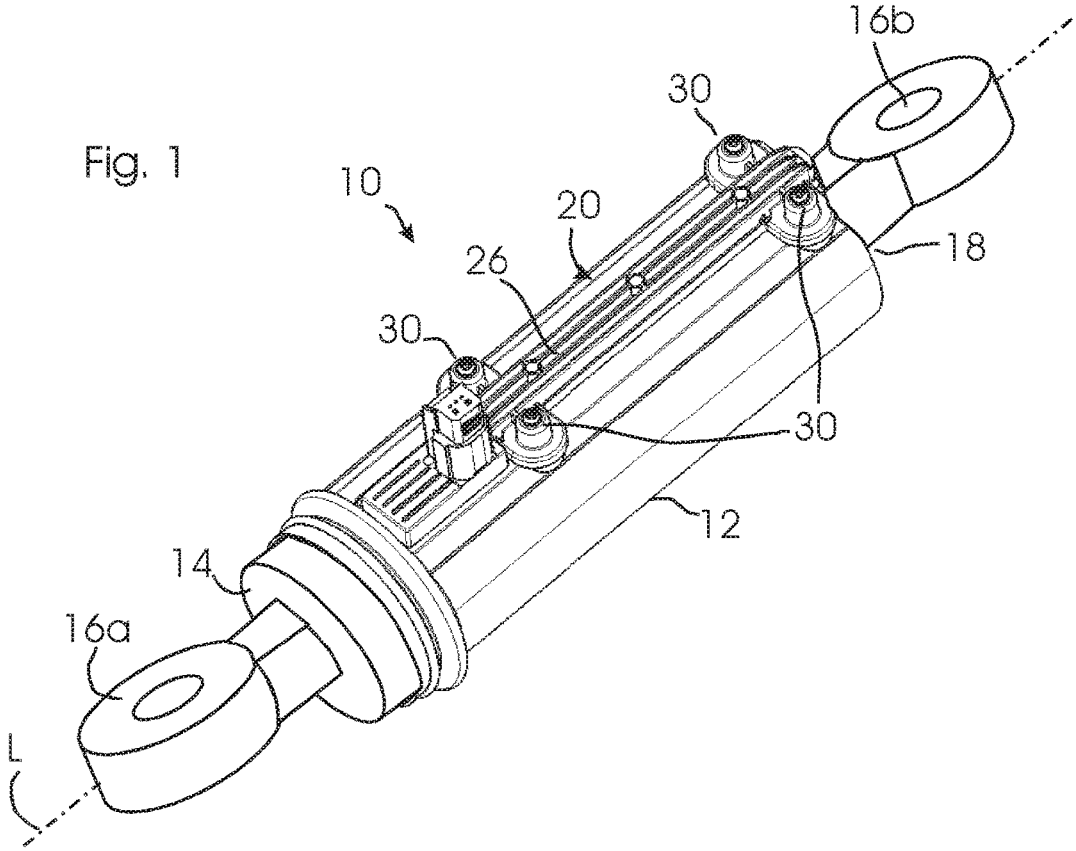
16b
30
10
20
26
18
30
30
12
14
16a
L

Fig. 2

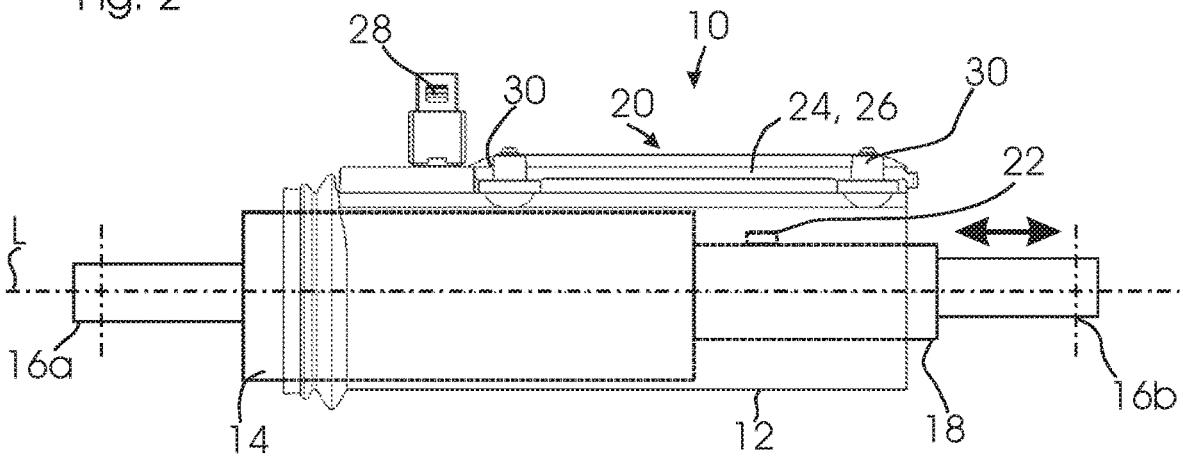
28
10
30
20
24, 26
30
22
L
16a
14
12
18
16b