US 20200291495A1

(19) United States

(12) Patent Application Publication

KOLBE et al.

(10) Pub. No.: US 2020/0291495 A1

(43) Pub. Date: Sep. 17, 2020

(54) **USE OF A Q&P STEEL FOR PRODUCING A SHAPED COMPONENT FOR HIGH-WEAR APPLICATIONS**

(71) Applicants: **ThyssenKrupp Steel Europe AG**, Duisburg (DE); **thyssenkrupp AG**, Essen (DE)

(72) Inventors: **Nina KOLBE**, Bochum (DE); **Patrick KUHN**, Kamen (DE); **Clemens LATUSKE**, Dusseldorf (DE); **Richard Georg THIESSEN**, JK Malden (NL)

(73) Assignees: **ThyssenKrupp Steel Europe AG**, Duisburg (DE); **thyssenkrupp AG**, Essen (DE)

(21) Appl. No.: **16/640,147**

(22) PCT Filed: **Aug. 22, 2017**

(86) PCT No.: **PCT/EP2017/071147**

§ 371 (c)(1),
(2) Date: **Feb. 19, 2020**

Publication Classification

(51) **Int. Cl.**

C21D 1/18	(2006.01)
C22C 38/00	(2006.01)
C22C 38/02	(2006.01)
C22C 38/04	(2006.01)
C22C 38/06	(2006.01)
C23G 1/00	(2006.01)
C25D 3/22	(2006.01)
C23C 28/00	(2006.01)

(52) **U.S. Cl.**

CPC ***C21D 1/18*** (2013.01); ***C22C 38/001*** (2013.01); ***C22C 38/02*** (2013.01); ***C22C 38/04*** (2013.01); ***C22C 38/06*** (2013.01); ***C23G 1/00*** (2013.01); *C21D 2211/008* (2013.01); ***C23C 28/00*** (2013.01); *C21D 2211/001* (2013.01); *C21D 2211/002* (2013.01); *C21D 2211/003* (2013.01); *C21D 2211/005* (2013.01); ***C25D 3/22*** (2013.01)

(57) **ABSTRACT**
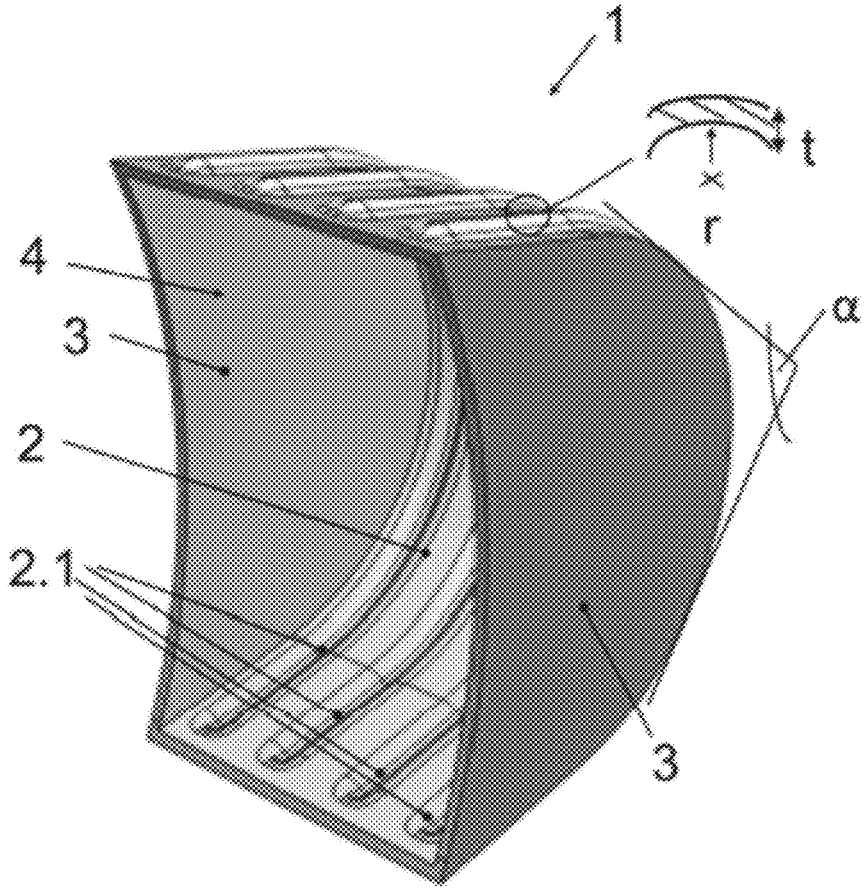
The invention relates to the use of a Q&P steel for production of a formed component (**2**) for high-wear applications, wherein the Q&P steel has a hardness of at least 230 HB, especially at least 300 HB, preferably at least 370 HB, and a bending angle α of at least 60°, especially at least 75°, preferably at least 85°, determined to VDA238-100, and/or a bending ratio of r/t<2.5, especially r/t<2.0, preferably r/t<1.5, where t corresponds to the material thickness of the steel and r to the (inner) bending radius of the steel.