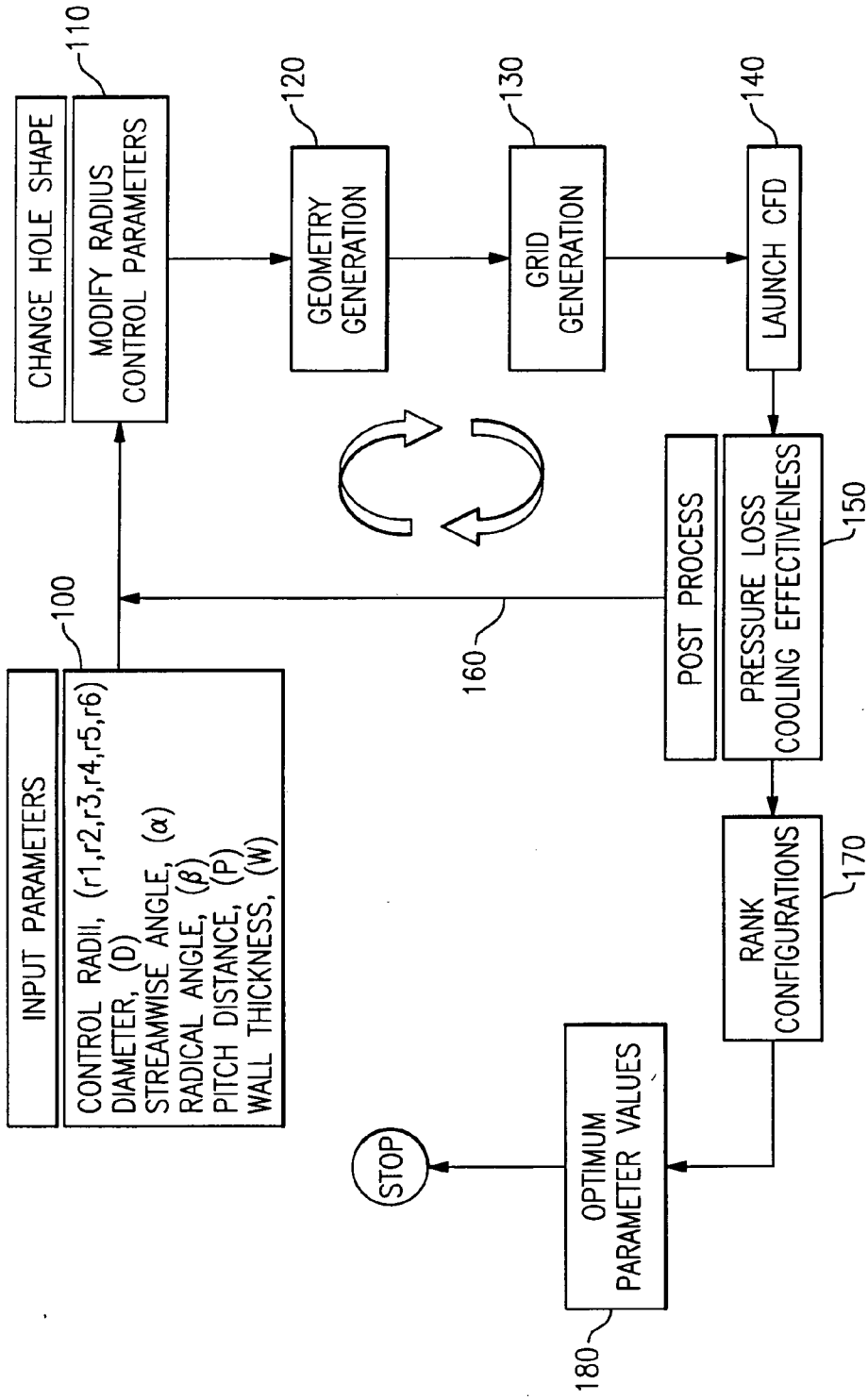
INPUT PARAMETERS
CONTROL RADII, (r1,r2,r3,r4,r5,r6)
DIAMETER, (D)
STREAMWISE ANGLE, (α)
RADICAL ANGLE, (β)
PITCH DISTANCE, (P)
WALL THICKNESS, (W)
100
CHANGE HOLE SHAPE
MODIFY RADIUS CONTROL PARAMETERS
110
GEOMETRY GENERATION
120
GRID GENERATION
130
LAUNCH CFD
140
PRESSURE LOSS COOLING EFFECTIVENESS
150
POST PROCESS
160
RANK CONFIGURATIONS
170
OPTIMUM PARAMETER VALUES
180
STOP

FIG.6