Figure # 5
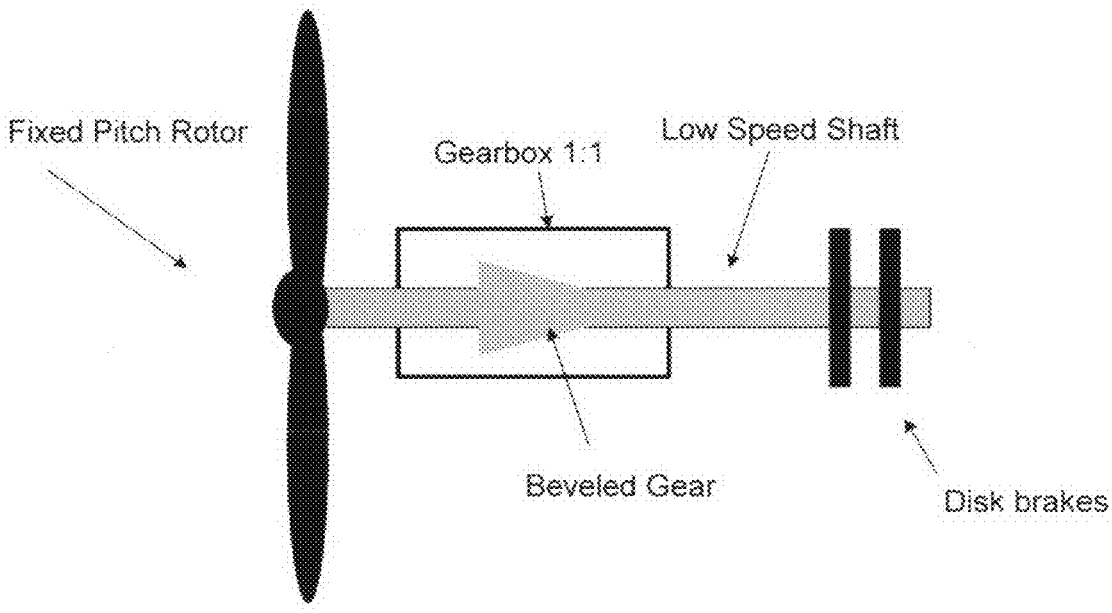
Nacelle
Top Down View