US 20210311296A1

(19) United States

(12) Patent Application Publication

McCoy, II

(10) Pub. No.: US 2021/0311296 A1

(43) Pub. Date: Oct. 7, 2021

(54) **LEVER ASSEMBLY FOR OPTICAL SCOPES**

(71) Applicant: **FLATLINE OPS, INC.**, Bellingham, WA (US)

(72) Inventor: **Charles A. McCoy, II**, New Meadows, ID (US)

(21) Appl. No.: **17/156,944**

(22) Filed: **Jan. 25, 2021**

Related U.S. Application Data

(60) Provisional application No. 62/967,460, filed on Jan. 29, 2020.

Publication Classification

(51) **Int. Cl.**

G02B 23/16 (2006.01)

F41G 1/38 (2006.01)

(52) **U.S. Cl.**

CPC *G02B 23/16* (2013.01); *F41G 1/38* (2013.01)

(57) **ABSTRACT**
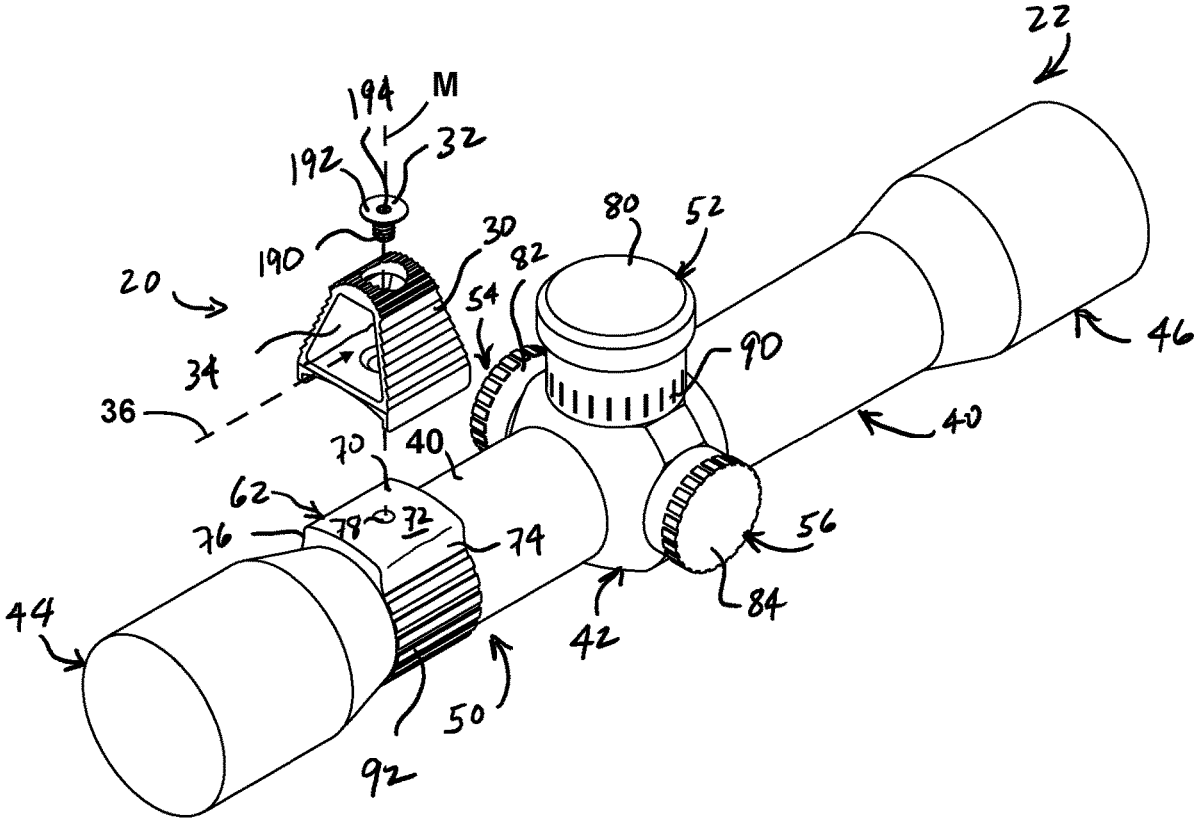
A lever assembly for an optical scope defining a mounting surface, a mounting hole, and indicia, the lever assembly comprising a lever member and a mounting member. The lever member comprises a base portion comprising a base wall defining an engaging surface adapted to engage the mounting surface and an extension portion comprising at least one extension side wall extending from the base wall such that a lever sightline is defined by the base wall and the at least one extension side wall. The mounting member is adapted to secure the base wall to the mounting surface by engaging the mounting hole. The mounting member secures the lever member to the optical scope such that the indicia can be viewed along the lever sightline while the lever member is displaced through a range of movement to adjust the optical scope.