FIG. 1A
(Prior Art)

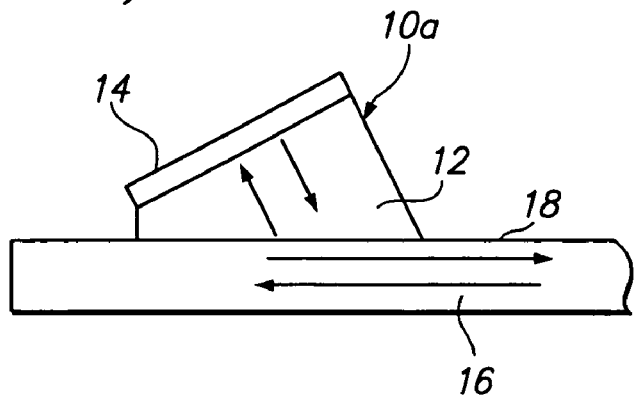

FIG. 1B
(Prior Art)

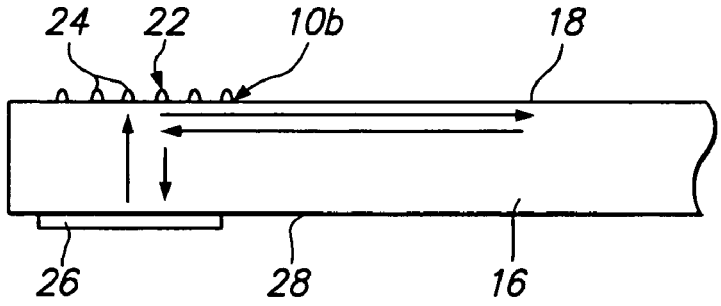
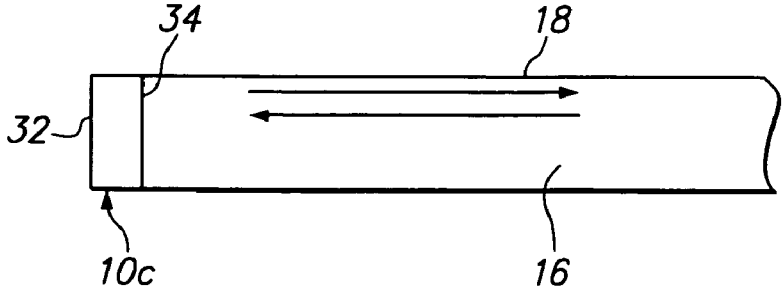
FIG. 1C
(Prior Art)