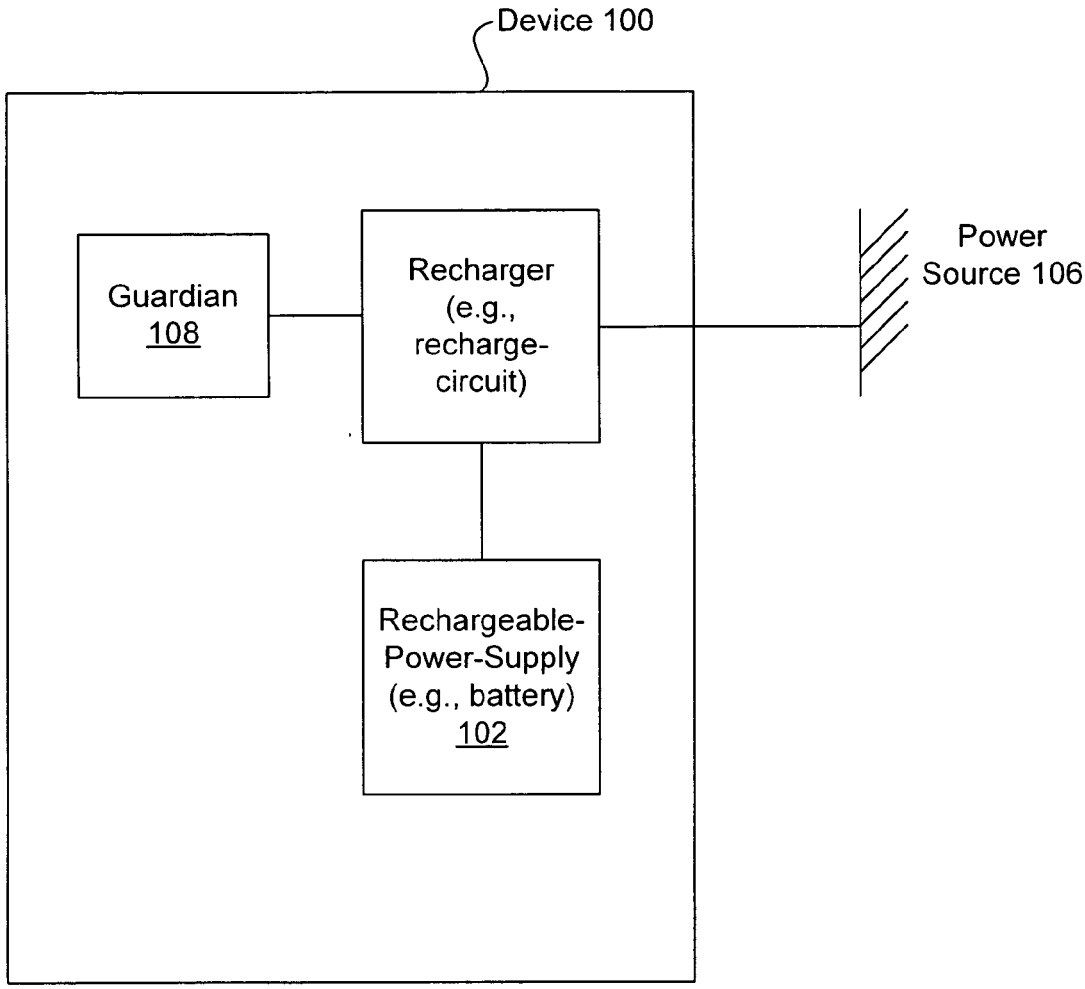
Device 100
Guardian
108
Recharger
(e.g.,
recharge-
circuit)
Power
Source 106
Rechargeable-
Power-Supply
(e.g., battery)
102

Figure 1A