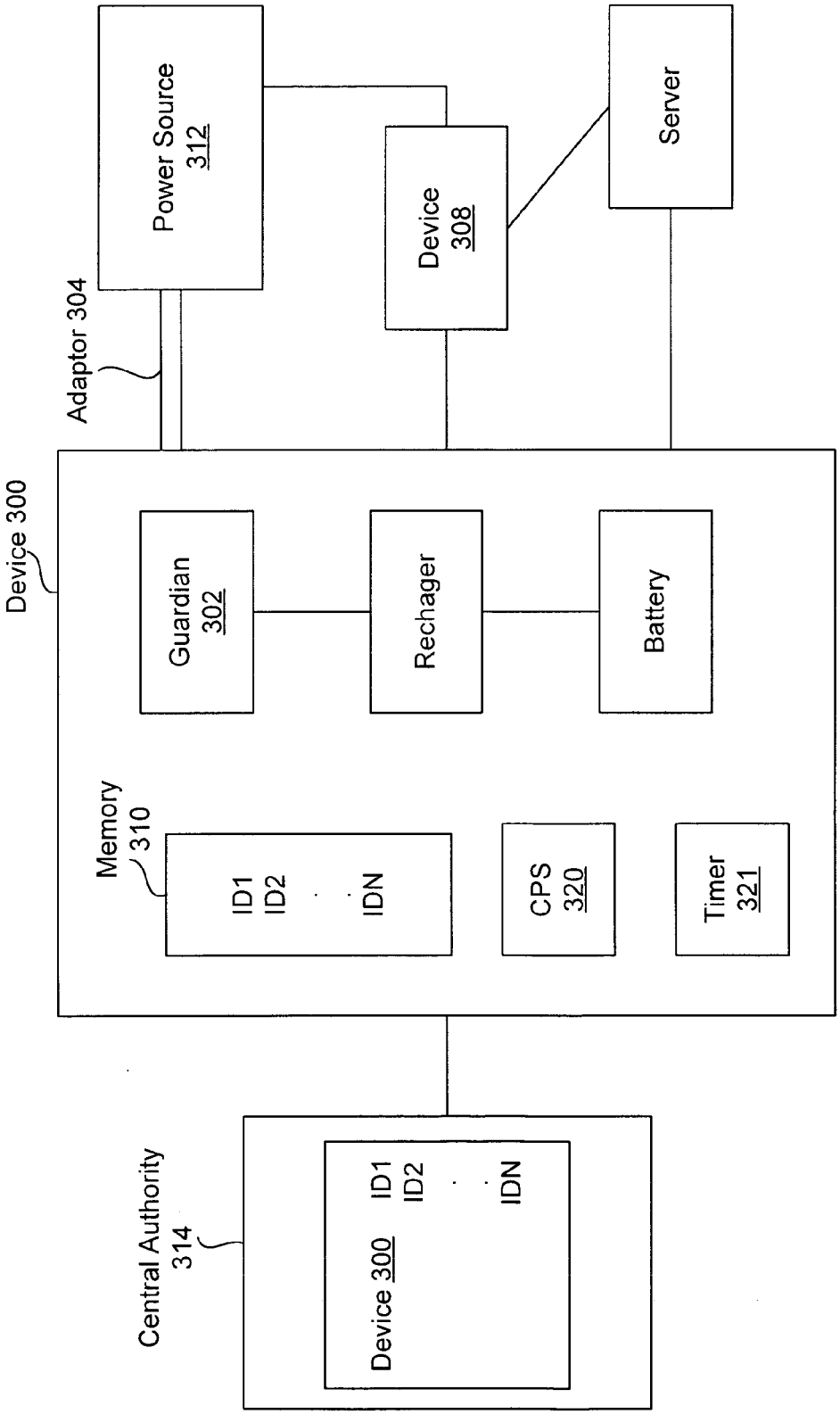
Power Source
312
Server
Device
308
Adaptor 304
Device 300
Guardian
302
Rechager
Battery
Memory
310
ID1
ID2
IDN
CPS
320
Timer
321
Central Authority
314
Device 300
ID1
ID2
IDN

Figure 3A