US 20220187609A1

(19) United States

(12) Patent Application Publication

Snyder et al.

(10) Pub. No.: US 2022/0187609 A1

(43) Pub. Date: Jun. 16, 2022

(54) **HEAD-MOUNTED DISPLAY**

(71) Applicant: **Valve Corporation**, Bellevue, WA (US)

(72) Inventors: **Keaton Snyder**, Donald, OR (US); **Isaac Frazier**, Portland, OR (US); **Jos Jacobs**, Sherwood, OR (US); **Carl Samuel Conlee, IV**, Seattle, WA (US); **Ivan A. McCracken**, Bellevue, WA (US); **Clement Gallois**, Seattle, WA (US); **John Underwood**, Portland, OR (US); **William Winters**, Portland, OR (US); **Darryl Jensen**, Hillsboro, OR (US)

(21) Appl. No.: **17/552,051**

(22) Filed: **Dec. 15, 2021**

Related U.S. Application Data

(60) Provisional application No. 63/125,503, filed on Dec. 15, 2020.

Publication Classification

(51) **Int. Cl.**

G02B 27/01 (2006.01)

H04R 1/02 (2006.01)

(52) **U.S. Cl.**

CPC ***G02B 27/0176*** (2013.01); ***H04R 1/028*** (2013.01); *H04R 2499/15* (2013.01); *G02B 2027/0161* (2013.01); *G02B 2027/0154* (2013.01)

(57) **ABSTRACT**

A head-mounted display includes a front having a display housing and a back having a rear housing. A first member extends between the front and the back and is adjustable via an actuation of a first rotatable actuator and a first cabling mechanism. A second member extends between the front and the back and is adjustable via an actuation of a second rotatable actuator and a second cabling mechanism. A third member extends between the front and the back and is adjustable via the actuation of the second rotatable actuator and a third cabling mechanism.

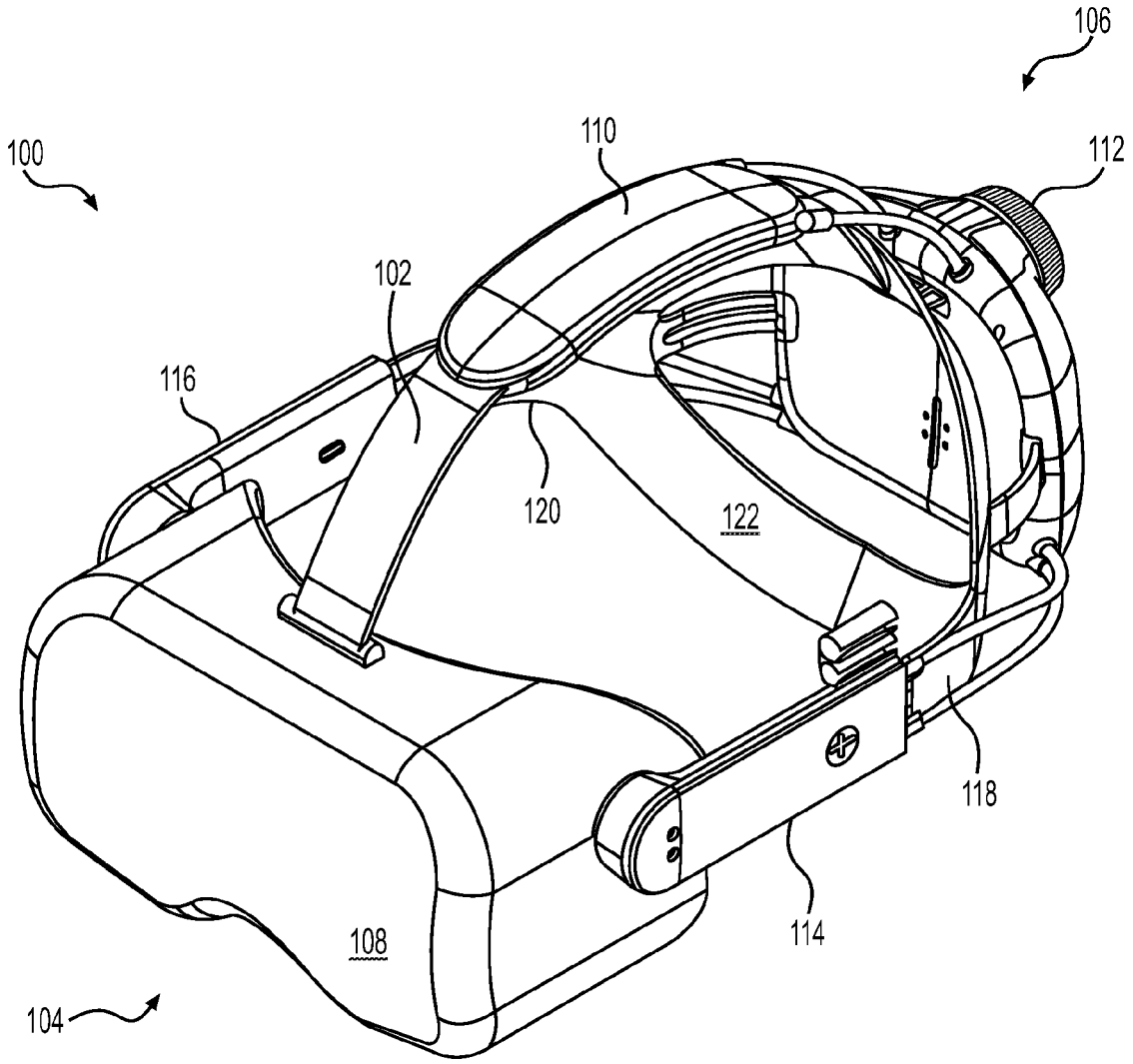

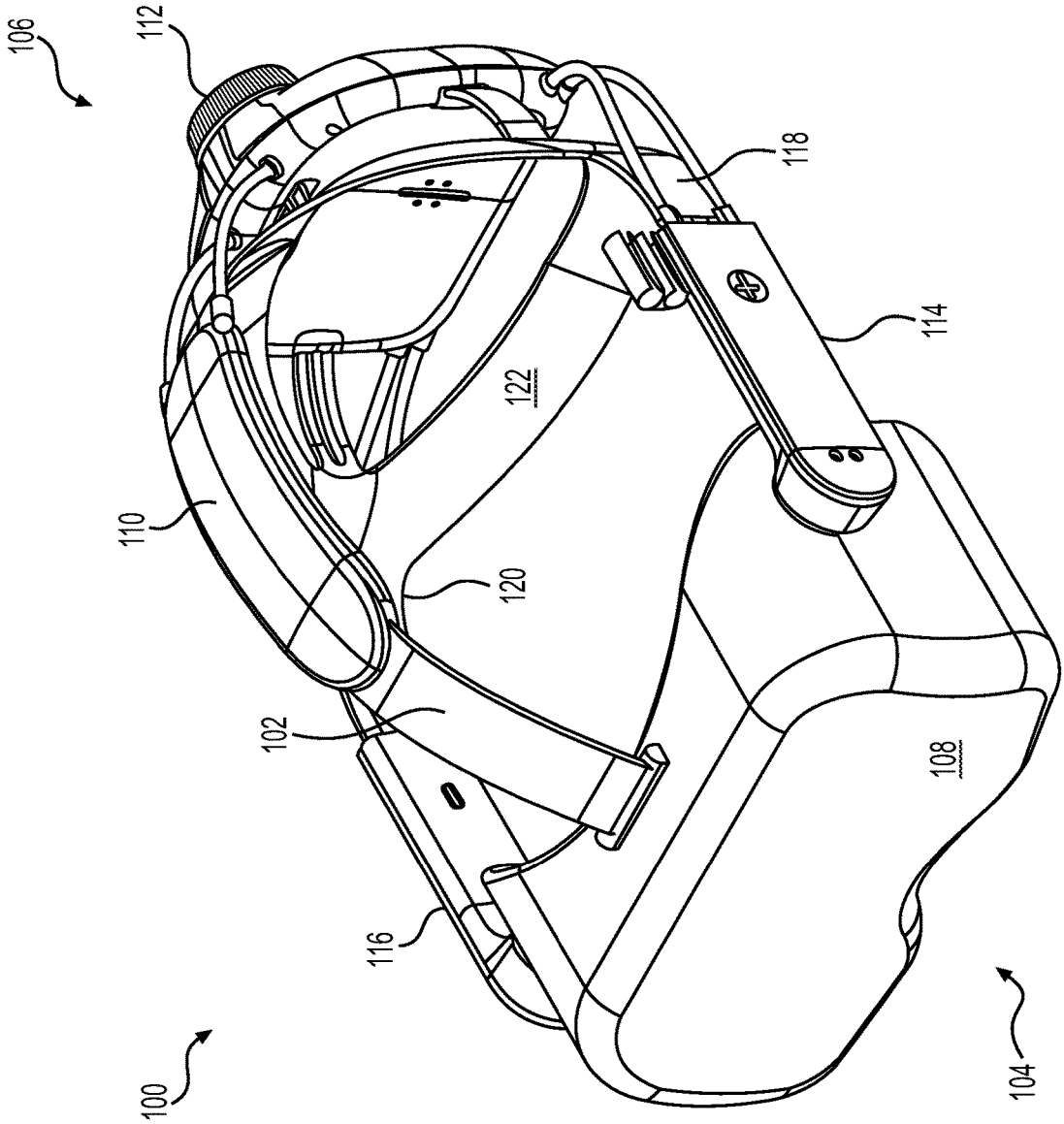

FIG. 1

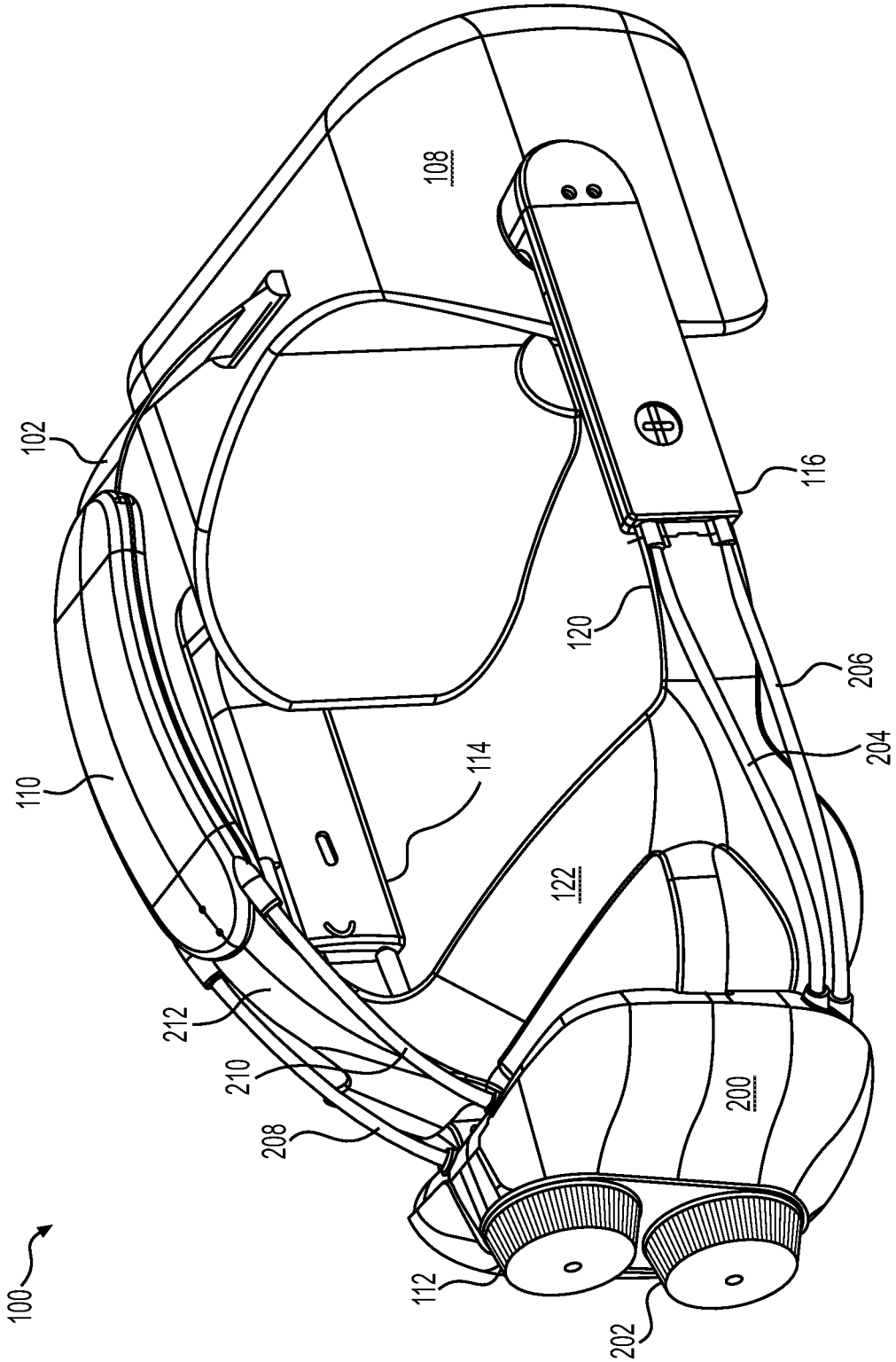

FIG. 2

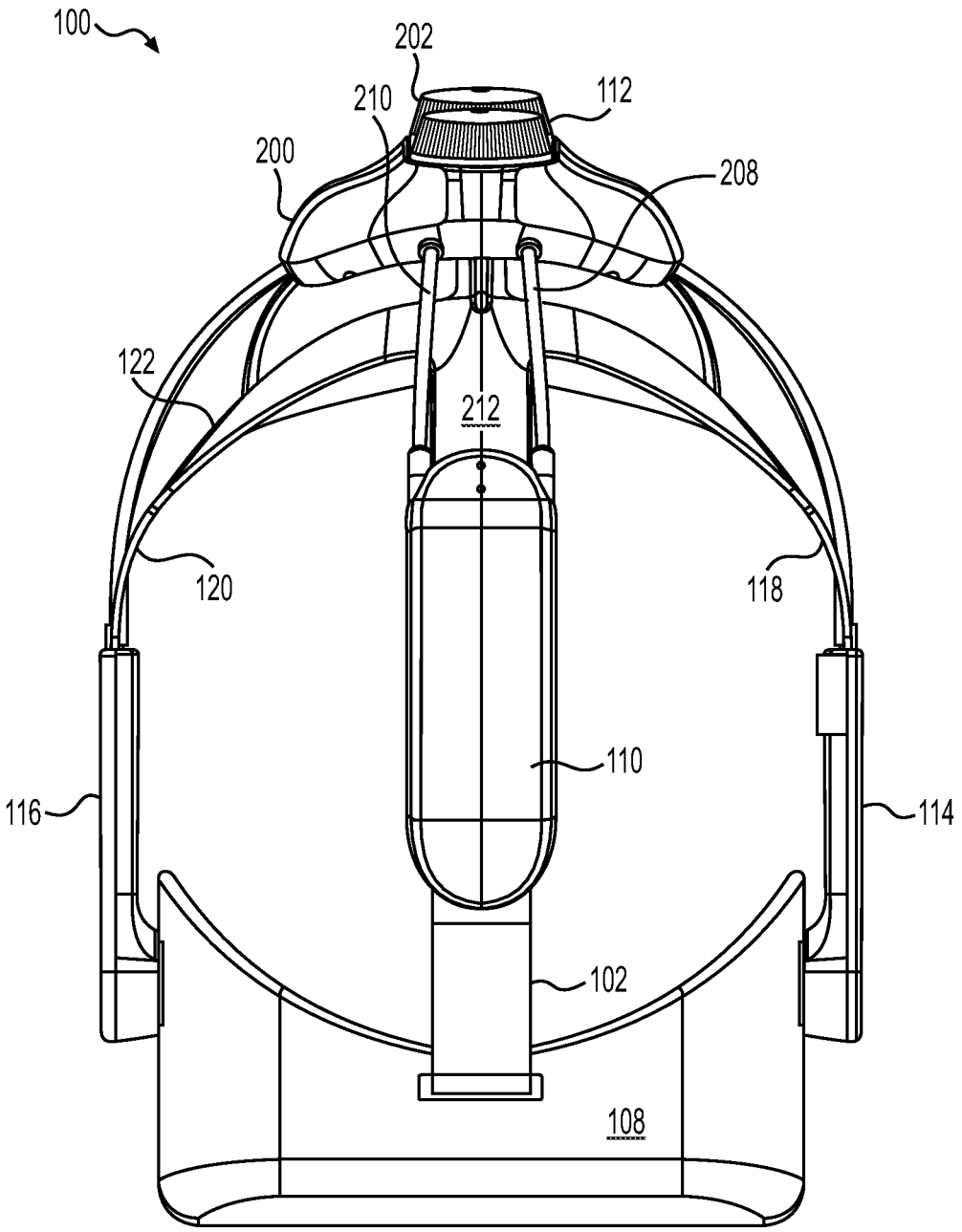

FIG. 3

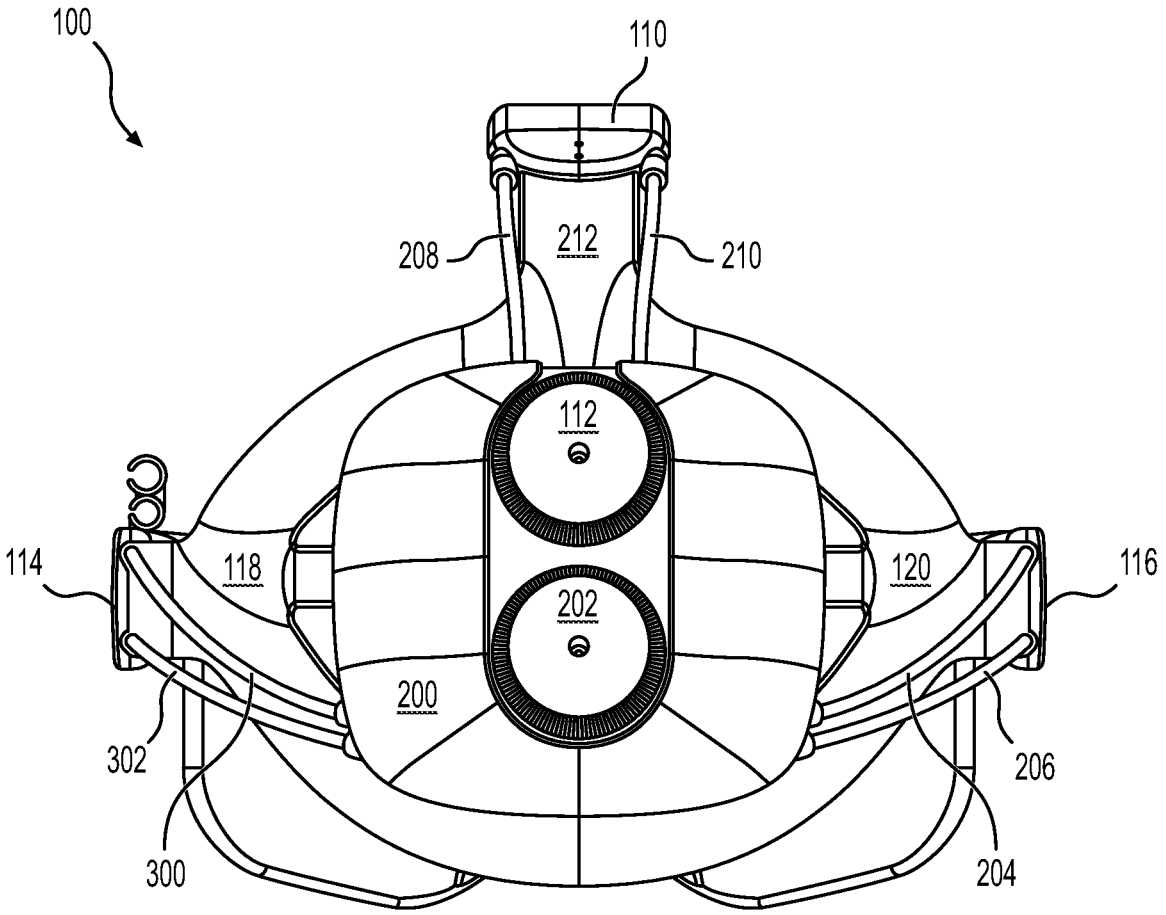

FIG. 4

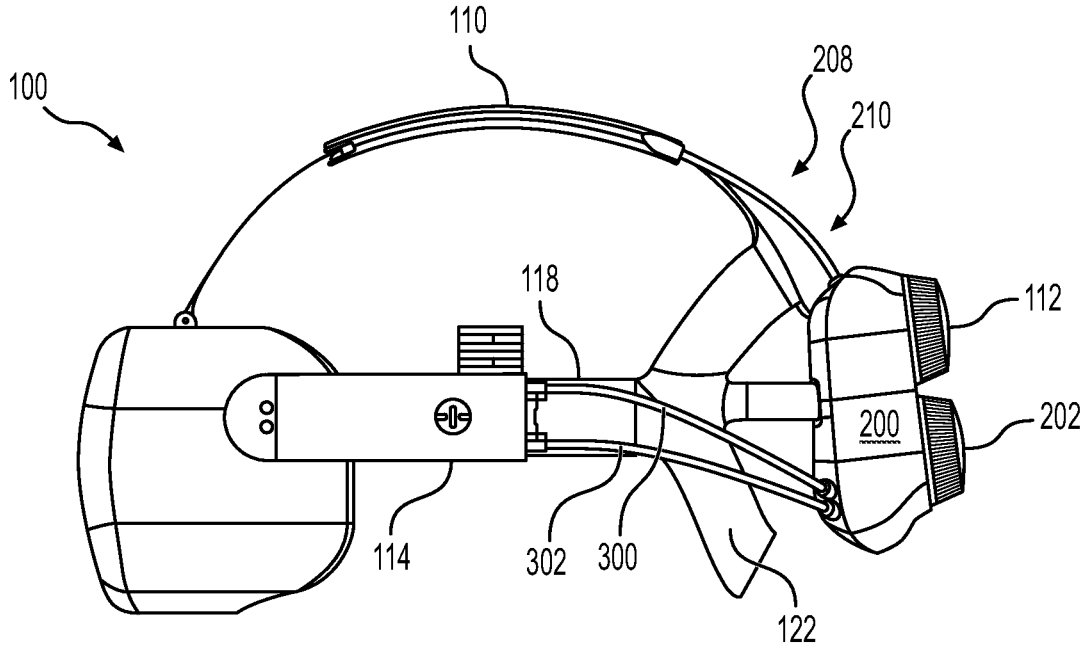
110
100
208
210
118
112
200
202
114
302
300
122

FIG. 5A

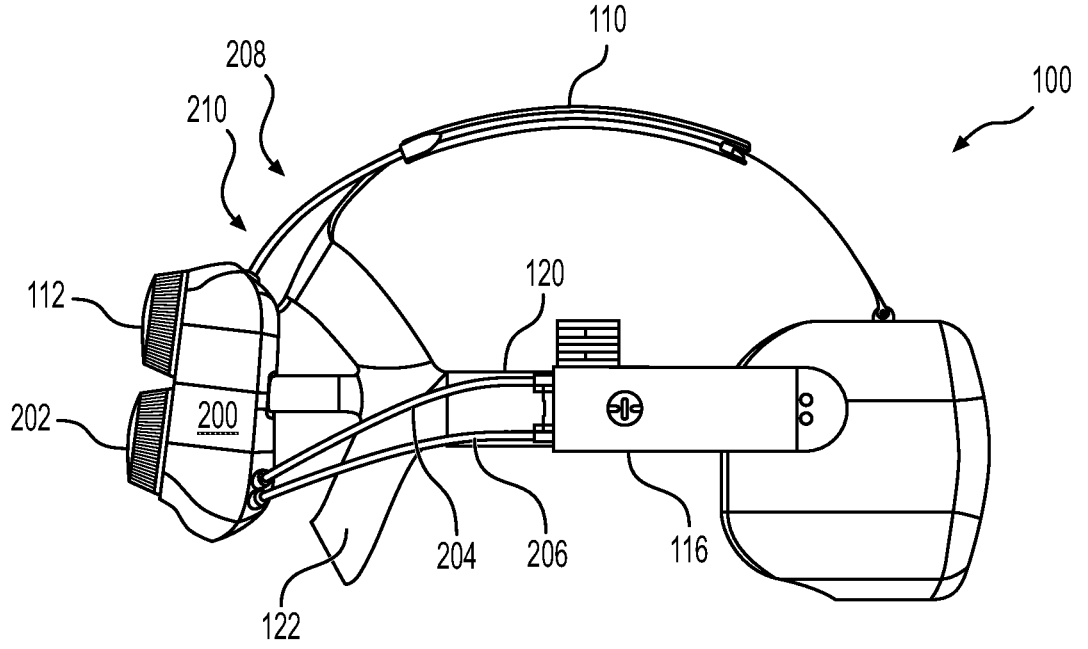
110
208
100
210
120
112
200
202
204
206
116
122

FIG. 5B

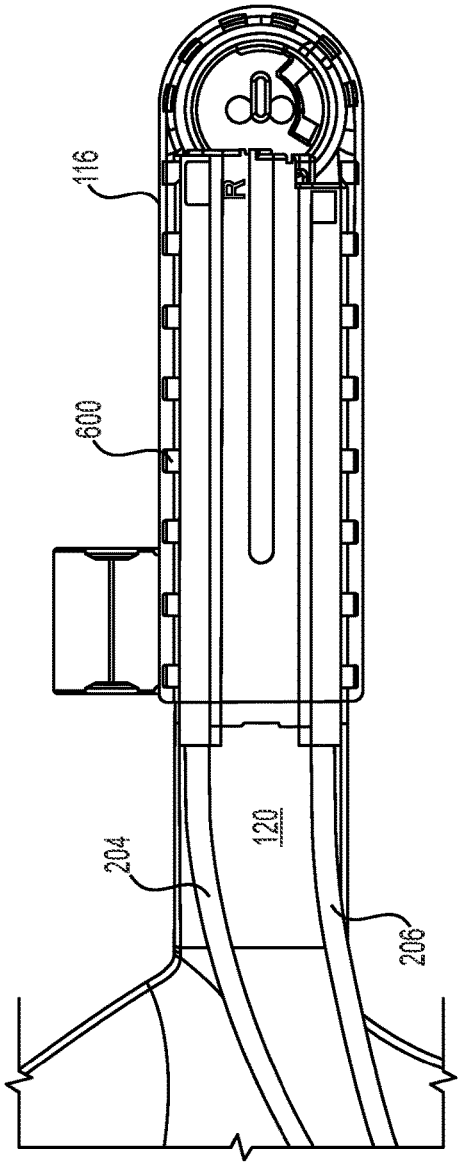

FIG. 6A

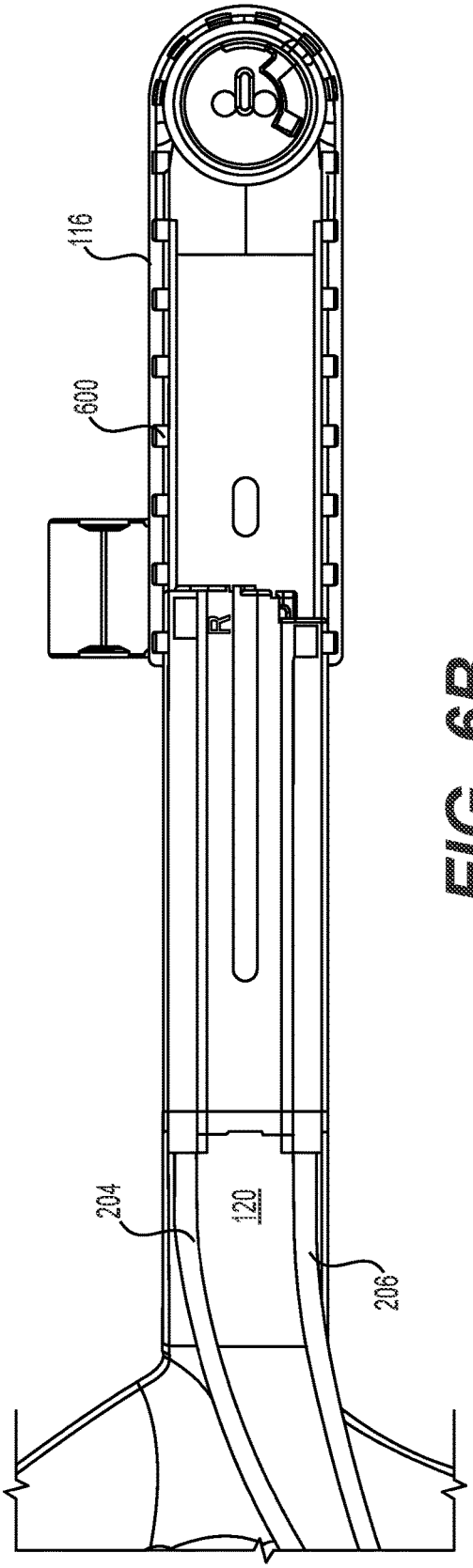

FIG. 6B

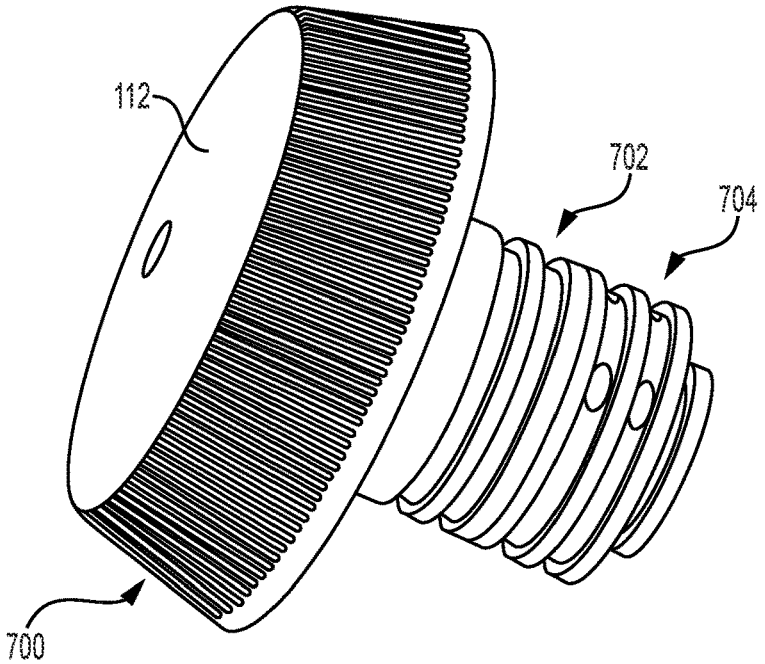

FIG. 7A

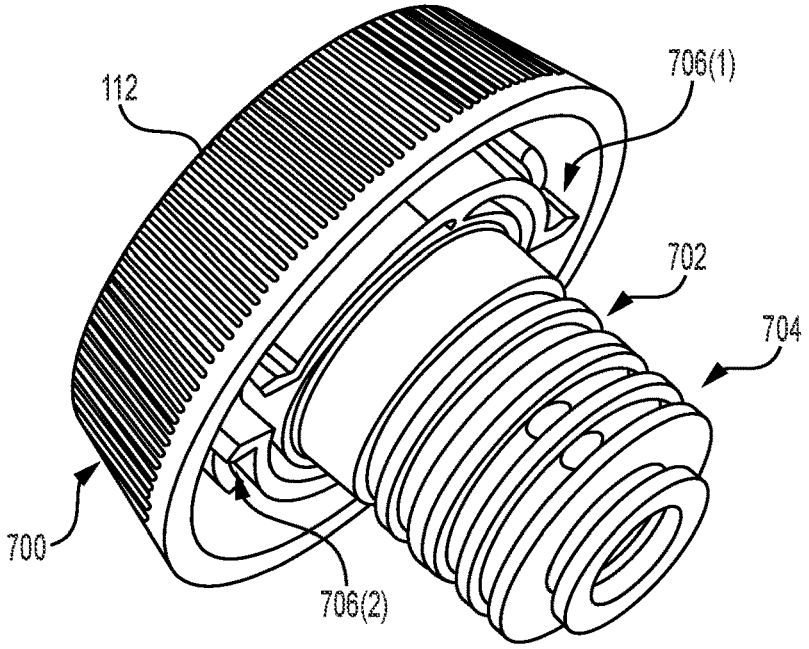

FIG. 7B

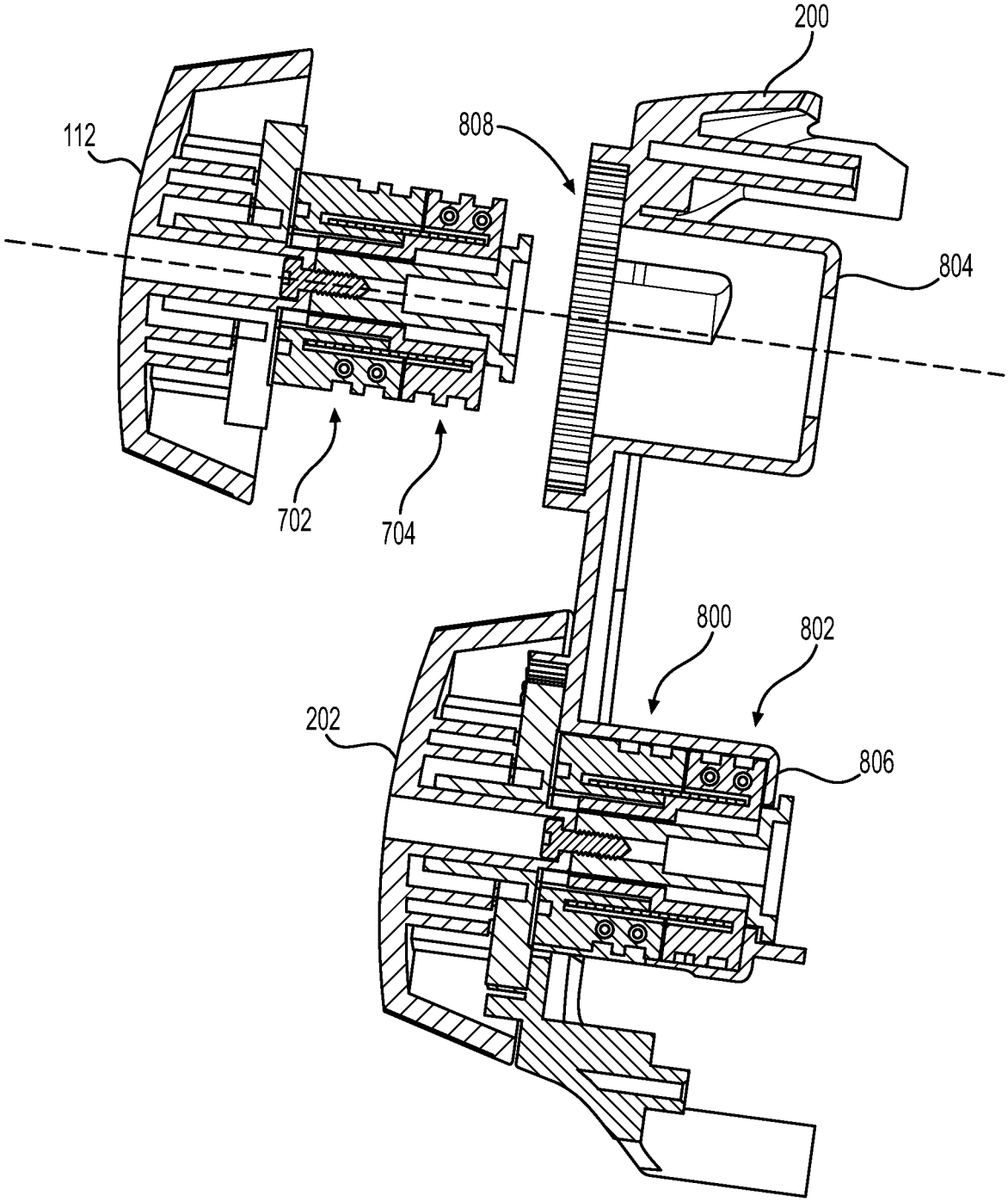

FIG. 8

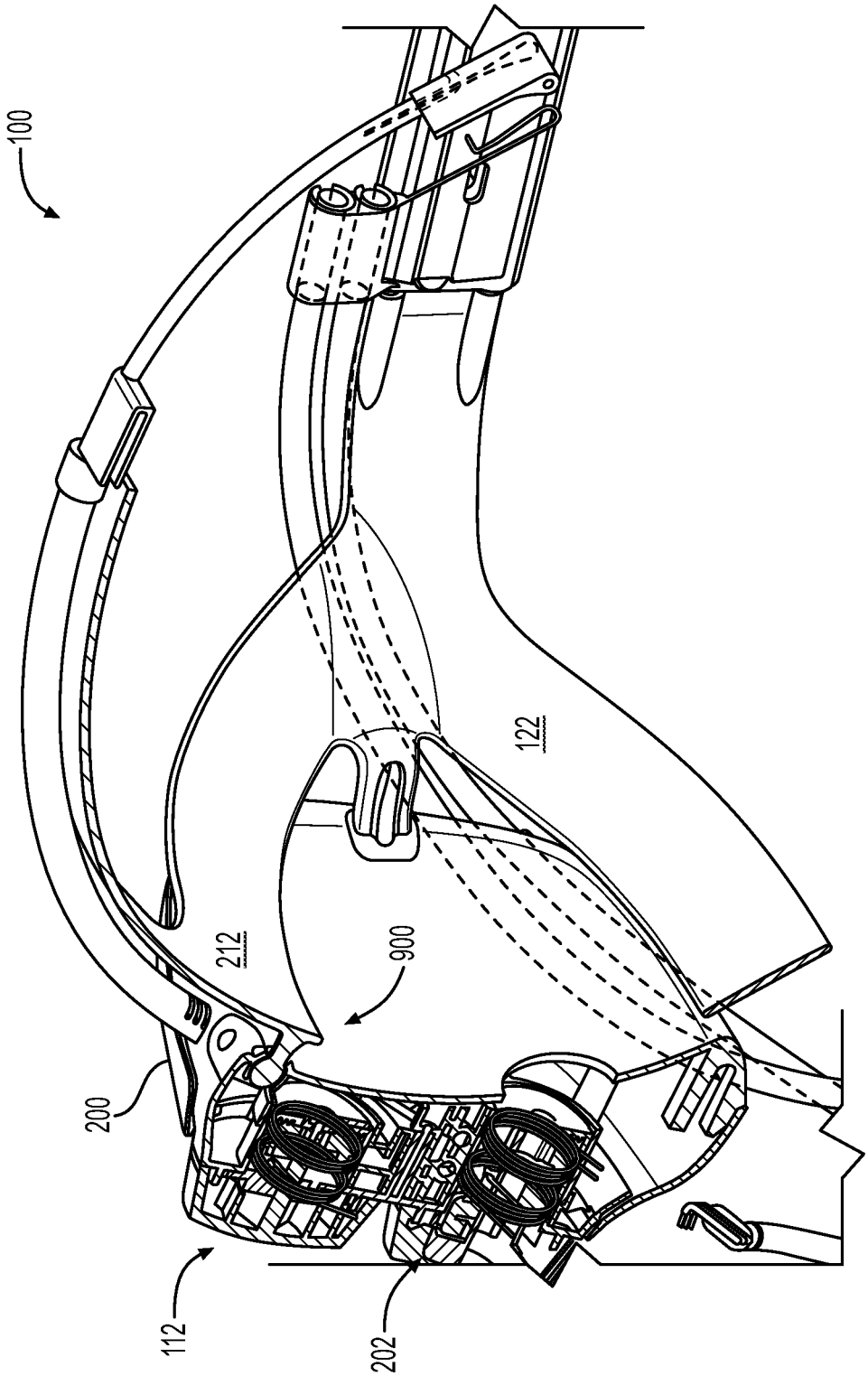

FIG. 9

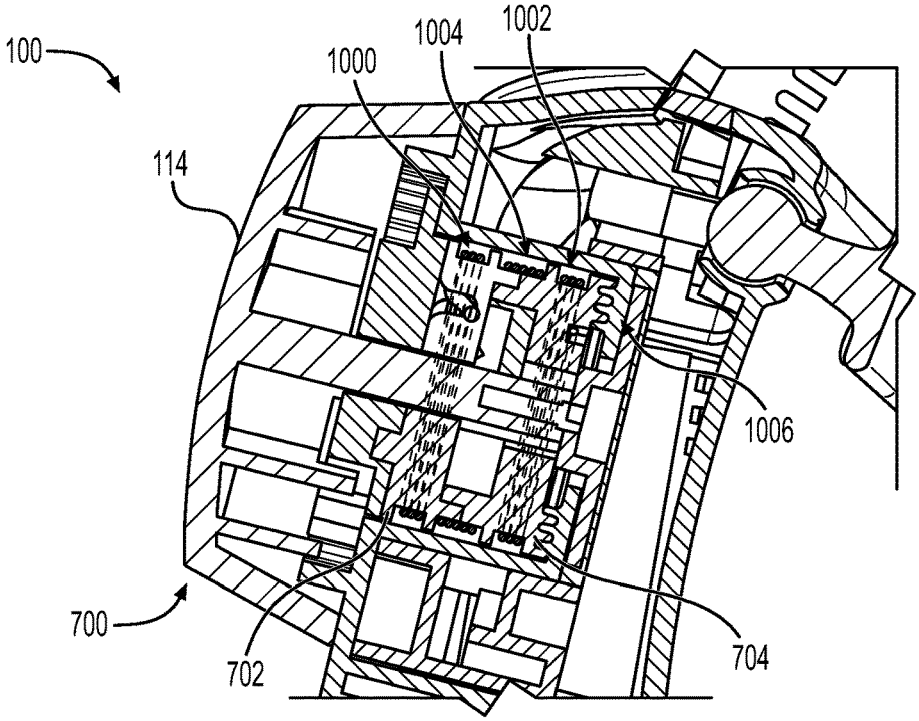

FIG. 10A

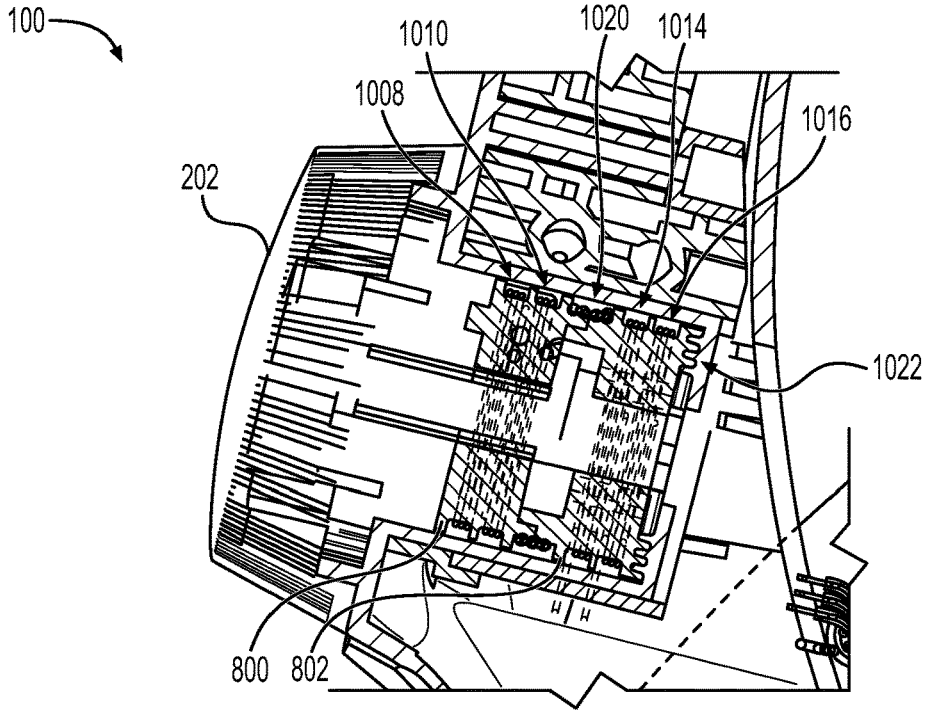

FIG. 10B

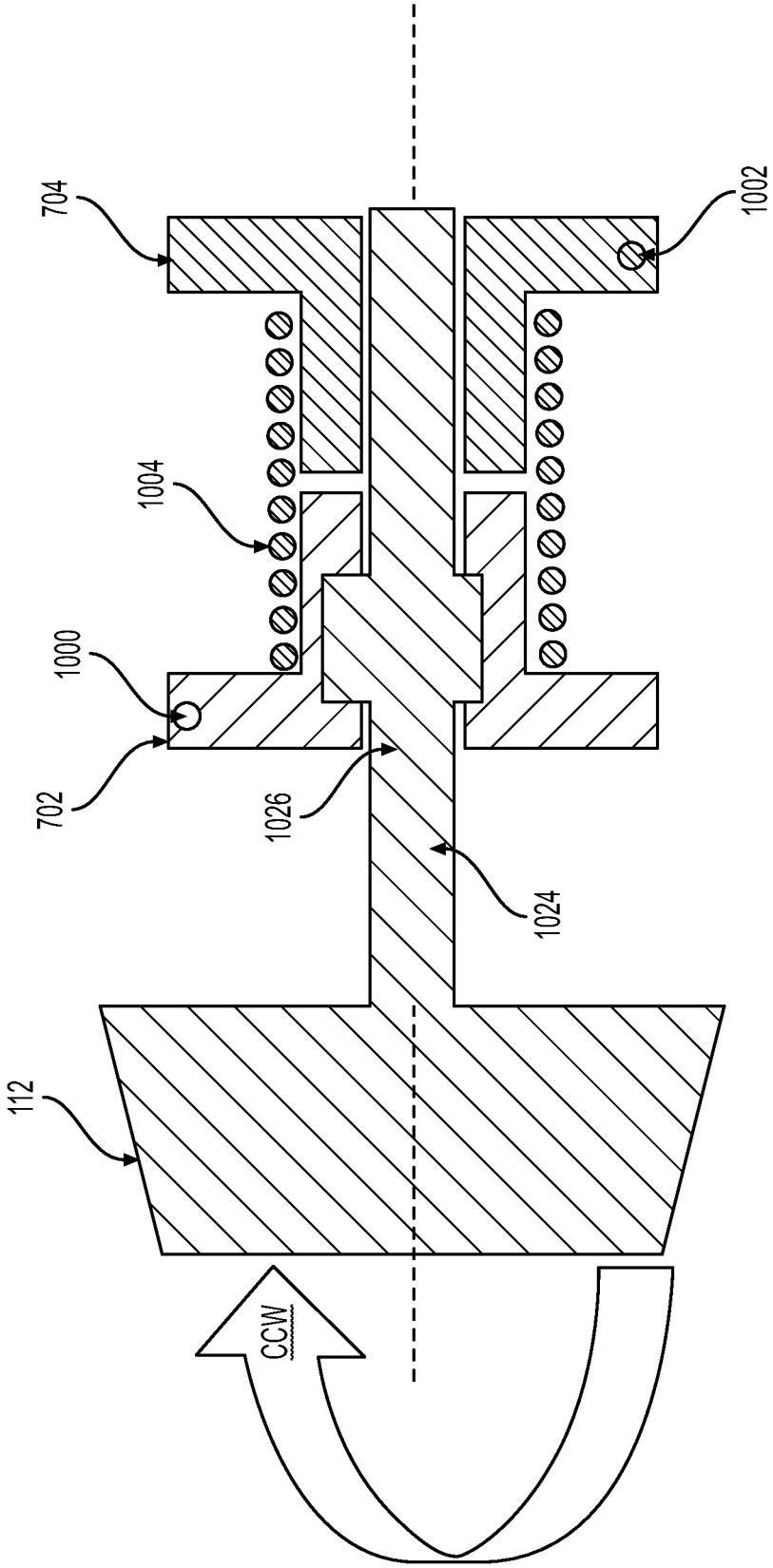

FIG. 10C

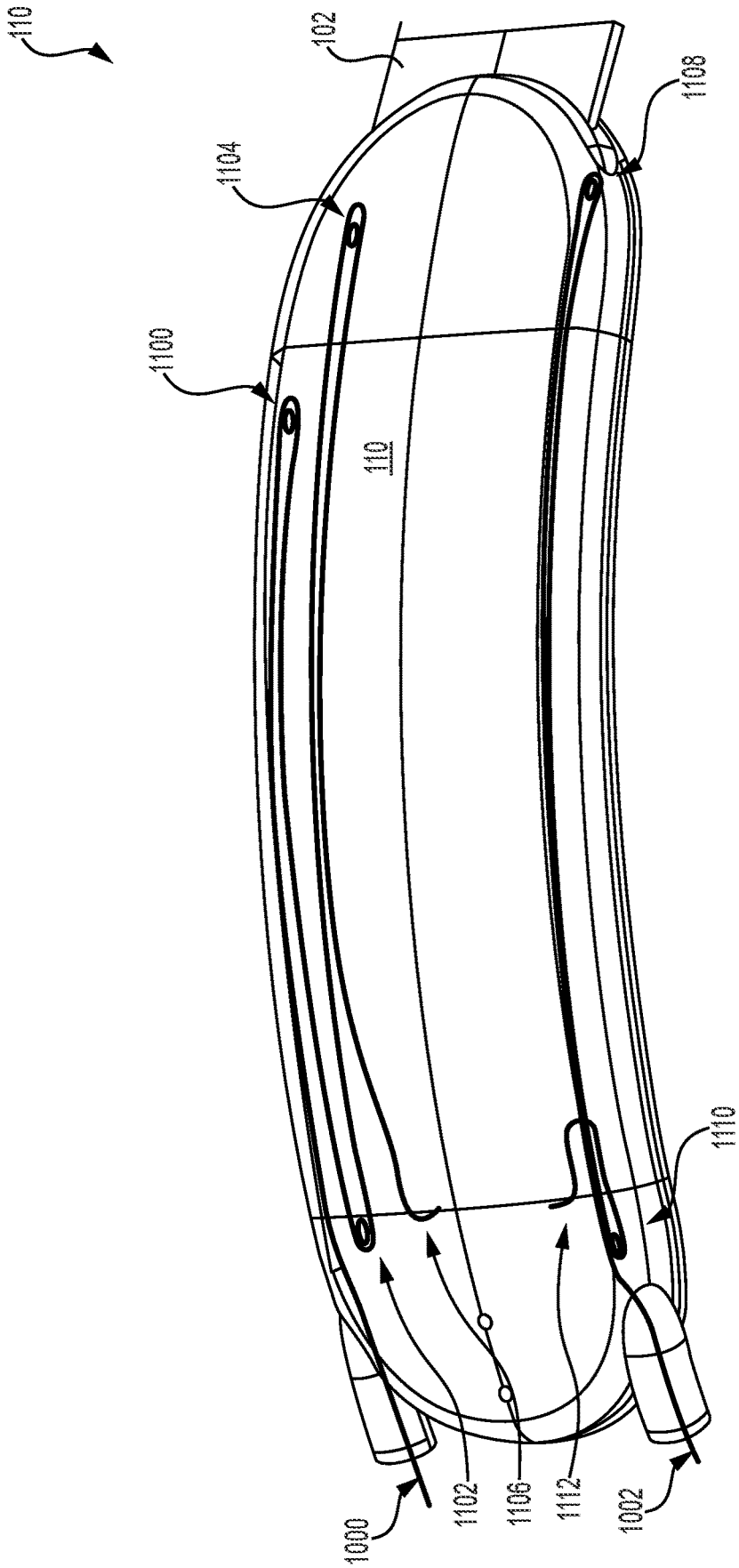

FIG. 11

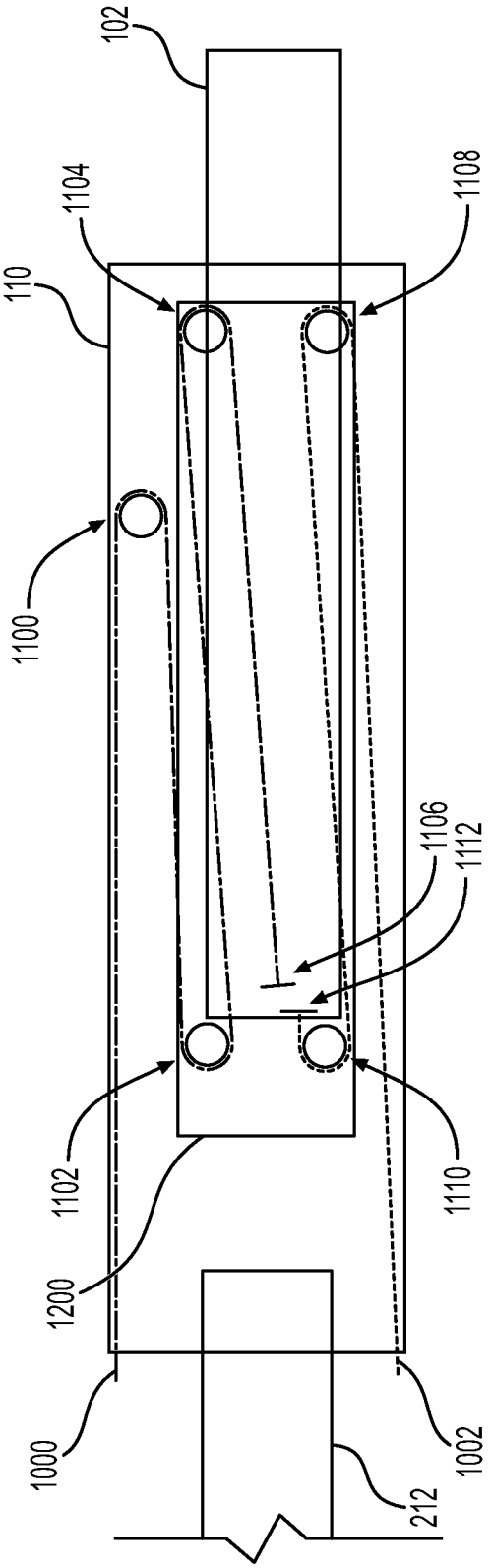

FIG. 12

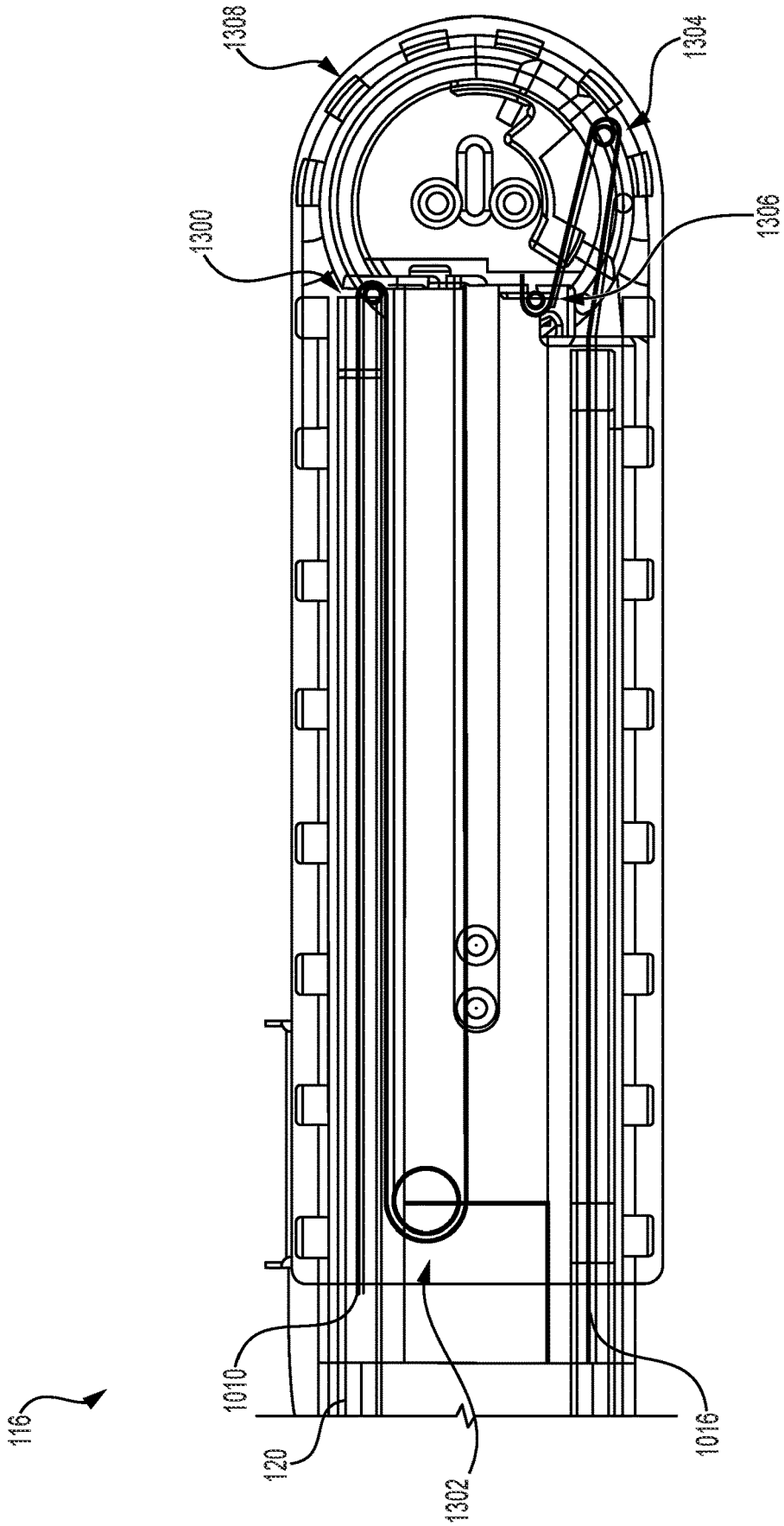

FIG. 13

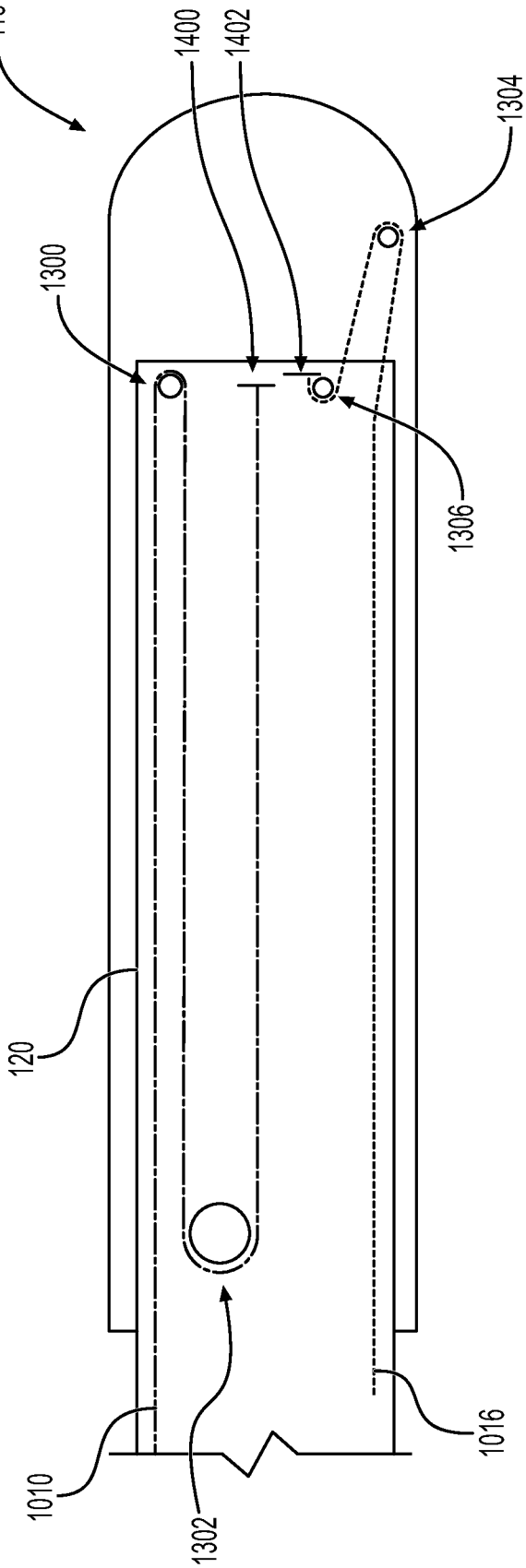

FIG. 14

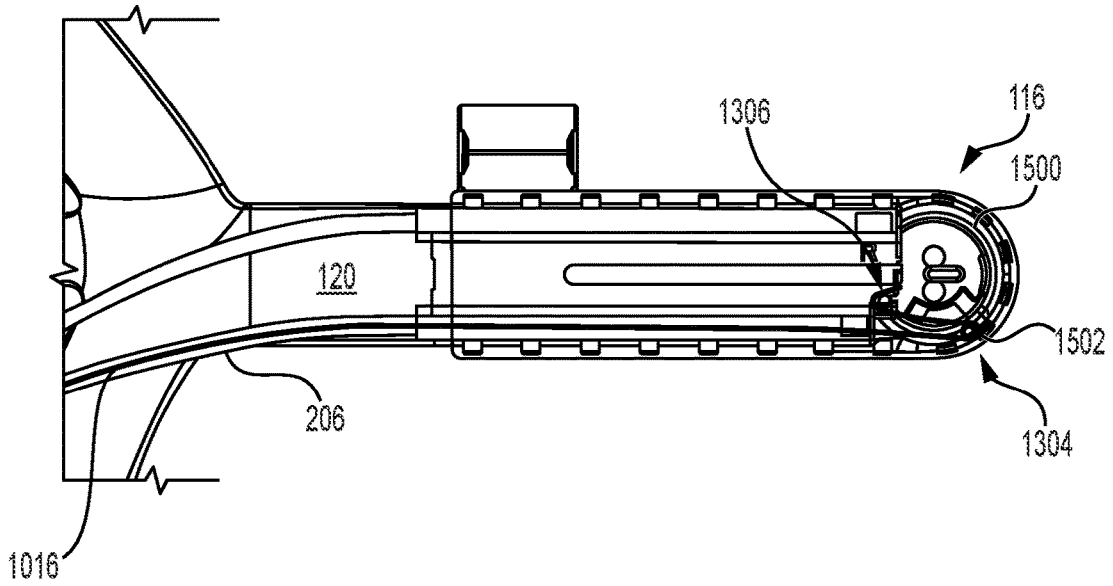

FIG. 15A

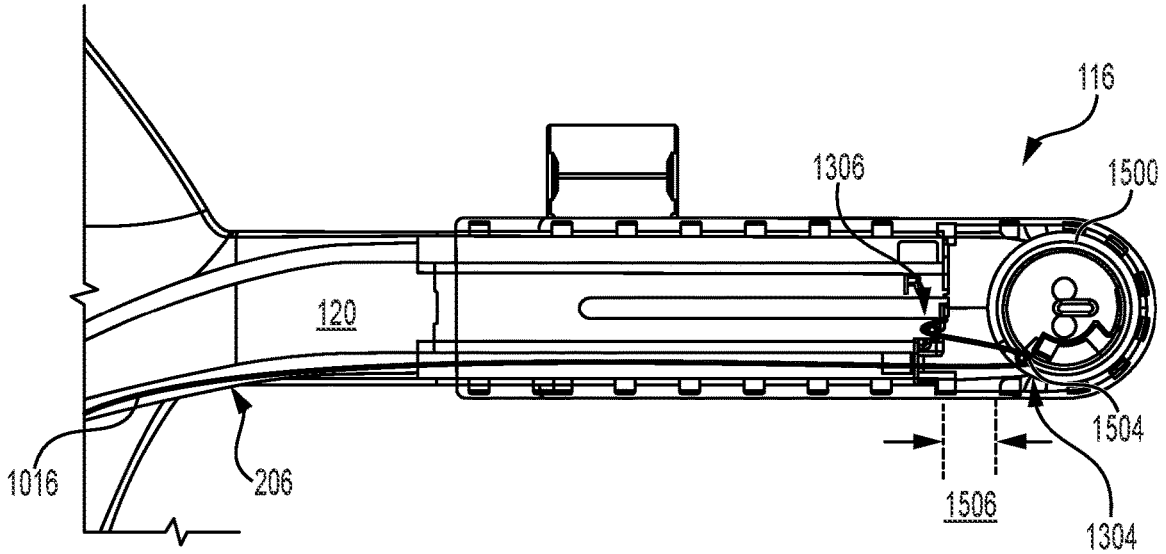

FIG. 15B

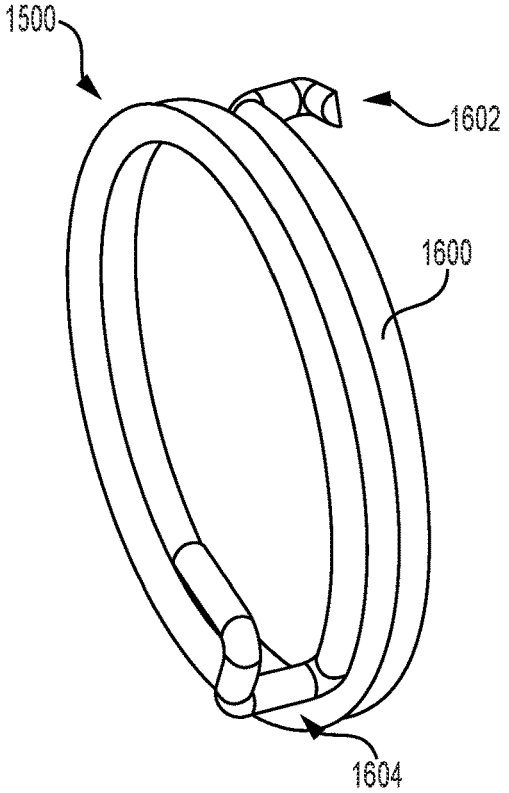

FIG. 16A

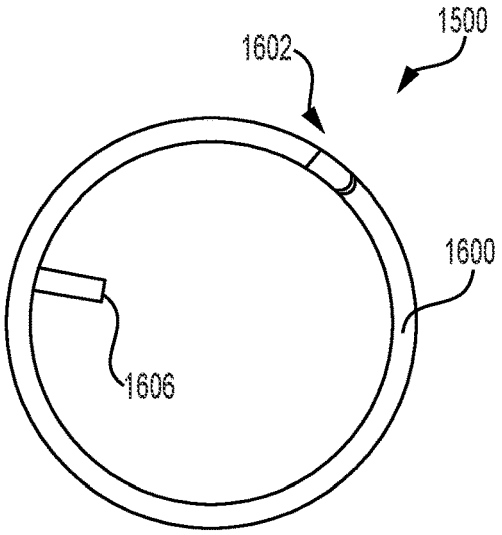

FIG. 16B

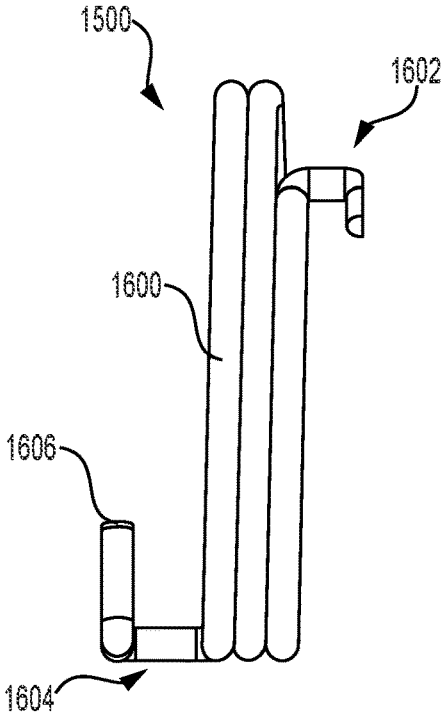

FIG. 16C

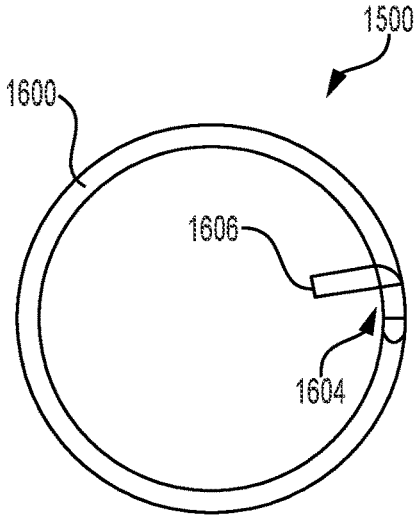

FIG. 16D

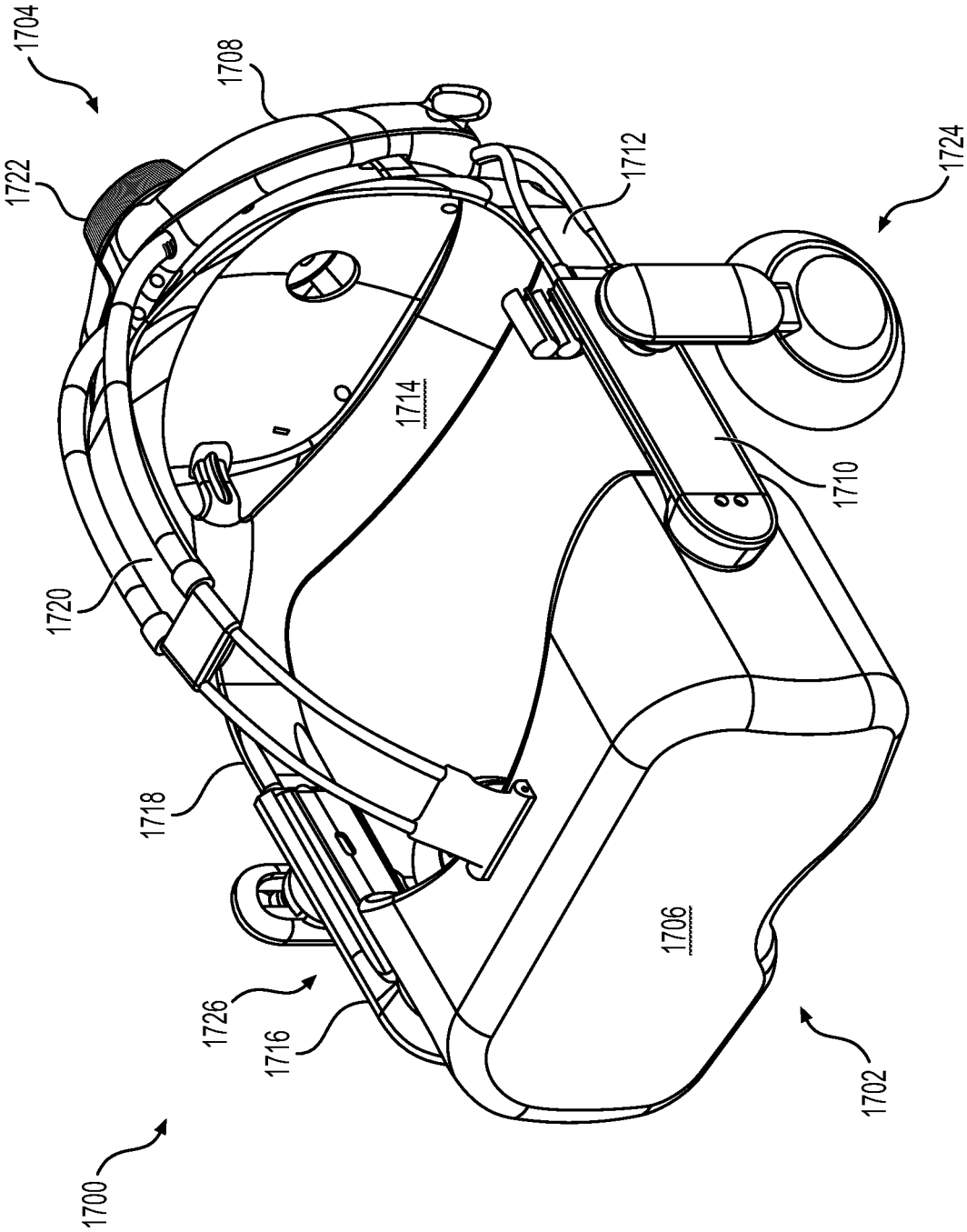
1704
1722
1708
1720
1718
1726
1716
1700
1714
1712
1710
1706
1702
1724

FIG. 17

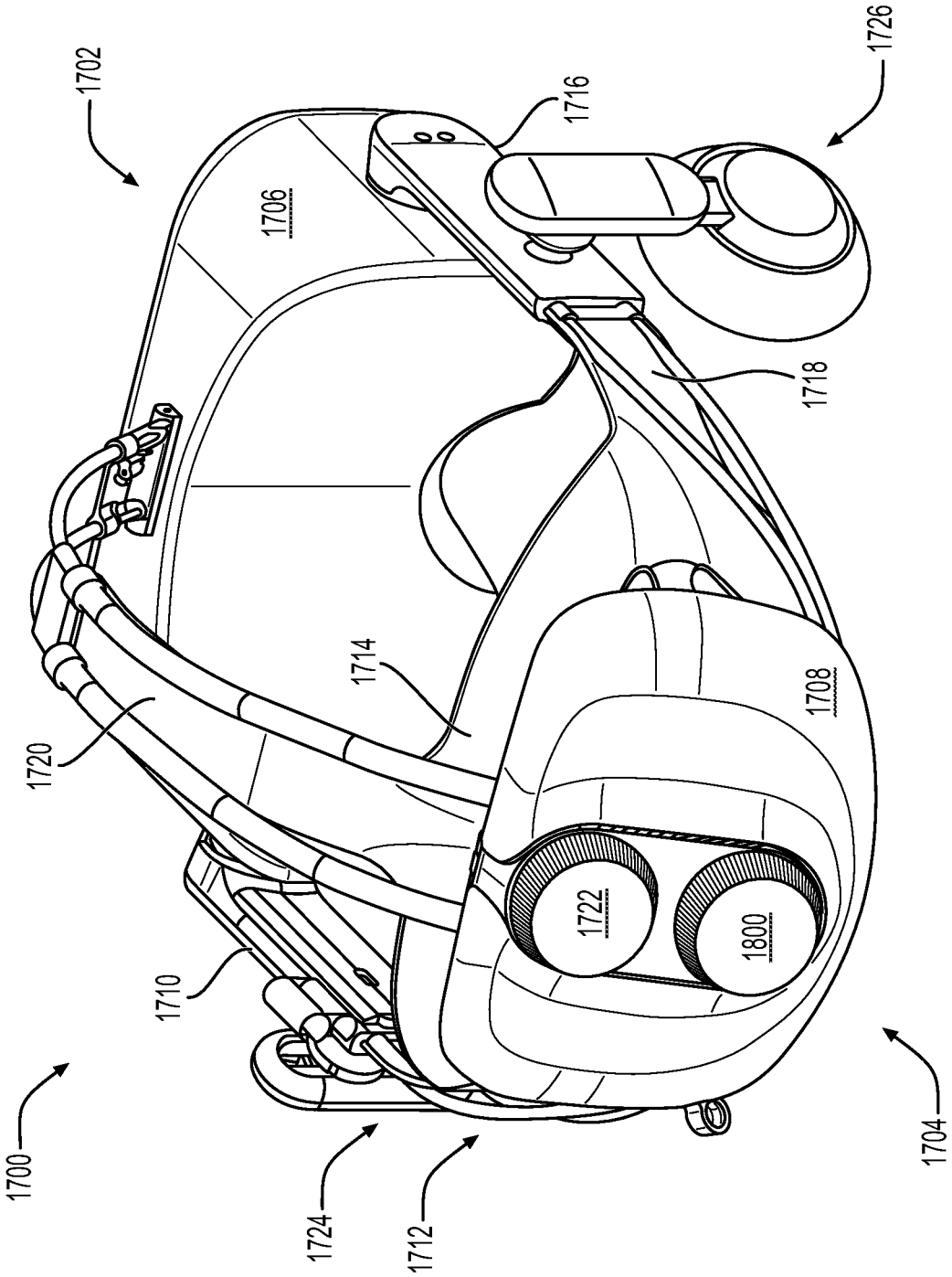
1700
1702
1704
1706
1708
1710
1712
1714
1716
1718
1720
1722
1724
1726
1800

FIG. 18

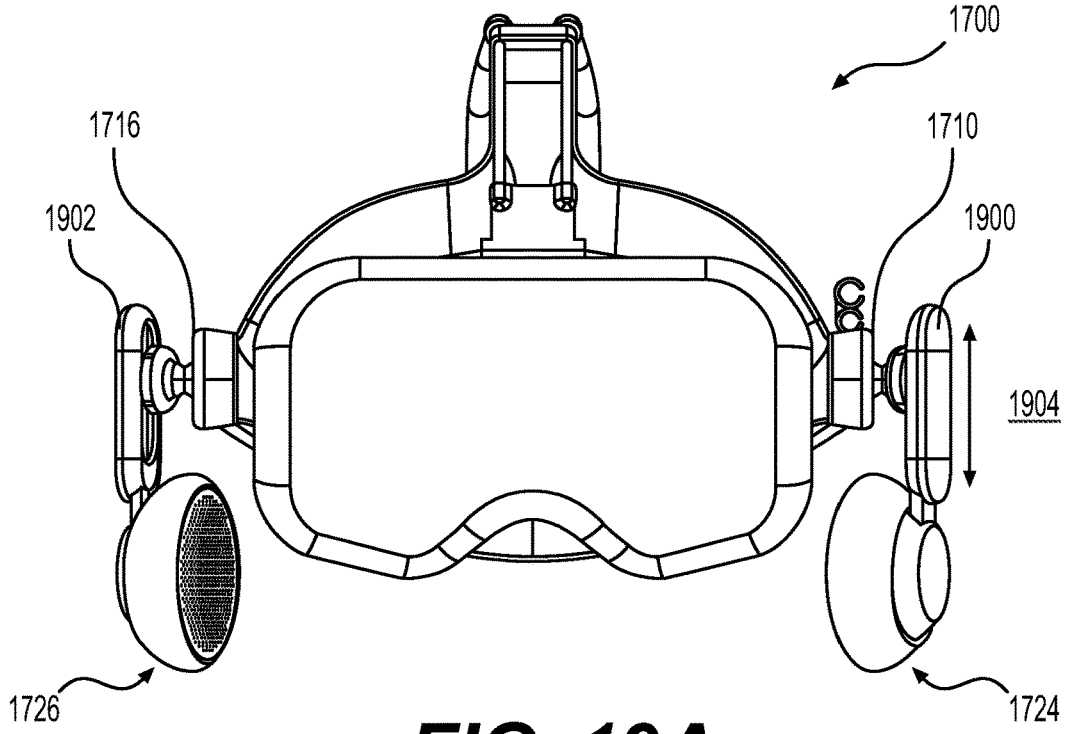

FIG. 19A

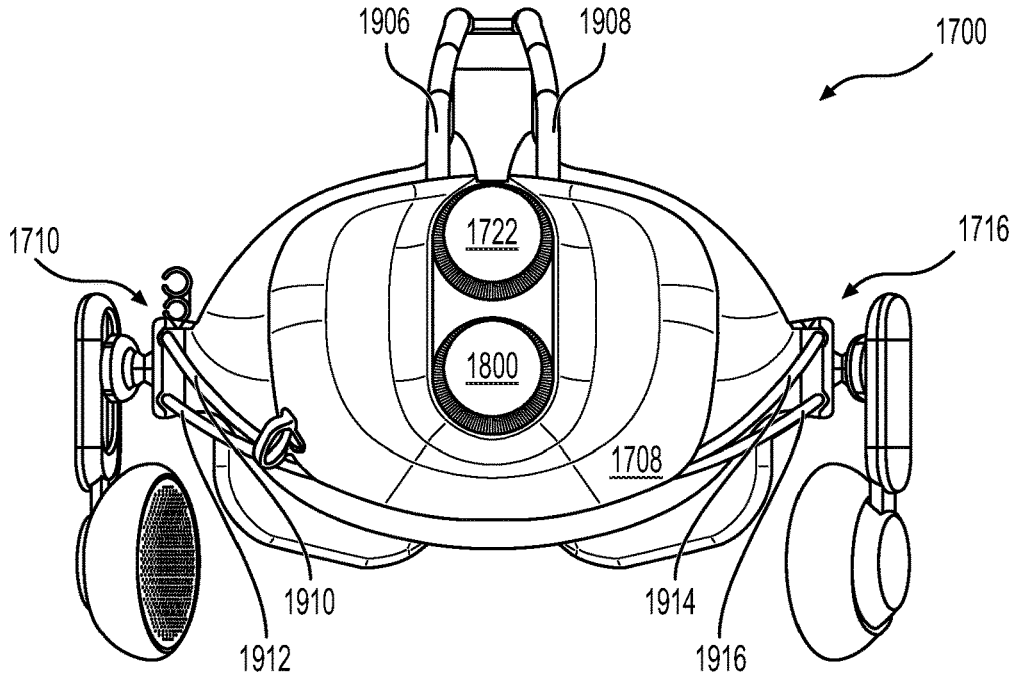

FIG. 19B

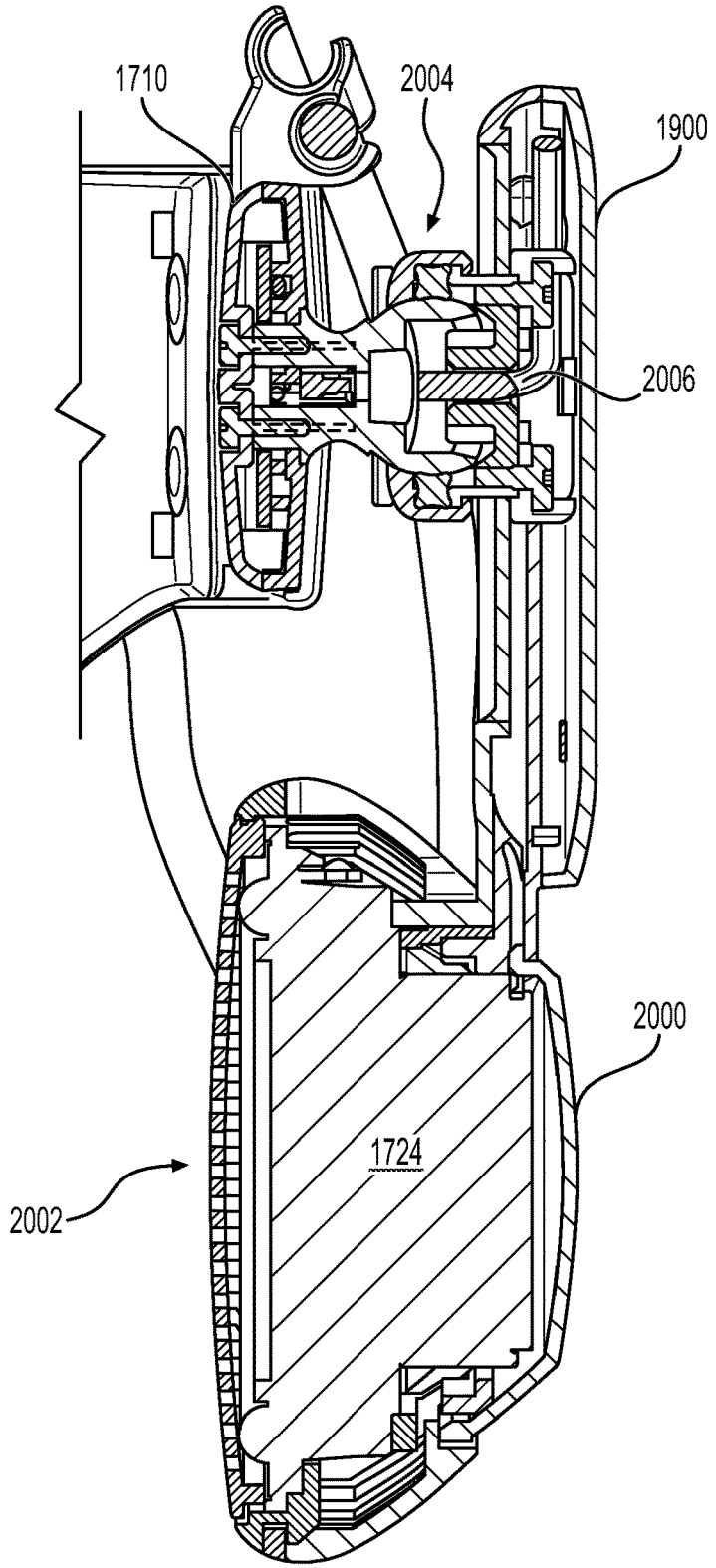

FIG. 20A

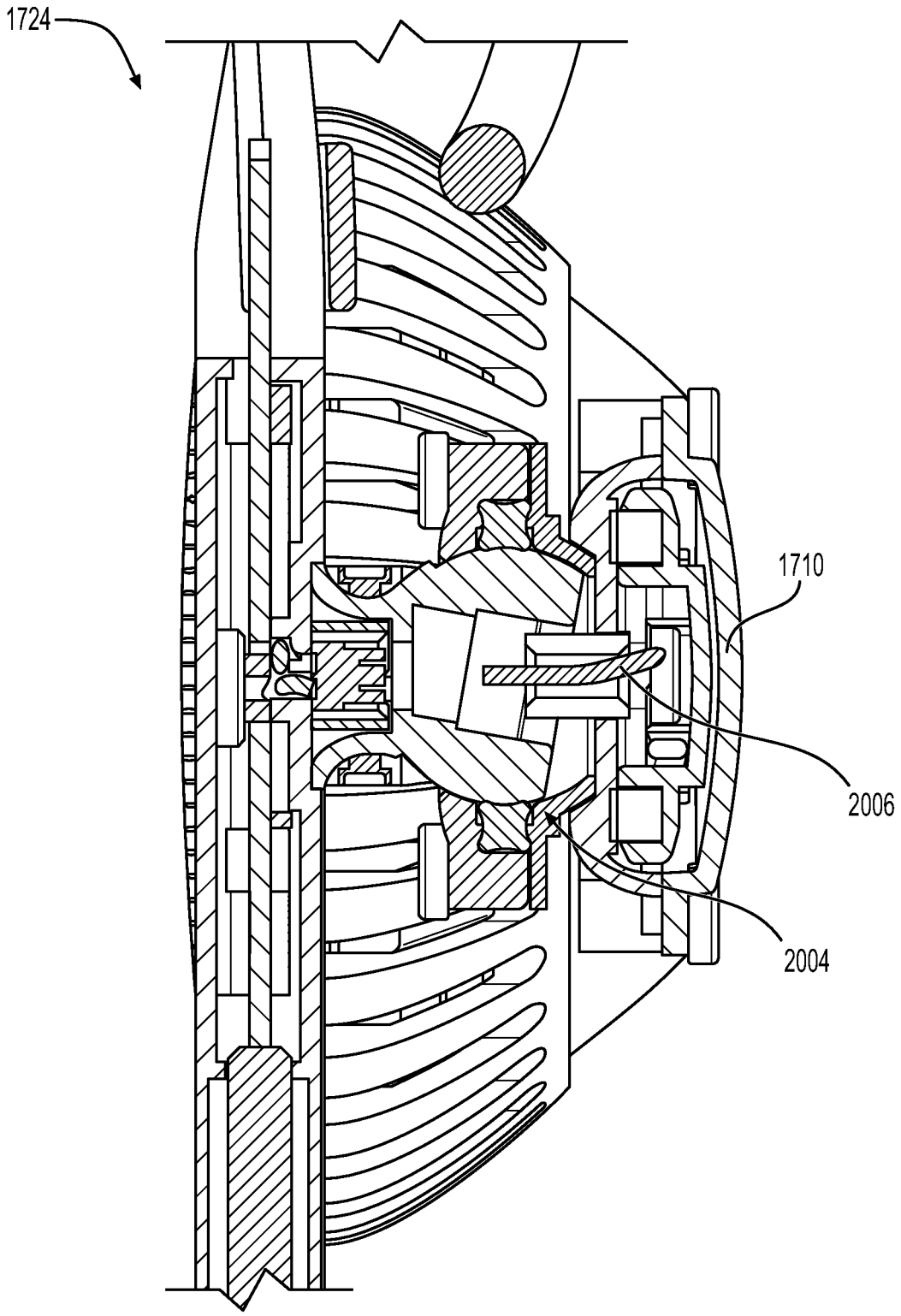

FIG. 20B

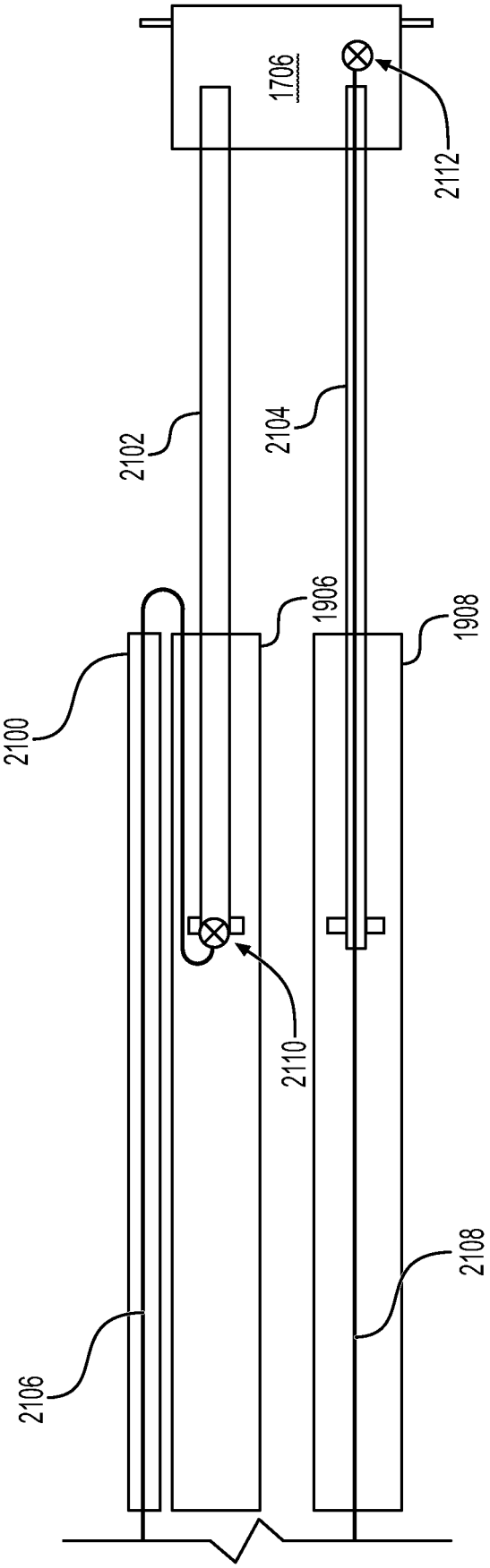

FIG. 21

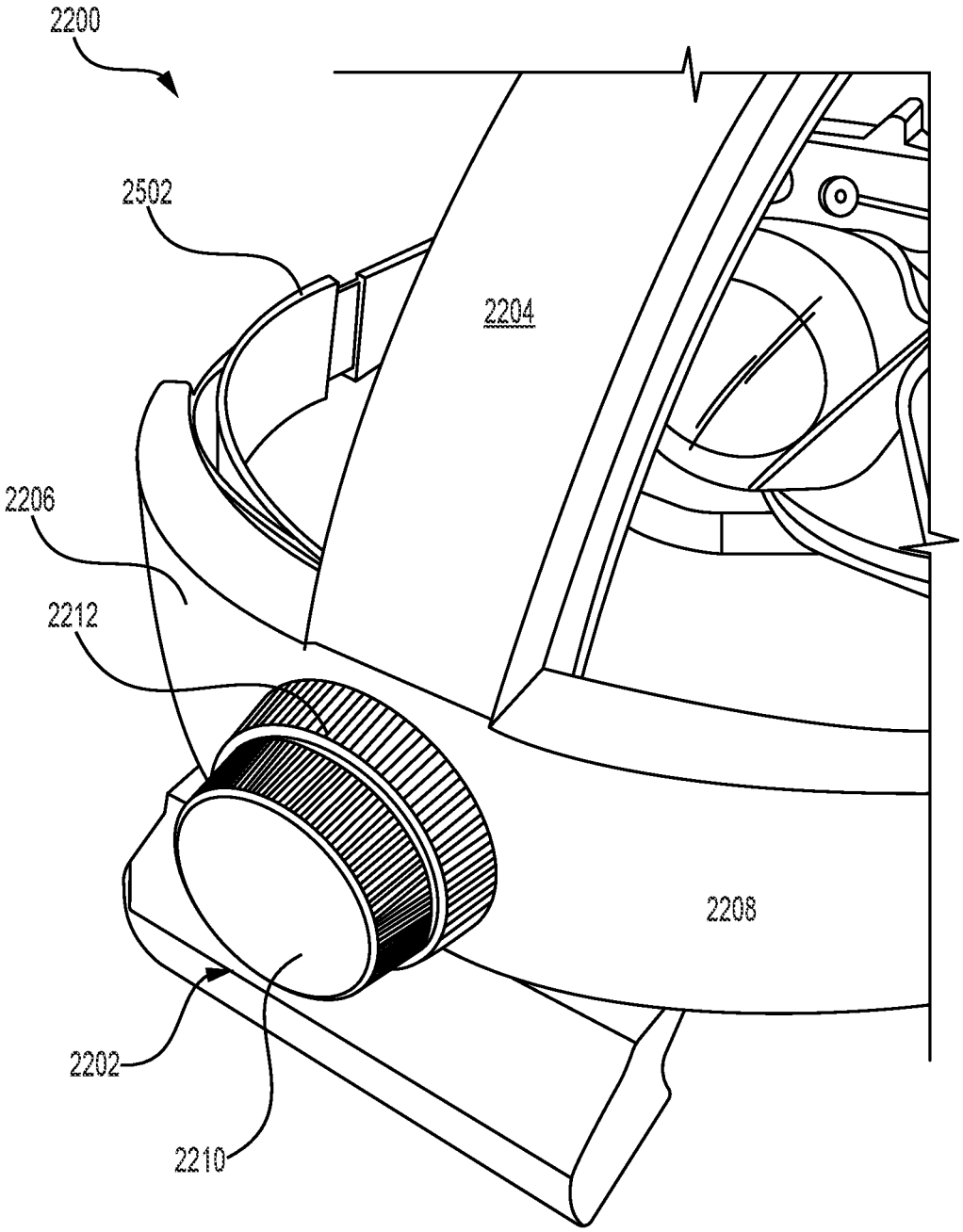

FIG. 22

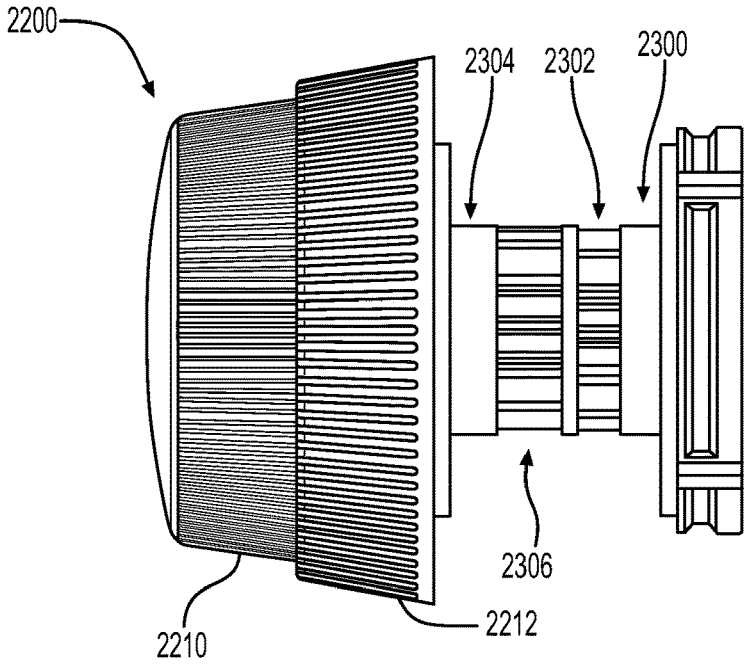

FIG. 23A

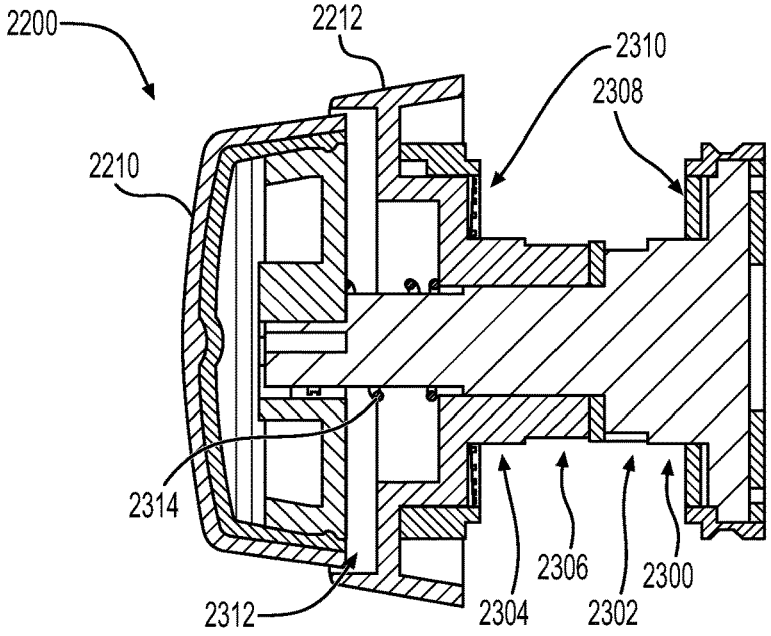

FIG. 23B

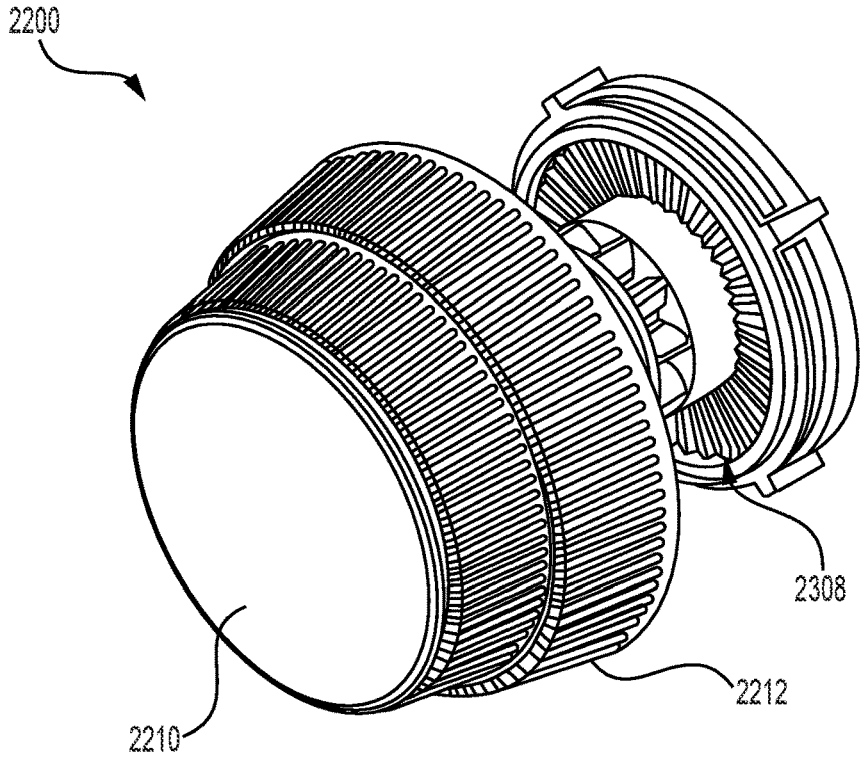

FIG. 24A

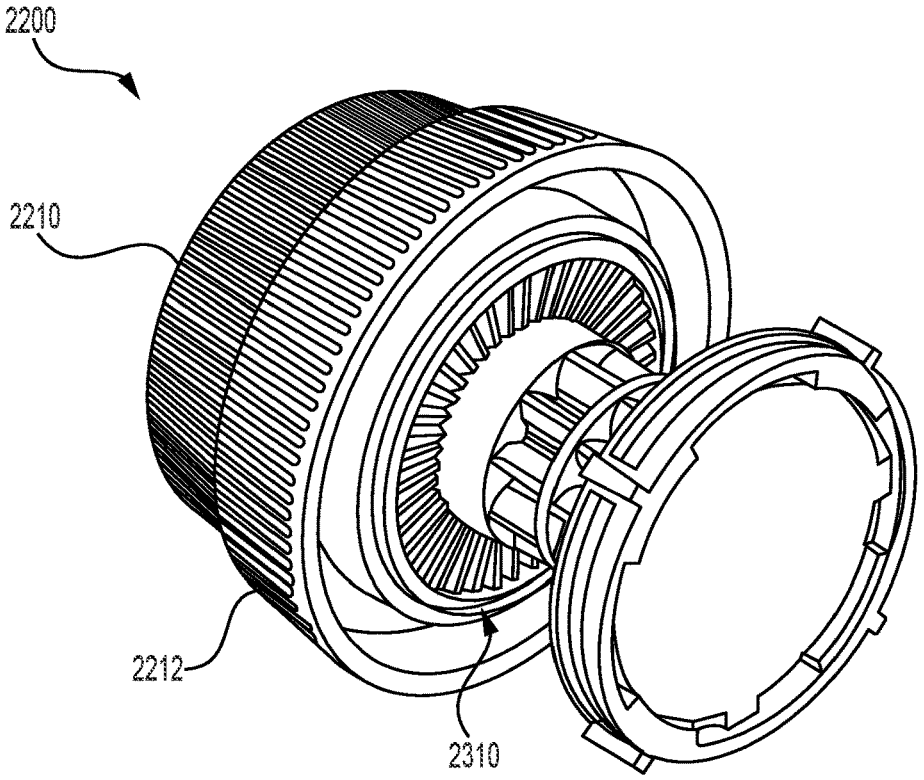

FIG. 24B

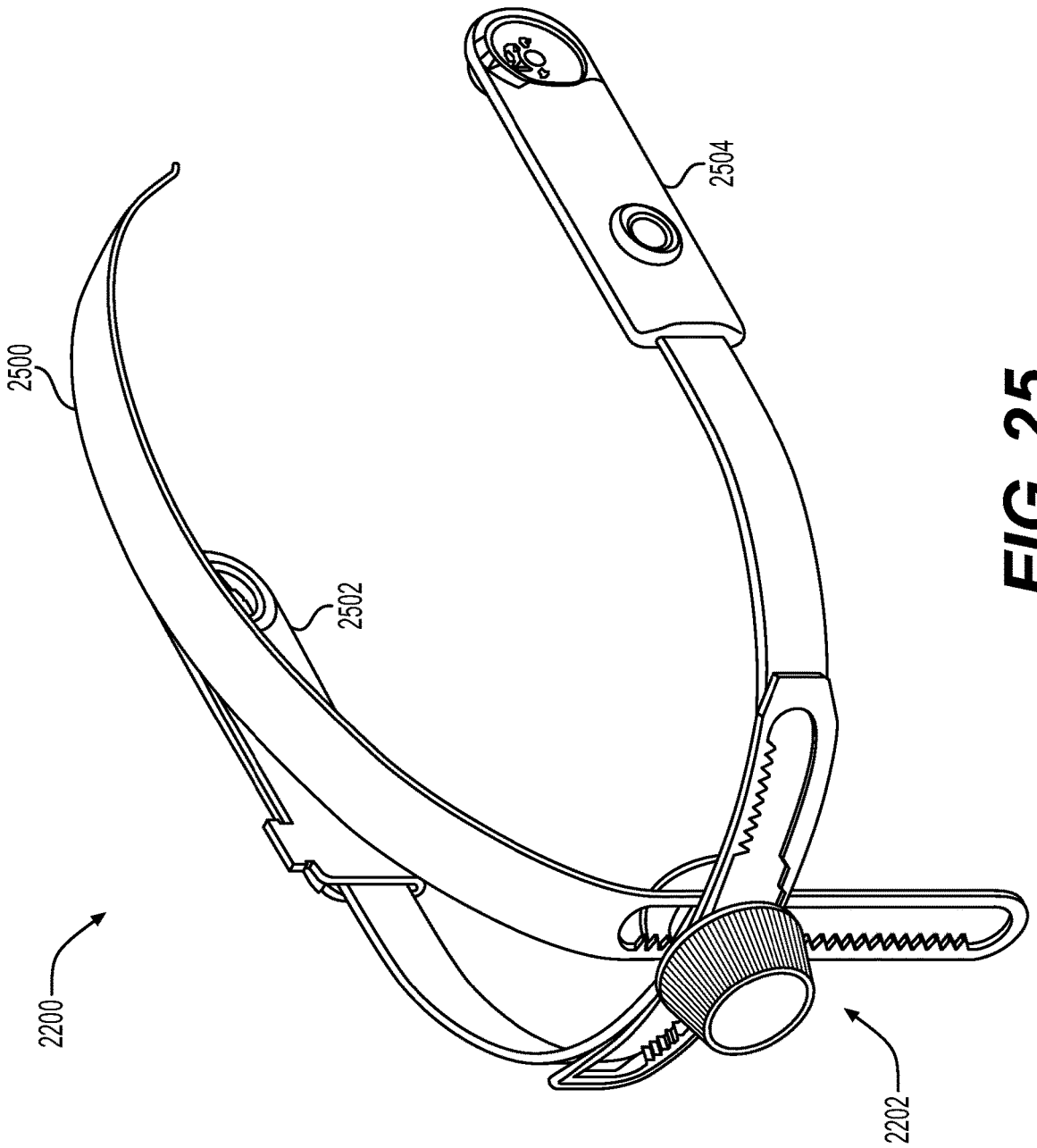

FIG. 25

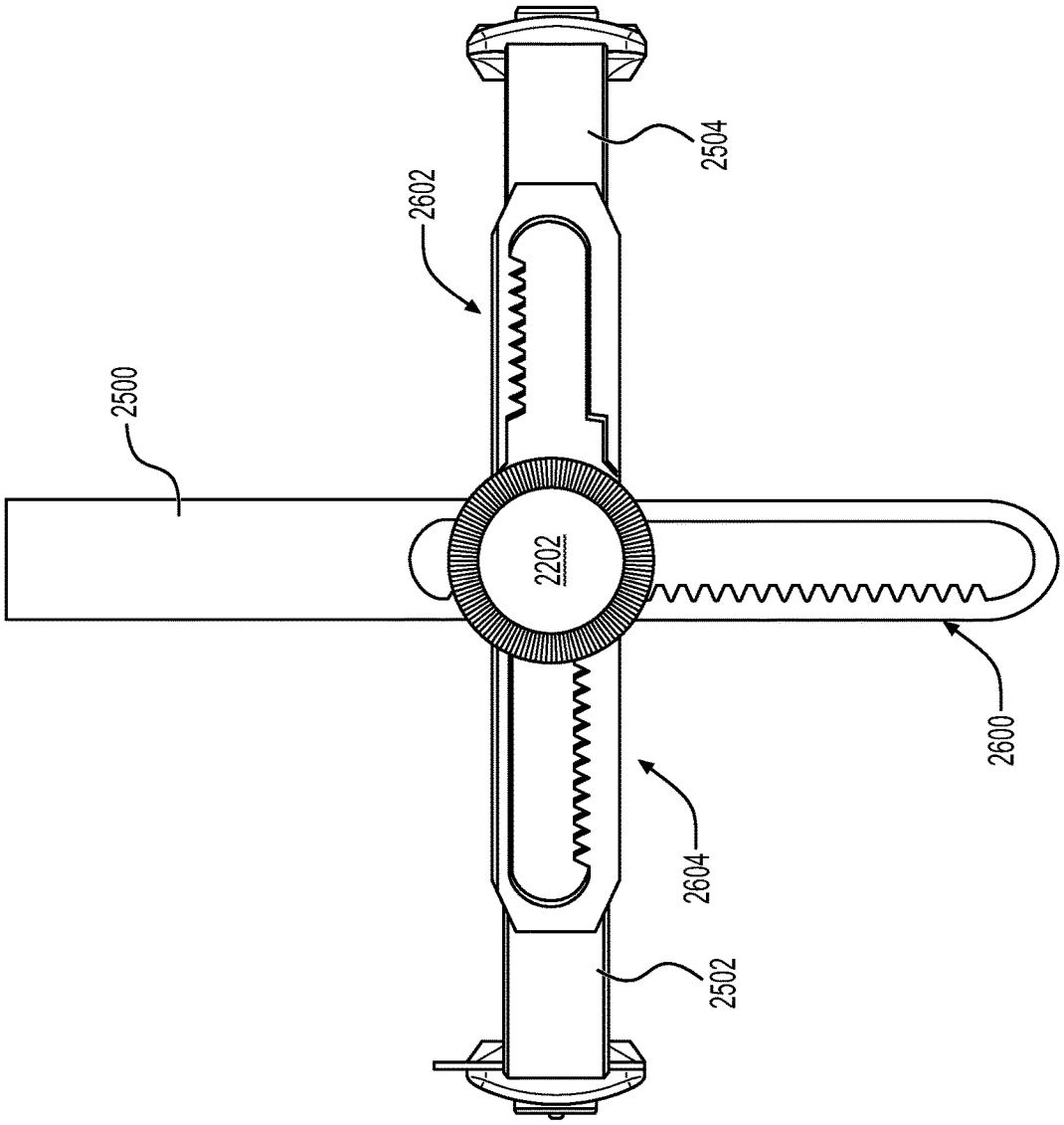

FIG. 26

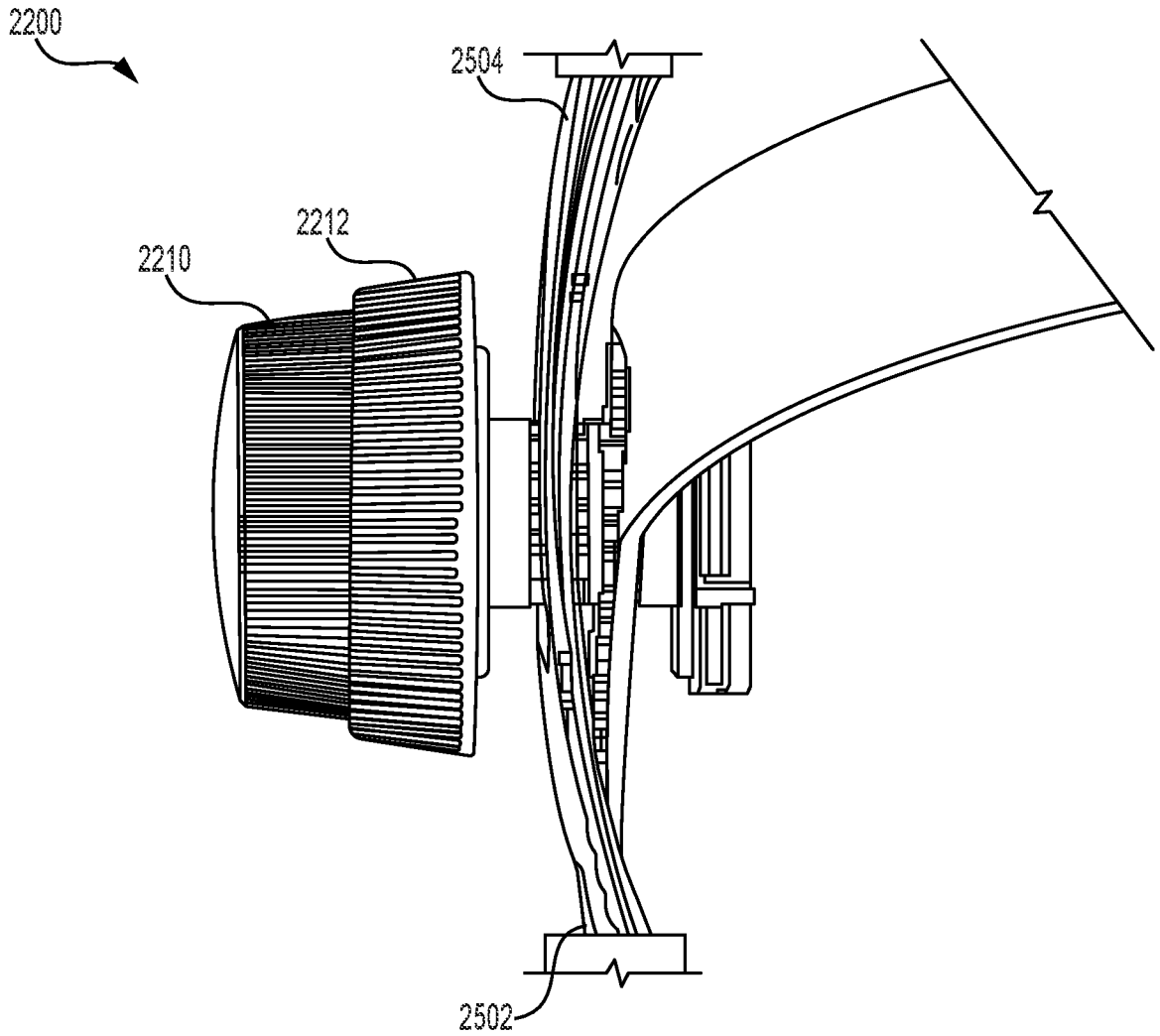

FIG. 27

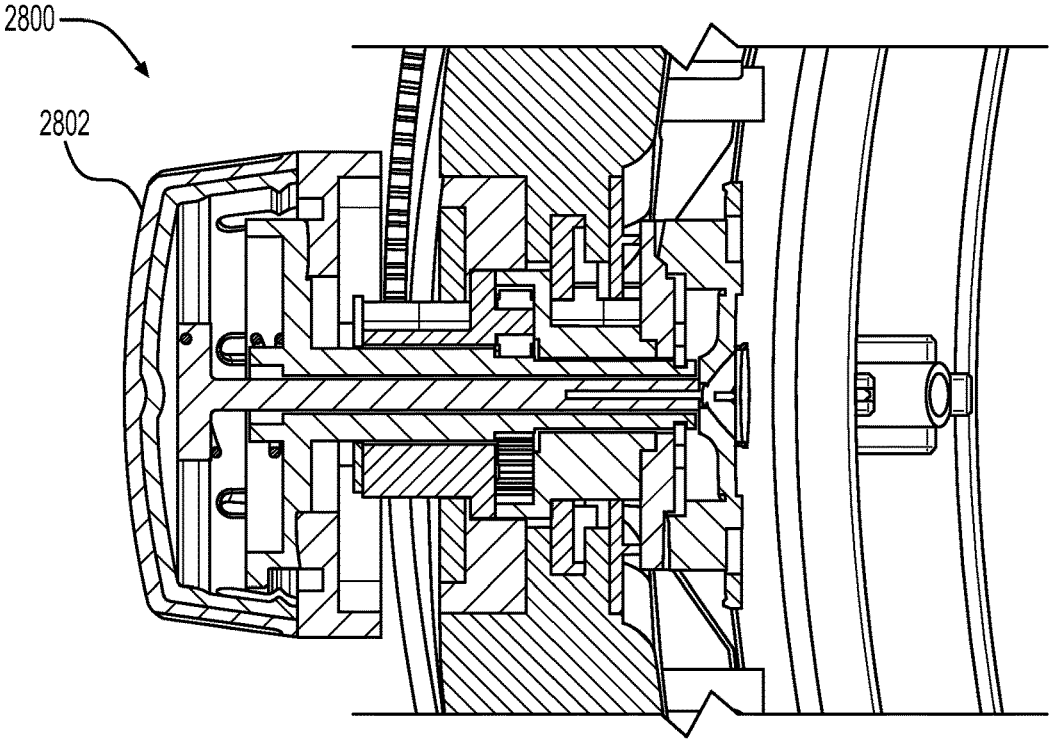

FIG. 28A

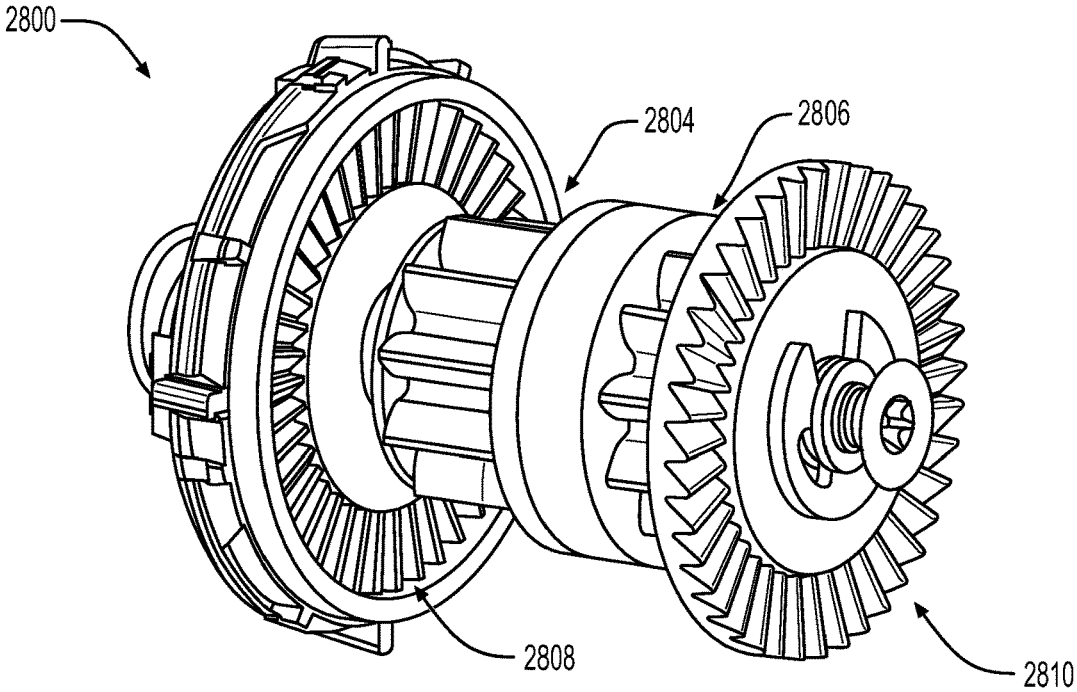

FIG. 28B

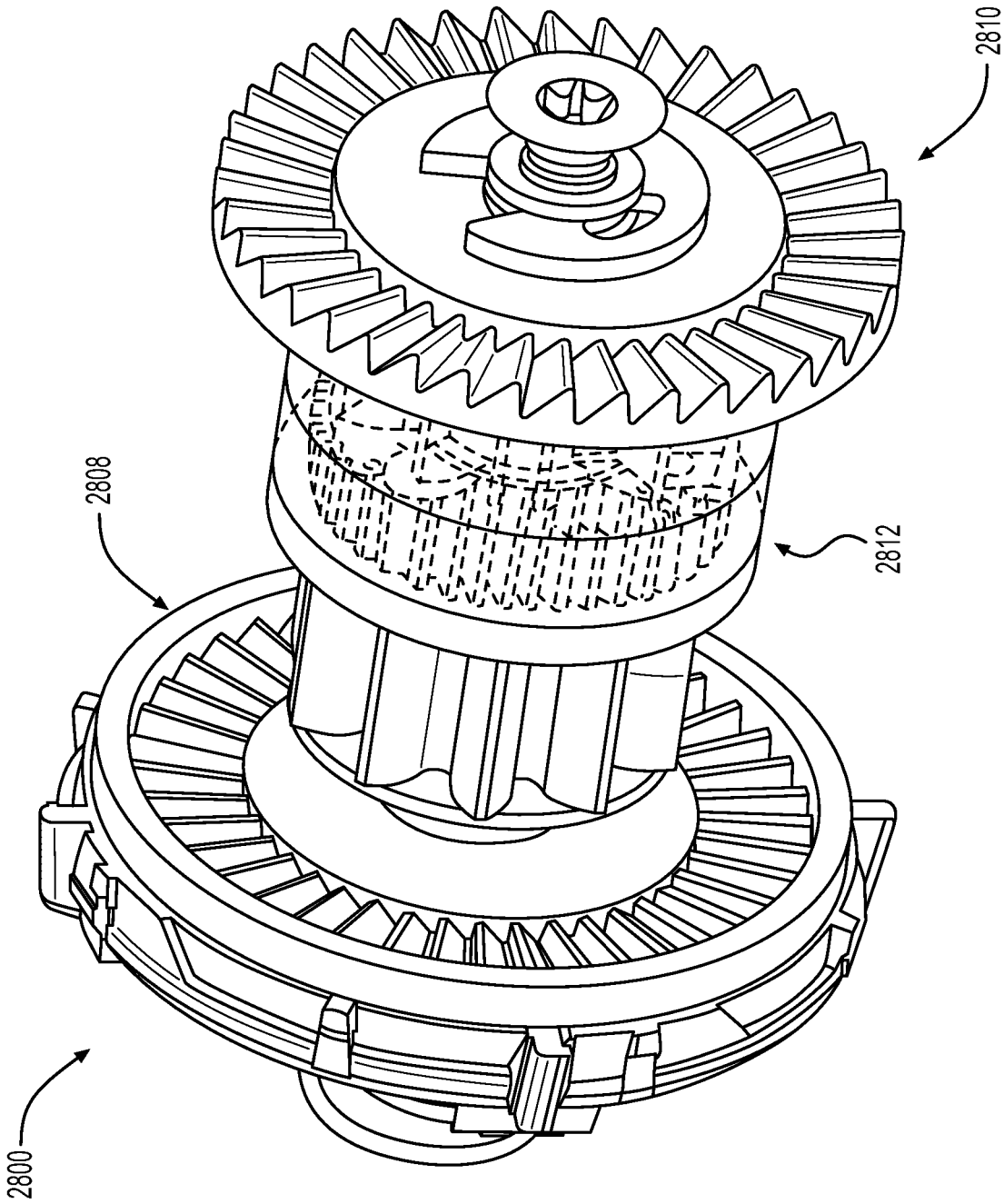

FIG. 28C

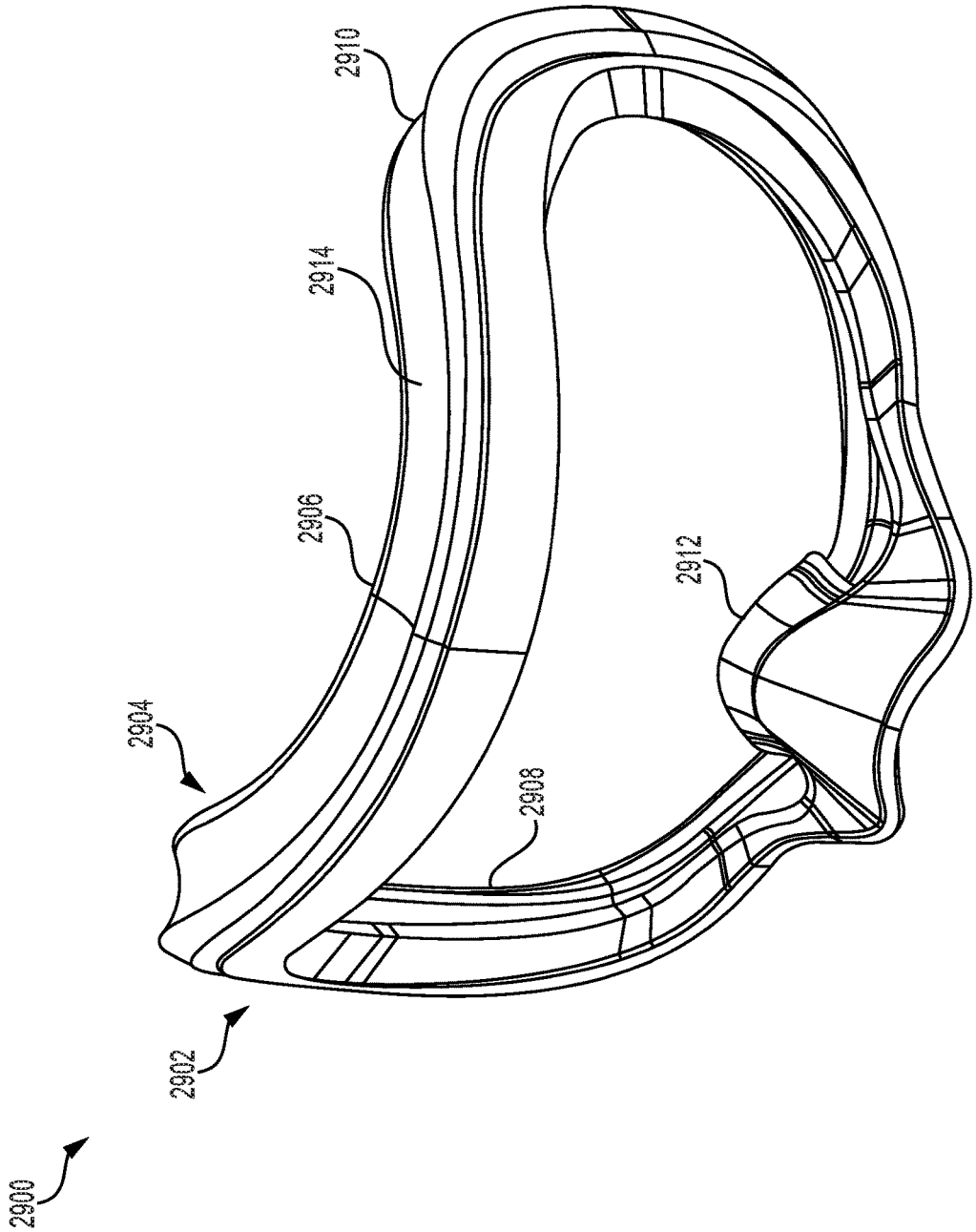

FIG. 29A

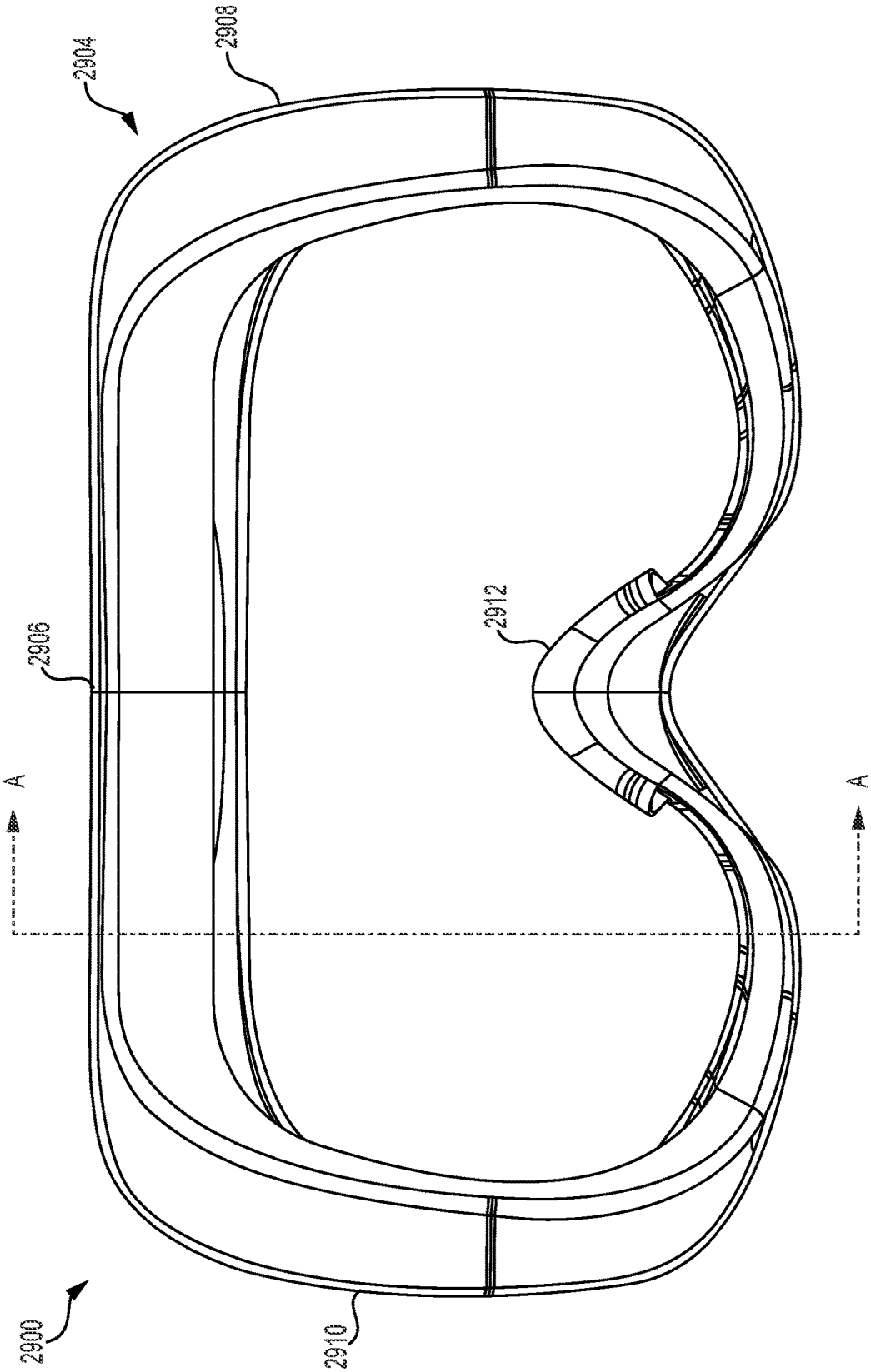

FIG. 29B

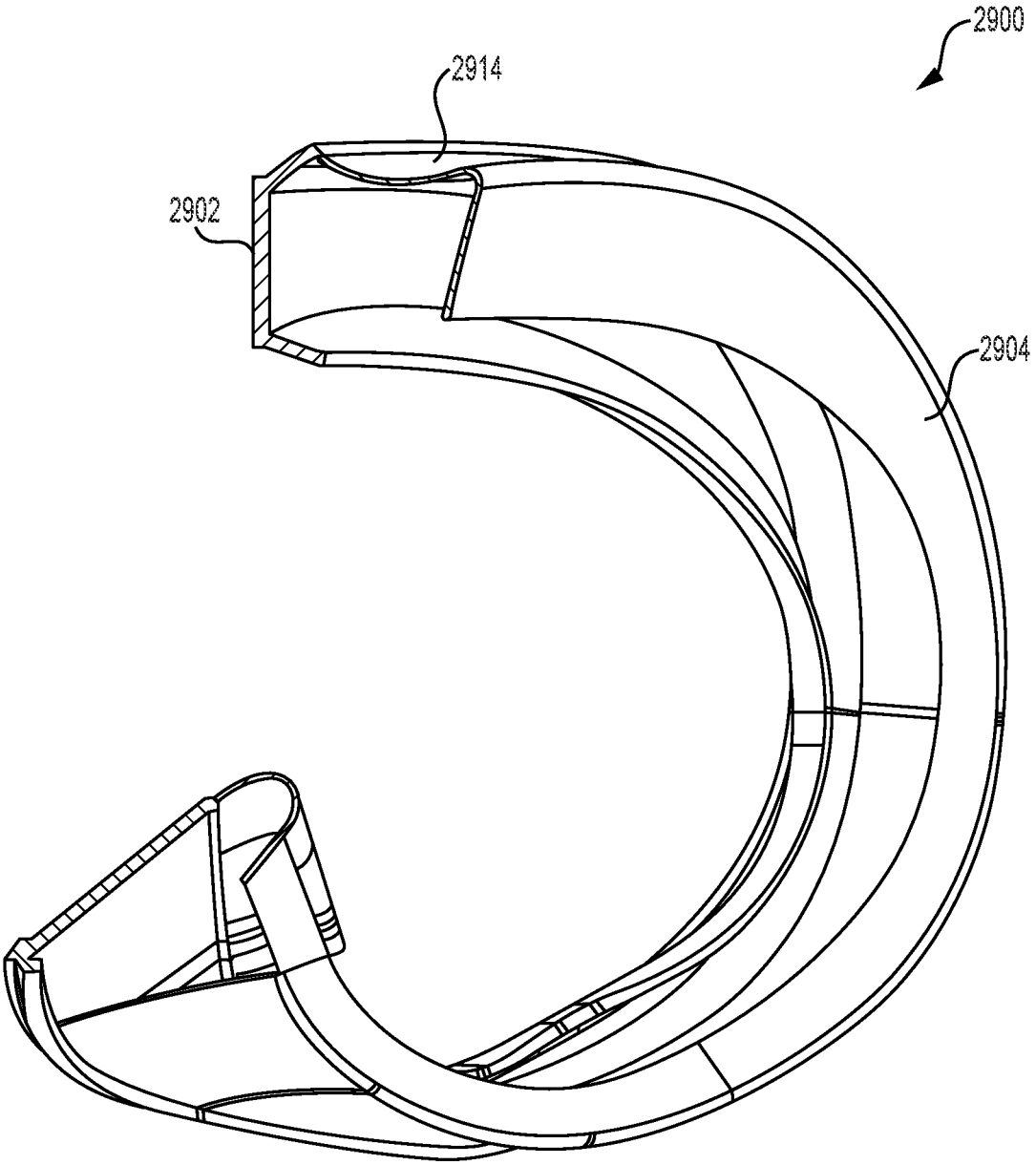

FIG. 29C

HEAD-MOUNTED DISPLAY

CROSS REFERENCE TO RELATED APPLICATION

[0001] This application claims priority to commonly assigned, co-pending U.S. Provisional Patent Application Ser. No. 63/125,503, filed Dec. 15, 2020. Application Ser. No. 63/125,503 is fully incorporated herein by reference.

BACKGROUND

[0002] Head-mounted displays are used in various fields, including engineering, medical, military, and video gaming. In some instances, head-mounted displays present information or images to a user as part of a virtual reality or augmented reality environment. As an example, while playing a video game, a user may wear a head-mounted display to immerse themselves within a virtual environment.

[0003] Conventional head-mounted displays provide little or no adjustment to accommodate differing head sizes and/or to adjust a tightness of the head-mounted display. As a result, some users may find it difficult to enjoyably wear head-mounted displays. For instance, if too snug, the head-mounted display may be uncomfortable to wear. Alternatively, if too loose, the head-mounted display may not properly secure to the user. Moreover, users have different facial structures and shapes.

BRIEF DESCRIPTION OF THE DRAWINGS

[0004] The detailed description is described with reference to the accompanying figures. In the figures, the left-most digit(s) of a reference number identifies the figure in which the reference number first appears. The same, or like, reference numbers in different figures indicate similar or identical items. The systems depicted in the accompanying figures are not to scale and components within the figures may be depicted not to scale with each other.

[0005] FIG. **1** illustrates a front isometric view of an example head-mounted display, according to an embodiment of the present disclosure.

[0006] FIG. **2** illustrates a rear isometric view of the head-mounted display of FIG. **1**, according to an embodiment of the present disclosure.

[0007] FIG. **3** illustrates a top view of the head-mounted display of FIG. **1**, according to an embodiment of the present disclosure.

[0008] FIG. **4** illustrates a rear view of the head-mounted display of FIG. **1**, according to an embodiment of the present disclosure.

[0009] FIG. **5**A illustrates a first side view of the head-mounted display of FIG. **1**, according to an embodiment of the present disclosure.

[0010] FIG. **5**B illustrates a second side view of the head-mounted display of FIG. **1**, according to an embodiment of the present disclosure.

[0011] FIG. **6**A illustrates an example member of the head-mounted display of FIG. **1** in a retracted state, according to an embodiment of the present disclosure.

[0012] FIG. **6**B illustrates the member of FIG. **6**A in an extended state, accordingly to an embodiment of the present disclosure.

[0013] FIG. **7**A illustrates a first isometric view of an example actuator of the head-mounted display of FIG. **1**, according to an embodiment of the present disclosure.

[0014] FIG. **7**B illustrates a second isometric view of the actuator of FIG. **7**A, according to an embodiment of the present disclosure.

[0015] FIG. **8** illustrates a side view of an example actuator disposed within a housing of the head-mounted display of FIG. **1**, according to an embodiment of the present disclosure.

[0016] FIG. **9** illustrtes an isometric view showing an example rear harness of the head-mounted display of FIG. **1**, according to an embodiment of the present disclosure.

[0017] FIG. **10**A illustrates a first actuator of the head-mounted display of FIG. **1** engaging one or more cables for adjusting a vertical position of the head-mounted display on a user, according to an embodiment of the present disclosure.

[0018] FIG. **10**B illustrates a second actuator of the head-mounted display of FIG. **1** engaging one or more cables for adjusting a tightness of the head-mounted display on a user, according to an embodiment of the present disclosure.

[0019] FIG. **10**C illustrates the first actuator of the head-mounted display of FIG. **1** engaging one or more cables for adjusting a vertical position of the head-mounted display on a user, according to an embodiment of the present disclosure.

[0020] FIG. **11** illustrates one or more cables coupled to an example top member of the head-mounted display of FIG. **1** for adjusting a vertical position of the head-mounted display on a user, according to an embodiment of the present disclosure.

[0021] FIG. **12** illustrates an additional view showing the one or more cables of FIG. **11** for adjusting the vertical position, according to an embodiment of the present disclosure.

[0022] FIG. **13** illustrates one or more cables coupled to an example lateral member of the head-mounted display of FIG. **1** for adjusting a tightness of the head-mounted display on a user, according to an embodiment of the present disclosure.

[0023] FIG. **14** illustrates an additional view showing the one or more cables of FIG. **13** for adjusting the tightness of the head-mounted display, according to an embodiment of the present disclosure.

[0024] FIG. **15**A illustrates an example torsional spring within a lateral member of the head-mounted display of FIG. **1**, disposed at a first position, according to an embodiment of the present disclosure.

[0025] FIG. **15**B illustrates the torsional spring of FIG. **15**A, disposed at a second position, according to an embodiment of the present disclosure.

[0026] FIGS. **16**A-**16**D illustrate various views of the torsional spring of FIG. **15**A, according to an embodiment of the present disclosure.

[0027] FIG. **17** illustrates a front isometric view of an example head-mounted display, according to an embodiment of the present disclosure.

[0028] FIG. **18** illustrates a rear isometric view of the head-mounted display of FIG. **17**, according to an embodiment of the present disclosure.

[0029] FIG. **19**A illustrates a front view of the head-mounted display of FIG. **17**, according to an embodiment of the present disclosure.

[0030] FIG. **19**B illustrates a rear view of the head-mounted display of FIG. **17**, according to an embodiment of the present disclosure.

[0031] FIG. **20**A illustrates a first cross sectional view of an example loudspeaker of the head-mounted display of FIG. **17**, according to an embodiment of the present disclosure.

[0032] FIG. **20**B illustrates a second cross sectional view of a loudspeaker of the head-mounted display of FIG. **17**, according to an embodiment of the present disclosure.

[0033] FIG. **21** illustrates one or more cables for adjusting a vertical position of the head-mounted display of FIG. **17** on a user, according to an embodiment of the present disclosure.

[0034] FIG. **22** illustrates a rear isometric view of an example head-mounted display, according to an embodiment of the present disclosure.

[0035] FIG. **23**A illustrates a side view of an example actuator of the head-mounted display of FIG. **22**, according to an embodiment of the present disclosure.

[0036] FIG. **23**B illustrates a cross-sectional view of the actuator of FIG. **23**A, according to an embodiment of the present disclosure.

[0037] FIG. **24**A illustrates a first isometric view of the actuator of FIG. **23**A, according to an embodiment of the present disclosure.

[0038] FIG. **24**B illustrates a second isometric view of the actuator of FIG. **23**A, according to an embodiment of the present disclosure.

[0039] FIG. **25** illustrates an isometric view of one or more members of the head-mounted display of FIG. **22**, according to an embodiment of the present disclosure.

[0040] FIG. **26** illustrates a rear view of the one or more members of FIG. **25** engaged with the actuator of FIG. **23**A, according to an embodiment of the present disclosure.

[0041] FIG. **27** illustrates an isometric view of the one or more members of FIG. **25** engaged with the actuator of FIG. **23**A, according to an embodiment of the present disclosure.

[0042] FIG. **28**A illustrates a cross-sectional view of an example planetary gear drive of an example head-mounted display, according to an embodiment of the present disclosure.

[0043] FIG. **28**B illustrates a isometric view of the planetary gear drive of FIG. **28**A, according to an embodiment of the present disclosure.

[0044] FIG. **28**C illustrates a transparent view of the planetary gear drive of FIG. **28**A, according to an embodiment of the present disclosure.

[0045] FIG. **29**A illustrates a front isometric view of an example face gasket, according to an embodiment of the present disclosure.

[0046] FIG. **29**B illustrates a plan view of the example face gasket of FIG. **29**A, according to an embodiment of the present disclosure.

[0047] FIG. **29**C illustrates a cross-sectional view of the example face gasket of FIG. **29**A, according to an embodiment of the present disclosure.

DETAILED DESCRIPTION

[0048] Introduced above, head-mounted displays (HMDs) have a wide range of applications and in some instances, may need to accommodate for varying head sizes among different users. Conventional HMDs, however, offer little to no adjustment for adapting to different users and/or incrementally tightening. For instance, conventional HMDs may use elastic or hook and loop straps to secure the HMD. Such mechanisms, however, are fairly crude, rudimentary, and some users may find it difficult to adjust HMDs on-the-fly and/or in small increments. As such, the HMD may not securely fit and/or users may spend time readjusting the HMD. Such alterations detract from the utility of HMDs and/or negatively impact user experiences. Additionally, failing to properly secure the HMD may impact a quality of images presented in virtual reality (VR) and/or augmented reality (AR) environments. Accordingly, HMDs may be uncomfortable and/or inconvenient to wear for extended periods of time.

[0049] This application describes, in part, a HMD that snuggly, comfortably, and securely fits around or mounts to a head of a user. In some instances, the HMD according to the instant application may take many forms, including helmets, visors, goggles, masks, glasses, and other head or eyewear worn on the head of the user. The HMD includes a front having a display worn on the face, adjacent to the eyes, of the user that outputs images (or other content) for viewing. In some instances, the images may be output by an application or computing device (e.g., video game console) communicatively coupled to the HMD. Additionally, in some instances, the user may operate one or more handheld-controller in conjunction with the HMD to further engage the user in VR or AR environments.

[0050] The front of the HMD includes a face gasket that abuts the face of the user. The face gasket includes complimentary shapes and/or contours for engaging the face of the user and sealing the display (or the housing) against the face of the user. The face gasket may include a compliant, soft, elastic, or flexible material (e.g., elastomer, foam, etc.) that conforms to the ergonomics of the face. Additionally, the face gasket may be wrapped or encased with a fabric material. The face gasket may compress (e.g., fold upon itself, roll, etc.) when the HMD is tightened to the user and may expand (e.g., lengthen) when the HMD loosens from the user. Such deformation may account for varying ergonomics of the face and allow the face gasket to conform and seal against the face of the user. In such instances, the face gasket may have a degree of play or travel for abutting the face of the user.

[0051] A back of the HMD may include a basket, cradle, support, frame, or harness configured to secure around a back of the head. In some instances, the harness may engage under and/or with the occipital bone of the head, thereby clutching the head and securing the HMD. In some instances, the harness, or portions of the harness, may be spring-loaded or tension-loaded to maintain constant pressure on the head. Such pressure may assist in securing the HMD to the user by ergonomically conforming the harness. The harness may also include one or more articulating joints (e.g., ball joint, pivot, etc.) for clutching against the back of the head. Moreover, the harness may include different material thicknesses and/or voids to provide the harness with varying levels of stiffness. For example, the different voids and/or material thicknesses throughout the harness may offer a spring-like feel to maintain contact against the head and/or conform to differently shaped heads. In some instances, the harness may include a portion that engages with the head above the occipital bone and/or which circumferentially and/or radially extends around at least a portion of the head.

[0052] The harness may couple to a rear housing disposed at the back of the HMD. The rear housing may accommodate various computing components of the HMD. Additionally, the rear housing may include one or more actuators for

adjusting a fit of the HMD on the user. These actuators may be actuated by the user to tighten or loosen the HMD, for example, and/or to otherwise adjust a fit of the HMD on the user. By way of example, between the front of the HMD and the back of the HMD, one or more members may engage with the head of the user. These members may traverse over a top of the head, along sides of the head, and so forth. By adjusting a length of these members, whether individually or collectively, the user may adjust the fit and feel of the HMD.

[0053] In some instances, the members may represent strands, cords, sections, straps, bands, etc. that operably couple the front of the HMD and the back of the HMD. Through actuating the actuators the members may be extended or retracted to varying extents for tightening and loosening the HMD. Additionally, the actuators may adjust a vertical fit of the HMD on the user, or the vertical position of the display relative to the eyes. Users may therefore utilize the actuators to accommodate for varying head sizes, provide incremental amounts of fastening, and/or position the HMD based on his or her preferences.

[0054] The HMD may include various mechanisms for adjusting the fit of the HMD on the user. In one instance, cabling mechanisms may include one or more cables that route through and couple to the members for tightening and/or loosening the HMD. For example, the actuators may be operatively coupled to the one or more cables and rotated for pulling the one or more cables. Rotating the actuators in a first direction may pull the front and the back of the HMD further apart, thereby loosening the HMD. Alternatively, rotating the actuators in a second direction may pull the front and the back together, thereby tightening the HMD. In such instances, a first cable may be used for loosening the HMD while a second cable may be used for tightening the HMD. That is, pulling on the first cable may loosen the HMD and pulling on the second cable may tighten the HMD. As the first cable and the second cable are pulled, the first cable and the second cable may be spooled around respective spools, reels, rods, etc.

[0055] Moreover, depending on the direction of actuation (e.g., tightening or loosening), the first cable or the second cable may be unspooled from a respective spool. The slack introduced by one of the first cable or the second cable may be taken up to may allow the HMD to be tightened or loosened. In this sense, the first cable and the second cable may operate in unison to provide slack for either tightening or loosening the HMD.

[0056] Additionally, one or more cables may be used for adjusting a vertical fit of the HMD on the user. The vertical fit may adjust a vertical position of the display relative to the eyes of the user. Similar to the cables that are used to tighten and loosen the HMD, the cables for adjusting the vertical fit of the HMD may introduce or take up slack for accommodating different vertical fits.

[0057] To illustrate, the HMD may include multiple members and/or actuators to secure the HMD to the user. One or more lateral members may extend between the front of the HMD and the back of the HMD at opposing lateral sides of the HMD. When worn by the user, a first lateral member may extend along a first side of the head (e.g., left side) and a second lateral member may extend along a second side of the head (e.g., right side). A first end of the lateral members may hingedly, rotatably, or pivotably couple to the display worn on the face of the user. A second end of the lateral members may receive a lateral arm that extends from the rear housing or the rear harness. For example, the lateral members may include a receptacle into which the lateral arm slides. The engagement between the lateral members and the lateral arms operate to couple the front and the back of the HMD. Here, the lateral members and the lateral arms may slide over or within one another in a telescopic-like fashion to adjust a tightness of the HMD.

[0058] The cables of the cabling mechanism may mount to the lateral members and/or the lateral arms for tightening and loosening the HMD. As introduced above, the cabling mechanism may include a first cable utilized for loosening the HMD and a second cable utilized for tightening the HMD. Pulling on the first cable, via actuation of an actuator in a first direction, may cause the lateral arms to extend from the lateral members. In other words, the lateral members and the lateral arms may extend away from one another to loosen the HMD. Pulling on the second cable, via actuation of the actuator in a second direction, may cause the lateral arms to retract within the lateral members. Here, the lateral members and the lateral arms may move towards one another to tighten the HMD. Moreover, in some instances, the lateral members and the lateral arms on the first side and the second side may operate in unison during a tightening and loosening of the HMD. As such, the sides of the HMD may be tightened and loosened synchronously.

[0059] The cables of the cabling mechanisms may operatively couple to the actuator, such as dials, levers, wheels, slides, buckles, arms, and/or knobs. The cables may also be wound around respective spools that are in operational relationship with the actuators. For example, the first cable may spool and unspool from a first spool/reel while the second cable may spool and unspool from a second spool/reel. When the actuator actuates in a first direction, the first cable may spool around the first spool while the second cable may unspool from the second spool. That is, during a loosening of the HMD, the actuator may be rotated in the first direction to wind the first cable upon the first spool to cause the lateral arms to extend from the lateral members and loosen the HMD. At the same time, the second cable may be unwound from the second spool to provide slack for the loosening of the HMD. To allow the first cable to be pulled and extend the lateral arms, one end of the first cable may couple to the actuator and/or the first spool, while an opposite second end may couple to the second lateral member.

[0060] Alternatively, during tightening of the HMD, the actuator may be rotated in a second direction to unspool the first cable from the first spool, while the second cable may spool around the second spool. In this instance, the second cable may be pulled to retract the lateral arms within the lateral members for tightening the HMD. To allow the second cable to be pulled and retract the lateral arms, one end of the second cable may couple to the actuator and/or the second spool, while an opposite second end may couple to the lateral arm.

[0061] The HMD may include pulleys coupled to the lateral members and/or the lateral arms. The pulleys may route the cables through the lateral members and the lateral arms. The pulleys may also reverse a direction of the pulling force. For example, the routing of the first cable and the second cable about the pulleys may operate to loosen and tighten the HMD, respectively, depending on the cable being pulled. In some instances, torsional springs may be used to

take up or spool any unwanted slack in the first cable and/or second cable. Reducing the amount of slack may increase a responsiveness of the HMD.

[0062] In addition to including the lateral members and lateral arms, the HMD may include a top member disposed over the crown of the head, between the front and the back of the HMD. The top member may include a similar cabling mechanism as the lateral members and arms that effectuate to adjust a vertical position of the HMD on the user. For example, the top member may include a first cable that spools around a first spool and a second cable that spools around a second spool. Pulling on the first cable may lower the vertical position of the display (e.g., the HMD is lowered vertically on the user) and pulling on the second cable may raise the vertical position of the display (e.g., the HMD is raised vertically on the user). In such instances, the first cable may spool around the first spool to lower the HMD while the second cable may unspool from the second spool to provide slack. Conversely, the second cable may spool around the second spool to raise the HMD while the first cable may unspool from the first spool to provide slack. The top member and the arm may include pulleys for routing the one or more cables and/or pulling the first cable and the second cable of the top member in corresponding directions.

[0063] The HMD may include multiple actuators for respectively tightening and loosening the HMD, as well as adjusting the vertical position of the HMD. For example, the HMD may include a first actuator for adjusting the vertical position of the HMD via the top member and the arm. Additionally, the HMD may include a second actuator for tightening and loosening the HMD to the user via the lateral members and the arms. As such, the HMD may include one actuator for adjusting the tightness of the HMD (e.g., a distance interposed between the front and the back) and another actuator for adjusting the vertical fit of the HMD. That is, the one or more lateral members may serve to tightened and/or loosen the HMD to the user while one or more top members may serve to vertically position the HMD on the user. However, in some instances, a single actuator may be used for respectively actuating the top member, the lateral members, and the arms.

[0064] In some instances, rather than including cabling mechanisms, the HMD may include straps, bands, or other members that engage with actuators. As similarly discussed above, the members may traverse alongside sides of the head and/or over the crown of the head. The members, however, may include teeth, connectors, slits, tabs, notches, and/or other slots that extend along a portion of the length of the member and which engage with the actuators. The actuators may include complimentary mechanisms that are configured to engage with the slots, for instance, at different portions along the length of the member. For instance, the actuators may include dials, levers, wheels, slides, buckles, arms, and/or knobs having gears that engage with the slots. In some instances, this engagement between the members and the actuators may resemble ratchet mechanisms, slide and lock mechanisms, friction mechanisms, etc.

[0065] For example, a first lateral member may have slots longitudinal extending along a portion of its length. Similarly, a second lateral member may have slots longitudinal extending along a portion of its length. At the back of the rear housing, for example, an actuator may have one or more gear(s) that engage with the slots of the first lateral member and the second lateral member. Actuating the actuator in a first direction may cause the first lateral member and the second lateral member to extend from the rear housing to loosen the HMD. Alternatively, actuating the actuator in a second direction may cause the first lateral member and the second lateral member to retract into the rear housing to tighten the HMD. Additionally, a top member having slots extending along a portion of its length may engage with the gear(s) to extend or retract in length. This extension or retraction, respectively, may cause the HMD to lower or raise its vertical position on the user.

[0066] The HMD may include one or more loudspeakers for outputting sound to the user. In some instances, the loudspeakers may be mounted to or integrated within the lateral members of the HMD. For example, the first lateral member may include a first loudspeaker for outputting sound to a left ear of the user and the second lateral member may include a second loudspeaker for outputting sound to the right ear of the user. The loudspeakers may include components for being repositioned and/or changing an orientation or proximity of the loudspeakers relative to the user. For example, the first loudspeaker may couple to the first lateral member via one or more ball joints (e.g., ball and socket) and the second loudspeaker may couple to the second lateral member via one or more additional ball joints. The ball joints may provide varying degrees of movement about one or more axes. Additionally, the first loudspeaker and/or the second loudspeaker may couple to or be mounted on slides that telescopically extend and retract. Whereas the ball joints provide rotational movement the slides may provide translational or longitudinal movement to extend or retract the loudspeakers.

[0067] In some instances, the HMD may include one or more wire routes or assemblies that channel wires, optical fibers, or other cables between the front and the back of the HMD. For instance, the rear housing may house wireless transceivers, a battery, microphones, input/output devices, processors, modules, and/or other components to permit operation of the HMD. In some instances, the front may include the display, antenna(s), microphones, input/output devices, processors, modules, etc. One or more cables may communicatively couple the front and back to provide power, information signals, or images to be output on the display. In some instances, wires, optical fibers, and/or cables may route through the one or more wire routes to alleviate potential issues with wires becoming tangled and/or detracting from an aesthetic appearance of the HMD. In some instances, the wire route may be integrally formed within the one or more top members and/or the one or more lateral members.

[0068] Additionally, or alternatively, in some instances, the HMD may include a flexible printed circuit (FPC) that extends from the front to the back of the HMD to communicatively couple components of the HMD. In some instances, the FPC may include a service loop, or slack, which permits the FPC to extend and retract. In some instances, the service loop may be disposed internal to the sleeve.

[0069] The present disclosure provides an overall understanding of the principles of the structure, function, manufacture, and use of the systems and methods disclosed herein. One or more examples of the present disclosure are illustrated in the accompanying drawings. Those of ordinary skill in the art will understand that the systems and methods specifically described herein and illustrated in the accom-

panying drawings are non-limiting embodiments. The features illustrated or described in connection with one embodiment may be combined with the features of other embodiments, including as between systems and methods. Such modifications and variations are intended to be included within the scope of the appended claims.

[0070] FIG. **1** illustrates a front isometric view of an example HMD **100**. As shown in FIG. **1**, the HMD **100** may include a top member **102** extending from a front **104** of the HMD **100** towards a back **106** of the HMD **100**. A first end of the top member **102** is shown coupling (e.g., via a hinge) to a display housing **108** (which may contain one or more displays) of the HMD **100**. As a result, the top member **102** may be configured to pivot in relation to the display housing **108** to conform the display housing **108** to the face of the user. In some instances, in addition to including one or more displays, the display housing **108** may include battery(ies), sensor(s), adjustment mechanism(s), button(s), interface(s), controller(s), module(s), and so forth so carrying out an operation of the HMD **100**. A second end of the top member **102** may extend into or through a sleeve **110**. As discussed herein, within the sleeve **110**, the top member **102** may engage with one or more arms and/or cabling mechanisms. These arms and cabling mechanism may effectuate to increase or decrease an exposed length of the top member **102** from the sleeve **110**. For example, the cabling mechanism of the top member **102** may engage with a first actuator **112** for adjusting a vertical position of the HMD **100** on the user. Cables of the cabling mechanism may spool or unspool with an actuation of the first actuator **112** to telescopically extend and retract the top member **102** at various lengths from the sleeve **110**.

[0071] Adjustment of the top member **102** may effectuate to adjust a vertical position of the display housing **108** on the user. For example, retracting the top member **102** (or the arms) into the sleeve **110** may decrease an exposed length of the top member **102** to raise the display housing **108** relative to the face of the user. Extending the top member **102** may increase an exposed length of the top member **102** to lower the display housing **108** relative to the face of the user. In this sense, the first actuator **112** may be used to adjust the vertical position of the display housing **108** on the user.

[0072] In some instances, the top member **102** may comprise a flexible material (e.g., rubber, plastic, etc.) that is configured to arc, bend, and/or otherwise conform to the head of the user. A foam pad covered in fabric may couple to the top member **102** and/or the sleeve **110** and may include rubber knobs that allow for easy installation and removal (e.g., for cleaning or replacement) from the top member **102**. In such instances, the rubber knobs may be pressed into holes in the sleeve **110**.

[0073] The HMD **100** also includes one or more lateral members, such as a first lateral member **114** and a second lateral member **116**. The first lateral member **114** and the second lateral member **116** may extend along opposing sides of the HMD **100**, between the front **104** and the back **106**. The first lateral member **114** and the second lateral member **116** are shown coupling to opposing sides of the display housing **108** (e.g., left and right). In some instances, the first lateral member **114** and the second lateral member **116** may pivotably couple to the display housing **108** to allow the display housing **108** to pivot and conform to the user.

[0074] One or more arms may extend from the back **106** of the HMD **100** for engaging with the first lateral member **114** and the second lateral member **116**, respectively. For example, a first lateral arm **118** may extend to engage with the first lateral member **114** and a second lateral arm **120** may extend to engage with the second lateral member **116**. As discussed herein, the first lateral arm **118** and the second lateral arm **120** may be components of a rear harness **122** of the HMD **100**.

[0075] The first lateral arm **118** may engage with the first lateral member **114** to extend or retract the first lateral member **114** towards or away from the back **106**. Similarly, the second lateral arm **120** may engage with the second lateral member **116** to extend or retract the second lateral member **116** towards or away from the back **106**. As discussed herein, the HMD **100** may include an actuator that operably engages with cabling mechanisms for extending and retracting the first lateral member **114** and the second lateral member **116**. For example, actuating the actuator in a first direction may cause the first lateral member **114** and the second lateral member **116** to extend from the first lateral arm **118** and the second lateral arm **120**, respectively. This motion may increase an exposed length of the first lateral arm **118** and the second lateral arm **120** to loosen the HMD **100**. Alternatively, actuating the actuator in a second direction may cause the first lateral member **114** and the second lateral member **116** to retract towards the first lateral arm **118** and the second lateral arm **120**, respectively. This motion may decrease an exposed length of the first lateral arm **118** and the second lateral arm **120**, thereby tightening the HMD **100**.

[0076] The HMD **100** further includes the rear harness **122** that engages with a back of the head. In some instances, the rear harness **122** may include fissions or features that permit the rear harness **122** to flex or conform to the head (e.g., above and below the occipital bone of the user). The rear harness **122** may additionally or alternatively be spring loaded (e.g., leaf spring) to apply pressure to the back of head.

[0077] FIG. **2** illustrates a rear isometric view of the HMD **100**. The back **106** of the HMD **100** is shown including a rear housing **200**. The rear housing **200** may house various components of the HMD **100**, such as battery(ies), antenna (s), processor(s), printed circuit boards (PCBs), etc. Additionally, the rear housing **200** is shown including the first actuator **112** and a second actuator **202**. As shown, and in some instances, the first actuator **112** may be disposed vertically above the second actuator **202**.

[0078] Within the rear housing **200**, the first actuator **112** may engage with a cabling mechanism of the top member **102** and the second actuator **202** may engage with cabling mechanisms of the first lateral member **114** and/or the second lateral member **116**, respectfully. Introduced above, the first actuator **112** and the top member **102** may be used to vertically adjust the HMD **100** on the user, or relative to the eyes of the user, while the second actuator **202** may be used to tighten and loosen the HMD **100**. Additionally, the rear harness **122** may include the first lateral arm **118** and the second lateral arm **120** that engage with or within the first lateral member **114** and the second lateral member **116**, respectively. In some instances, the first lateral member **114** and the second lateral member **116** may slide over the first lateral arm **118** and the second lateral arm **120**, respectively.

[0079] The HMD **100** may include various tubes for routing or channeling cables of the cabling mechanisms. For example, a first tube **204** and a second tube **206** are shown

routing from the rear housing **200** to the second lateral member **116**. The first tube **204** and the second tube **206** may channel respective cables that are used to extend and retract the second lateral member **116** from the second lateral arm **120**. Although not shown in FIG. **2**, tubes may similarly connect to the first lateral member **114** for channeling cables that are used to extend and retract the first lateral member **114** from the first lateral arm **118**.

[0080] Similarly, a third tube **208** and a fourth tube **210** are shown routing from the rear housing **200** to the sleeve **110**. The third tube **208** and the fourth tube **210** may channel respectively cables that are used to extend and retract the top member **102** from the sleeve **110**. These cables may engage with the top member **102**, the sleeve **110**, and/or a top arm **212**. In some instances, the top arm **212** may couple to or engage the sleeve **110**. Here, similar to the first lateral arm **118** and the second lateral arm **120**, the rear harness **122** may include the top arm **212** that extends into the sleeve **110**. The top arm **212** may similarly engage with the top member **102** as discussed above with regard to the first lateral member **114** and the first lateral arm **118**, for example, to extend and retract at varying lengths.

[0081] FIG. **3** illustrates a top view of the HMD **100**, showing the top member **102** extending from the front **104** towards the back **106** and into the sleeve **110**. Similarly, the first lateral member **114** and the second lateral member **116** may extend around lateral sides of the HMD **100** for engaging with the first lateral arm **118** and the second lateral arm **120**, respectively. The rear harness **122** is shown extending from the back **106** to engage the head of the user. In some instances, the rear housing **200** may couple to the rear harness **122**. Additionally, the third tube **208** and the fourth tube **210** are shown routing between the rear housing **200** and the sleeve **110** for channeling cables that adjust the vertical position of the display housing **108** on the user.

[0082] FIG. **4** illustrates a rear view of the HMD **100**. The first tube **204** and the second tube **206** are shown extending from the second lateral member **116**, from a right-hand side of the HMD **100**, and towards the back **106** into the rear housing **200**. Similarly, a fifth tube **300** and a sixth tube **302** are shown extending from the first lateral member **114**, from a left-hand side of the HMD **100**, and towards the back **106** into the rear housing. The fifth tube **300** and the sixth tube **302** may house respectively cables for extending and retracting the first lateral member **114**. The first lateral arm **118** and the second lateral arm **120** are further shown extending around sides of HMD **100** and into the first lateral member **114** and the second lateral member **116**, respectively.

[0083] Further, the third tube **208** and the fourth tube **210** are shown extending from the sleeve **110**, from a top of the HMD **100**, towards the back **106** and into the rear housing **200**. The top arm **212** is also shown extending into the sleeve **110** for engaging with the cabling mechanisms to increase or decrease an exposed length of the top member **102** from the sleeve **110**.

[0084] In some instances, the first lateral member **114** and the second lateral member **116** may extend and retract in unison via an actuation of the second actuator **202**. Additionally, the engagement between the first lateral member **114** and the first lateral arm **118**, as well as the second lateral member **116** and the second lateral arm **120**, may couple the front **104** and the back **106** of the HMD **100**.

[0085] FIGS. **5**A and **5**B illustrate a first side view and a second side view of the HMD **100**, respectively. As shown in FIG. **5**A, the fifth tube **300** and the sixth tube **302** extend from the first lateral member **114** to the rear housing **200**. Cables within the fifth tube **300** and the sixth tube **302** may engage with the second actuator **202**. In FIG. **5**B, the first tube **204** and the second tube **206** extend from the second lateral member **116** to the rear housing **200**. Cables within the first tube **204** and the second tube **206** may engage with the second actuator **202**. Depending on the direction of actuation of the second actuator **202**, the first lateral member **114** may extend from or retract over the first lateral arm **118** and the second lateral member **116** may extend from or retract over the second lateral arm **120**.

[0086] Similarly, the third tube **208** and the fourth tube **210** extend from the sleeve **110** to the rear housing **200**. Cables within the third tube **208** and the fourth tube **210** may engage with the first actuator **112**. Depending on the direction of actuation of the first actuator **112**, the top member **102** may extend from or retract from the sleeve **110** at varying lengths.

[0087] The rear harness **122** may extend from the rear housing **200** so as to cusp the rear of the head when the HMD **100** is worn. In some instances, the rear harness **122** may include a pad that rests on top of the head of the user. The rear harness **122** may also be spring-loaded or tensioned to conform to different head ergonomics.

[0088] FIGS. **6**A and **6**B illustrate side views of the HMD **100**, showing the second lateral member **116** in a fully retracted state and a fully extended state, respectively. In FIGS. **6**A and **6**B, the second lateral member **116** is shown being transparent to illustrate the engagement with the second lateral arm **120**. Although the discussion herein relates to the second lateral member **116**, it is to be understood that the first lateral member **114** and the first lateral arm **118** may operate in a similar fashion.

[0089] Beginning with FIG. **6**A, the second lateral member **116** is shown fully retracted over the second lateral arm **120**. Tightening the HMD **100** via the second actuator **202** may cause an exposed length of the second lateral arm **120** to decrease. The second lateral member **116** may slide over the second lateral arm **120**, or stated alternatively, the second lateral arm **120** may be received within the second lateral member **116**. In such instances, the second lateral member **116** and the second lateral arm **120** may be in sliding relationship. However, in some instances, the second lateral member **116** and the second lateral arm **120** may slide alongside one another, within one another, and so forth. For example, the second lateral arm **120** may be configured to slide within the second lateral member **116** via a track system, or mechanisms of the second lateral member **116** and/or the second lateral arm **120** that engage to allow for sliding motion.

[0090] To position or receive the second lateral arm **120**, the second lateral member **116** may include tabs or other channels. For example, as shown the second lateral member **116** may include a plurality of channels **600** within which the second lateral arm **120** is configured to slide. The channels **600** may represent U-shaped channels that are shaped for receiving sides, ends, or edges of the second lateral arm **120**. As shown, the second lateral member **116** may include one or more channels **600** disposed at the top and/or the bottom of the second lateral member **116**. In some instances, the channels **600** may serve to align the second lateral arm **120** within the second lateral member **116**.

[0091] In FIG. **6**B, the second lateral member **116** is shown fully extended from the second lateral arm **120**. Extending the second lateral member **116** exposes a greater length of the second lateral arm **120**. That is, loosening the HMD **100** may cause an exposed length of the second lateral arm **120** to increase. In some instances, the second lateral member **116** may be configured to extend between 0 millimeters (mm) and 65 mm relative to the second lateral arm **120**.

[0092] The first tube **204** and the second tube **206** are further shown routing cables within the second lateral member **116** and/or along the second lateral arm **120**.

[0093] FIGS. **7**A and **7**B illustrate the first actuator **112**. Although the discussion herein relates to the first actuator **112**, and describes components of the first actuator **112**, it is to be understood that the second actuator **202** may include similar components.

[0094] The first actuator **112** includes a knob **700** capable of being gripped and actuated by the user. For example, the knob **700** may include ridges or grooves for gripping and being rotated by the user. The first actuator **112** further includes reels for engaging with cables of the cabling mechanism. For example, the first actuator **112** may include an extend reel **702** and a retract reel **704**. The extend reel **702** and the retract reel **704** may represent spools for taking up cables of the cabling mechanism associated with adjusting the vertical position of the display housing **108**. In some examples, the extend reel **702** may include a spool for receiving a first cable that corresponds to an extension cable. The retract reel **704** may include a second spool for receiving a second cable that corresponds to a retraction cable. The extend reel **702** and the retract reel **704** may be coupled to the knob **700** such that during a rotation of the knob **700**, the extend reel **702** and the retract reel **704** rotate.

[0095] When the first actuator **112** actuates, depending on the direction of actuation, the cables around the extend reel **702** and the retract reel **704** may spool and unspool. For example, in instances where the first actuator **112** actuates to lower the display housing **108** (e.g., clockwise), the first cable is taken up by the extend reel **702**. Discussed herein, pulleys within the top member **102**, the sleeve **110**, and/or about the top arm **212** may create a pulling motion to lower the display housing **108**. At the same time, the retract reel **704** may introduce slack into the second cable to allow the first cable to be taken up by the extend reel **702**.

[0096] To permit this operation, the first cable and the second cable may be wound around the extend reel **702** and the retract reel **704** in opposite directions. For example, the first cable may be wound around the extend reel **702** in a first direction (e.g., clockwise) and the second cable may be wound around the retract reel **704** is a second direction. As such, during take up of the first cable, the second cable may be unwound to allow for the display housing **108** to lower. Conversely, in instances where the first actuator **112** actuates to raise the display housing **108** (e.g., counterclockwise), the second cable is taken up by the retract reel **704**. At the same time, the extend reel **702** may introduce slack into the first cable to allow the second cable to be taken up by the retract reel **704** (given the different winding directions of the first cable and the second table). As such, during take up of the second cable, the first cable may be unwound to allow for the display housing **108** to raise.

[0097] The knob **700** is further shown including a ratchet mechanism including a first ratchet arms **706**(**1**) and a second ratchet arms **706**(**2**). The first ratchet arms **706**(**1**) and the second ratchet arms **706**(**2**) may be disposed on an underneath side of the knob **700**. In some instances, each of the first ratchet arms **706**(**1**) and the second ratchet arms **706**(**2**) may include two arms radially extending outward. Additionally, the first ratchet arms **706**(**1**) and the second ratchet arms **706**(**2**) may be diametrically opposed from one another. The first ratchet arms **706**(**1**) and the second ratchet arms **706**(**2**) may include arms (e.g., teeth) that engage with teeth of the rear housing **200**. That is, once the first actuator **112** couples to the rear housing **200**, the first ratchet arms **706**(**1**) and the second ratchet arms **706**(**2**) may mate with teeth of the rear housing **200**. This engagement may provide a ratchet-like operation to allow the user to rotate the first actuator **112**. Additionally, the engagement between the first ratchet arms **706**(**1**) and the second ratchet arms **706**(**2**) with the teeth of the rear housing **200** may prevent backdrive of the first actuator **112**.

[0098] FIG. **8** illustrates an engagement between the first actuator **112** and the second actuator **202** with the rear housing **200**. As noted above in FIGS. **7**A and **7**B, the second actuator **202** may have similar components as the first actuator **112**, such as an extend reel **800** and a retract reel **802** for winding/unwinding cables. In FIG. **8**, the first actuator **112** is shown disposed away from the rear housing **200** while the second actuator **202** is shown residing within the rear housing **200**.

[0099] The rear housing **200** includes cavities, pockets, or receptacles for receiving the first actuator **112** and the second actuator **202**. For example, the first actuator **112** may reside within a first receptacle **804** and the second actuator **202** is shown residing within a second receptacle **806**. When coupled to the rear housing **200**, the extend reels and the retract reels may reside within the first receptacle **804** and the second receptacle **806**, respectively.

[0100] Proximal to openings of the first receptacle **804** and the second receptacle **806**, the rear housing **200** may include ratchet teeth **808**. The ratchet teeth **808** may be disposed in a circular manner around openings to the first receptacle **804** and the second receptacle **806**. The ratchet teeth **808** may be complimentary to engage with the first ratchet arms **706**(**1**) and the second ratchet arms **706**(**2**) of the first actuator **112**. First and second ratchet arms of the second actuator **202** may similarly engage with ratchet teeth disposed around the second receptacle **806**.

[0101] FIG. **9** illustrates a transparent view of the HMD **100**, showing the rear harness **122** engaged with the rear housing **200**. As shown the top arm **212** may pivotably couple to the rear housing **200** via a ball joint **900**. In some examples, a ball portion of the ball joint **900** may extend from, or be a component of, the top arm **212**. A socket portion of the ball joint **900** may be a component of the rear housing **200**. A coupling of the ball portion within the socket portion may form the ball joint **900**. The coupling of the top arm **212** to the rear housing **200** via the ball joint **900** may assist in conforming the rear harness **122** to the head of the user. For example, the ball joint **900** may pivot the rear harness **122** in certain directions and/or axes to firmly secure the HMD **100** to the user.

[0102] FIGS. **10**A and **10**B illustrate transparent views of cables routing around reels of the first actuator **112** and the second actuator **202**, respectively.

[0103] Beginning with FIG. **10**A, the extend reel **702** and the retract reel **704** are shown residing within the first

receptacle **804**. A first cable **1000** is shown being wound, spooled, or wrapped around the extend reel **702**. The first cable **1000** may correspond to an extension cable such that when the first cable **1000** is pulled, the display housing **108** may lower on the face of the user. In other words, the first cable **1000** may be pulled to loosen a fit of the HMD **100**. In some instances, the first cable **1000** may be wound around the extend reel **702** in a first direction, such as clockwise.

[0104] A second cable **1002** is shown being wound, spooled, or wrapped around the retract reel **704**. The second cable **1002** may correspond to an retraction cable such that when the second cable **1002** is pulled, the display housing **108** may raise on the face of the user. In other words, the second cable **1002** may be pulled to tighten a fit of the HMD **100**. In some instances, the second cable **1002** may be wound around the retract reel **704** in a second direction, such as counterclockwise.

[0105] A wrap spring **1004** is shown operably coupling the extend reel **702** and the retract reel **704**. As shown, the wrap spring **1004** may engage the extend reel **702** and the retract reel **704**, at a location in between the first cable **1000** and the second cable **1002**. In some instances, the wrap spring **1004** may be coupled to the extend reel **702** and/or the retract reel **704**. The wrap spring **1004** may lock during an actuation of the first actuator **112** to lower the display housing **108**. For example, the rotation of the knob **700** in a first direction associated with raising the display housing **108** may cause the wrap spring **1004** to tighten around the retract reel **704** and pull on the second cable **1002**. When rotated in an opposite direction, the wrap spring **1004** may not engage the retract reel **704** but may lower the display housing **108** via the first cable **1000**. Depending on the direction of rotation, springs and/or pulleys may take up slack.

[0106] The first actuator **112**, the extend reel **702**, and/or the retract reel **704** may further include tabs, protrusions, annuluses, or other features for physically separating the first cable **1000**, the second cable **1002**, and the wrap spring **1004**. These features may prevent the first cable **1000**, the second cable **1002**, and the wrap spring **1004** becoming entangled. Additionally, these features may assist in guiding the first cable **1000** and/or the second cable **1002** during spooling and unspooling. A viscous clutch **1006** may further be included to overcome a slip torque and prevent the retract reel **704** from spinning with the extend reel **702**.

[0107] Moving to FIG. **10**B, a third cable **1008** and a fourth cable **1010** are shown wrapped around the extend reel **800** of the second actuator **202**. The third cable **1008** and the fourth cable **1010** may correspond to extension cables that when pulled, cause the HMD **100** to loosen from the user. In other words, the third cable **1008** and the fourth cable **1010** may be pulled to loosen a fit of the HMD **100**. In some instances, the third cable **1008** and the fourth cable **1010** may be wound around the extend reel **800** in a first direction, such as clockwise.

[0108] Being as the second actuator **202** may loosen sides of the HMD **100** in unison, or simultaneously, the extend reel **800** may operably couple to a cable for loosening the first lateral member **114** (e.g., the third cable **1008**) and a cable for loosening the second lateral member **116** (e.g., the fourth cable **1010**). As shown, the third cable **1008** and the fourth cable **1010** may be separated by a divider for respectively routing to the first lateral member **114** and the second lateral member **116**.

[0109] A fifth cable **1014** and a sixth cable **1016** are shown wrapped around the retract reel **802** of the second actuator **202**. The fifth cable **1014** and the sixth cable **1016** may correspond to retraction cables that when pulled, cause the HMD **100** to tighten from the user. In other words, the fifth cable **1014** and the sixth cable **1016** may be pulled to tighten a fit of the HMD **100**. In some instances, the fifth cable **1014** and the sixth cable **1016** may be wound around the retract reel **802** in a second direction, such as counterclockwise.

[0110] Being as the second actuator **202** may tighten sides of the HMD **100** in unison, or simultaneously, the retract reel **802** may operably couple to a cable for tightening the first lateral member **114** (e.g., the fifth cable **1014**) and a cable for tightening the second lateral member **116** (e.g., the sixth cable **1016**). As shown, the fifth cable **1014** and the sixth cable **1016** may be separated by a divider for respectively routing to the first lateral member **114** and the second lateral member **116**.

[0111] A wrap spring **1020** is shown operably coupling the extend reel **800** and the retract reel **802**. As shown, the wrap spring **1020** may engage the extend reel **800** and the retract reel **802**, at a location in between the third cable **1008**/fourth cable **1010** and the fifth cable **1014**/sixth cable **1016**. In some instances, the wrap spring **1020** may be coupled to the extend reel **800** and/or the retract reel **802**. The wrap spring **1020** may lock during an actuation of the second actuator **202** to tighten the HMD **100** to the user. For example, during rotation of the second actuator **202** in a direction associated with tightening the HMD **100**, the wrap spring **1020** may tighten around the retract reel **802** and pull on the fifth cable **1014** and the sixth cable **1016**. When rotated in an opposite direction, the wrap spring **1020** may not engage the retract reel **802** but may loosen the HMD **100** via the third cable **1008** and the fourth cable **1010**. Depending on the direction of rotation, springs and/or pulleys may take up slack. A viscous clutch **1022** may further be included to overcome a slip torque and prevent the retract reel **704** from spinning with the extend reel **702**.

[0112] In some instances, the diameter ratio of the extend reel **702** (or the extend reel **800**) and the retract reel **704** (or the retract reel **802**) may be configured or designed to match the force ratio otherwise the first cable **1000** (or the third cable **1008** and the fourth cable **1010**) and the second cable **1002** (or the fifth cable **1014** and the sixth cable **1016**) may not spool at an equivalent rate. This may result in slack being introduced into the first cable **1000** or the second cable **1002**. In some instances, the HMD **100** may have an equal force ratio (2:1 and 2:1) for the first cable **1000** (2:1) and the second cable **1002** (2:1) to allow the diameter of the extend reel **702** and the retract reel **704** to be the same size (1:1). If a difference in the force ratios exists (1:1 and 2:1) then the extend reel **702** and the retract reel **704** would also need to have a 2:1 ratio on their diameters.

[0113] FIG. **10**C illustrates a simplified view of the first actuator **112**, the wrap spring **1004**, the extend reel **702**, and the retract reel **704**. As shown, the wrap spring **1004** may wrap around the extend reel **702** and the retract reel **704**. The first cable **1000** may represent an extension cable that is coupled to the extend reel **702**. As such, when the extend reel **702** is rotated, the extend reel **702** may take up the first cable **1000** to lower the display housing **108**. The second cable **1002** may represent a retraction cable that is coupled to the

retract reel **704**. When the retract reel **704** is rotated, the retract reel **704** may take up the second cable **1002** to raise the display housing **108**.

[0114] The first actuator **112** is further shown including a shaft **1024**. The shaft **1024** and the extend reel **702** may be keyed together via an attachment **1026** (e.g., key slot, etc.). This attachment **1026** may transfer a rotational movement of the shaft **1024** to the extend reel **702**.

[0115] During a lowering of the display housing **108**, the extend reel **702** takes up slack in the second cable **1002** while the retract reel **704** may freewheel (e.g., rotate freely). When all slack in the second **1002** has been taken up, the top member **102** may start experiencing relative motion which starts pulling the second cable **1002** out of the retract reel **704**. This is how slack is removed.

[0116] Conversely, during a raising of the display housing **108**, the extend reel **702** and the retract reel **704** are directly coupled together by the wrap spring **1004**. This means that the retract reel **704** spools the second cable **1002** until the cables reach a hard stop in the top member **102**. In either case, the retract reel **704** continues to spool the second cable **1002**. The extend reel **702** meanwhile unspools the first cable **1000**.

[0117] The second actuator **202** may similarly spool and unspool the cables of the first lateral member **114** and the second lateral member **116** for tightening and loosening the HMD **100**.

[0118] FIG. **11** illustrates a routing of cables within the top member **102**, the sleeve **110**, and/or an inner sleeve (shown in FIG. **12**). As shown, one or more cables, such as the first cable **1000** and the second cable **1002** may be used for adjusting the HMD **100**.

[0119] The first cable **1000** may route through the sleeve **110** around one or more pulleys, such as a first pulley **1100**, a second pulley **1102**, and a third pulley **1104**. As shown, the first cable **1000** may enter the sleeve **110**, wrap around the first pulley **1100**, wrap around the second pulley **1102**, and then wrap around the third pulley **1104**. In some instances, the first pulley **1100** may be coupled to the sleeve **110**, while the second pulley **1102** and the third pulley **1104** may be coupled to the inner sleeve. In some instances, and discussed herein, the first cable **1000** may couple or anchor to the top member **102** and/or the inner sleeve at a first position **1106**. An opposite end of the first cable **1000** may operably couple to the first actuator **112** (or another actuator) and/or a spool engaged with the first actuator **112**. For example, the first cable **1000** may engage with the extend reel **702** operably coupled to the first actuator **112**.

[0120] In some instances, the first cable **1000** may correspond to a cable that, when pulled, causes the top member **102** to extend. In turn, the display housing **108** may vertically lower on the user. In such instances, the first cable **1000** may spool around the extend reel **702** when the first cable **1000** is pulled. For example, given the routing of the first cable **1000**, pulling on the first cable **1000** may cause the top member **102** (and/or the inner sleeve) to extend further outward from the sleeve **110**. Meanwhile, simultaneously, the second cable **1002** may unspool to provide the first cable **1000** with slack and allow the first cable **1000** to be pulled for extending top member **102** from the sleeve **110**.

[0121] The second cable **1002** may route through the sleeve **110** around one or more pulleys, such as a fourth pulley **1108** and/or a fifth pulley **1110**. In some instances, the fourth pulley **1108** and/or the fifth pulley **1110** may be coupled to the inner sleeve. Additionally, the second cable **1002** may anchor to the top member **102** at a second position **1112**. An opposite end of the second cable **1002** may operably couple to the first actuator **112** (or another actuator) and/or the retract reel **704** engaged with the first actuator **112**.

[0122] In some instances, the second cable **1002** may correspond to a retraction cable that, when pulled, causes the top member **102** to retract into the sleeve **110**. In turn, the display housing **108** may vertically raise on the user. In such instances, the second cable **1002** may spool around the retract reel **704** when the second cable **1002** is pulled. Given the routing of the second cable **1002**, for example, pulling on the second cable **1002** may cause the top member **102** and/or the inner sleeve to retract into the sleeve **110**. Additionally, to provide pulling of the second cable **1002** (e.g., slack), the first cable **1000** may be unwound from the extend reel **702** to allow the second cable **1002** to spool around the retract reel **704**.

[0123] The first cable **1000** and the second cable **1002** may route to the sleeve **110** within the third tube **208** and the fourth tube **210**, respectively. That is, the first cable **1000** may be disposed within the third tube **208** disposed between the sleeve **110** and the rear housing **200**. The second cable **1002** may be disposed within the fourth tube **210** disposed between the sleeve **110** and the rear housing **200**.

[0124] FIG. **12** illustrates an additional view of the first cable **1000** and the second cable **1002** routed within the sleeve **110**. As discussed above, the top member **102** is shown extending from the sleeve **110**. Furthermore, the top member **102** may operably couple to an inner sleeve **1200**. In some instances, the top member **102** may telescopically extend from and retract into the sleeve **110**. In some instances, the HMD **100** may additionally include the top arm **212** and the top arm **212** may reside within a portion of the sleeve **110**.

[0125] The first cable **1000** is shown being routed around pulleys, such as the first pulley **1100**, the second pulley **1102**, and/or the third pulley **1104**. In some instances, the first pulley **1100**, the second pulley **1102**, and/or the third pulley **1104** may couple to the top member **102**, the sleeve **110**, and/or the inner sleeve **1200**. For example, the first pulley **1100** may couple to the sleeve **110**, while the second pulley **1102** and the third pulley **1104** may couple to the inner sleeve **1200**. In doing so, the first cable **1000** may route within the sleeve **110**, around the first pulley **1100**, around the second pulley **1102**, and then around the third pulley **1104**. Additionally, the first cable **1000** is shown being anchored to the top member **102**, for example, at the first position **1106**. An opposite end of the first cable **1000** may operably couple to the first actuator **112** via the extend reel **702**.

[0126] The second cable **1002** is shown being routed around pulleys, such as the fourth pulley **1108** and the fifth pulley **1110**. The fourth pulley **1108** and/or the fifth pulley **1110** may be coupled to the inner sleeve **1200**. As shown, the second cable **1002** may route within the sleeve **110**, around the fourth pulley **1108** and then around the fifth pulley **1110**. Additionally, in some instances, the second cable **1002** may anchor to the top member **102** at the second position **1112**. An opposite end of the second cable **1002** may operably couple to the first actuator **112** via the retract reel **704**.

[0127] The routing of the first cable **1000** and the second cable **1002** within the top member **102**, the sleeve **110**,

and/or the inner sleeve **1200**, as well as about the pulleys, may effectuate to vertically adjust the HMD **100** on the user. That is, the first cable **1000** and the second cable **1002** may be pulled to vertically lower and raise the HMD **100**, respectively. In some instances, the first pulley **1100**, the second pulley **1102**, the third pulley **1104**, the fourth pulley **1108**, and/or the fifth pulley **1110** may be idler pulleys for guiding and tensioning the first cable **1000** and/or the second cable **1002**, respectively.

[0128] FIG. **13** illustrates a routing of cables within the second lateral member **116**, showing the fourth cable **1010** and the sixth cable **1016**. In some instances, the fourth cable **1010** may wrap around a first pulley **1300** and a second pulley **1302**. In some instances, the first pulley **1300** may be coupled to (e.g., mounted) the second lateral arm **120**. The second pulley **1302** may be coupled to (e.g., mounted) the second lateral member **116**. The fourth cable **1010** may enter the second lateral member **116**, wrap around the first pulley **1300**, wrap around the second pulley **1302**, and then couple (e.g., affix) to the second lateral member **120**. That is, an end of the fourth cable **1010** may couple to the second actuator **202** (or components thereof, such as the extend reel **800**). A second, opposing, end of the fourth cable **1010** may couple to the second lateral member **120**.

[0129] The sixth cable **1016** may enter the second lateral member **116** and wrap around a third pulley **1304** and a fourth pulley **1306**. The third pulley **1304** and/or the fourth pulley **1306** may couple to the second lateral arm **120**. In some instances, the third pulley **1304** may represent an arm of a torsion spring within the second lateral member **116** (as discussed herein). That is, the third pulley **1304** may be omitted and instead, the sixth cable **1016** may wrap around an arm or other protrusion of the torsion spring. A first end of the sixth cable **1016** may couple to the second actuator **202** (or components thereof, such as the retract reel **802**), while a second, opposing end may couple to the second lateral member **120**.

[0130] In some instances, the operation of the fourth cable **1010** and the sixth cable **1016** may resemble a mechanism for extending the second lateral member **116** to various extensions. During an actuation of the second actuator **202** the routing of the fourth cable **1010** and the sixth cable **1016** may cause the HMD **100** to tighten and/or loosen from the user. For example, given the routing of the fourth cable **1010** about the first pulley **1300** and the second pulley **1302**, pulling on the fourth cable **1010** may cause the second lateral member **116** to extend (or otherwise cause the distance between the front **104** and the back **106** of the HMD **100** to increase). This may loosen the HMD **100** from the user. The sixth cable **1016**, meanwhile, may provide slack for the second lateral member **116** to extend. For example, if the second actuator **202** is actuated to loosen the HMD **100**, the sixth cable **1016** may provide slack for the fourth cable **1010** to be pulled so as to extend the second lateral member **116**. That is, pulling on the fourth cable **1010** may wind the fourth cable **1010** around the extend reel **800** and unwind the sixth cable **1016** from the retract reel **802**.

[0131] Alternatively, when the second actuator **202** is actuated to tighten the HMD **100**, the sixth cable **1016** may be pulled to cause the second lateral member **116** to retract. That is, the routing of the sixth cable **1016** about the third pulley **1304** and the fourth pulley **1306** may cause the second lateral member **116** to retract, thereby reducing the distance between the front **104** and the back **106** of the HMD **100**. Here, pulling on the sixth cable **1016** may wind the sixth cable **1016** around the retract reel **802**, and unwind the fourth cable **1010** from the extend reel **800**.

[0132] The second lateral member **116** may be at least partially disposed over the second lateral arm **120**. Tightening the HMD **100** may retract the second lateral arm **120** into the second lateral member **116**, or retract the second lateral member **116** over the second lateral arm **120**. Loosening the HMD **100** may extend the second lateral arm **120** from the second lateral member **116**, or extend the second lateral member **116** from the second lateral arm **120**.

[0133] The fourth cable **1010** and the sixth cable **1016** may route to the second lateral member **116** within the first tube **204** and the second tube **206**, respectively. That is, the fourth cable **1010** may be disposed within the first tube **204** between the second lateral member **116** and the rear housing **200**. The sixth cable **1016** may be disposed within the second tube **206** between the second lateral member **116** and the rear housing **200**.

[0134] The second lateral member **116** is also shown including an end **1308** for pivotably coupling to the display housing **108**. The end **1308** may couple via fasteners, snap-fit, compression fittings, and so forth.

[0135] Although FIG. **13** illustrates the second lateral member **116** and the second lateral arm **120**, the first lateral member **114** may include similar features for receiving the first lateral arm **118** and the first lateral member **114** may similarly extend from and retract over the first lateral arm **118**.

[0136] FIG. **14** illustrates an additional view of the fourth cable **1010** and the sixth cable **1016** routed within the second lateral member **116** and second lateral arm **120**. As discussed above, the second lateral member **116** may be disposed over the second lateral arm **120** such that the second lateral member **116** may extend at various lengths from the second lateral arm **120**. As such, in some instances, the second lateral member **116** may telescopically extend from and retract into the second lateral arm **120**.

[0137] The fourth cable **1010** is shown routed around pulleys, such as the first pulley **1300** and the second pulley **1302**. In some instances, the first pulley **1300** may couple to the second lateral arm **120**. The second pulley **1302** may couple to the second lateral member **116**. Additionally, the fourth cable **1010** may anchor to the second lateral arm **120** at a first position **1400**. An opposite end of the fourth cable **1010** may operably couple to the second actuator **202** via the extend reel **800**.

[0138] The sixth cable **1016** is shown routed around the third pulley **1304** and the fourth pulley **1306**. The third pulley **1304** may couple to the second lateral member **116** while the fourth pulley **1306** may couple to the second lateral arm **120**. The sixth cable **1016** may anchor to the second lateral arm **120** at a second position **1402**. An opposite end of the sixth cable **1016** may operably couple to the second actuator **202** via the retract reel **802**. In some instances, the sixth cable **1016** may not rotate around the third pulley **1304**, but rather, a hook of the torsional spring, as discussed herein.

[0139] The routing of the fourth cable **1010** and the sixth cable **1016** within the second lateral member **116**, as well as about the pulleys, may effectuate to loosen and tighten the HMD **100** on the user. That is, the fourth cable **1010** and the sixth cable **1016** may be pulled to loosen and tighten the HMD **100**, respectively.

[0140] FIGS. **15**A and **15**B illustrate various views of the second lateral member **116** and the sixth cable **1016**. Specifically, in FIGS. **15**A and **15**B, a torsional spring **1500** utilized to maintain tension on the sixth cable **1016**. In FIG. **15**A, the torsional spring **1500** may be in a preloaded or loaded state, while in FIG. **15**B, the torsional spring **1500** may be in a preloaded or loaded state. FIGS. **15**A and **15**B further illustrate the sixth cable **1016** being routed within the second tube **206**.

[0141] The torsional spring **1500** may take up slack within the sixth cable **1016** and/or allow the user to remove the HMD **100** without loosening the fourth cable **1010**. That is, the user may remove the HMD **100** without actuation of the second actuator **202**. For example, after the user has tightened the HMD **100**, it may be inconvenient to loosen the HMD **100** and retighten the HMD **100** at a later instance. By way of example, the user may take a break from using the HMD **100**. Rather than loosening the HMD **100** via the second actuator **202**, the torsional spring **1500** may provide a degree of play to allow the user to pull on the display housing **108** to separate the display housing **108** from the face of the user. With this separation, the user may pull the HMD **100** over and/or above their head. Once the user has stopped pulling on the display housing **108**, the torsional spring **1500** may recoil to pull the sixth cable **1016** and reduce the distance between the front **104** and the back **106** of the HMD **100**.

[0142] In some instances, the torsional spring **1500** may include the third pulley **1304** about which the sixth cable **1016** wraps. Additionally, or alternatively, the sixth cable **1016** may wrap or wind around a projection or hook of the torsional spring **1500**. Regardless of the specific embodiment, the sixth cable **1016** may operably engage with the torsional spring **1500** to provide a degree of travel. Additional details of the torsional spring are discussed herein with regard to FIGS. **16**A-**16**D. In some instances, the torsional spring **1500** may provide a couple millimeters, centimeters, or inches of play for allowing the user to take the HMD **100** off and place the HMD **100** back on. This play may momentarily change a size of the HMD **100**. For example, in the preloaded or unloaded state as shown in FIG. **15**A, the third pulley **1304** or the sixth cable **1016** may loop around the torsional spring **1500** at a first position **1502**. As the user pulls on the HMD **100**, for example, on the display housing **108**, the torsional spring **1500** may coil to locate the third pulley **1304** or the sixth cable **1016** at a second position **1504**. At the second position **1504**, the torsional spring **1500** may be at a maximum coiled position. That is, at the second position **1504**, the HMD **100** may not be pulled further apart. This results in a gap distance **1506**. In some instances, the gap distance may be thirteen millimeters. However, in the retracted state as shown in FIG. **15**A, the torsional spring **1500** may still apply a biasing force to remove slack within the sixth cable **1016**.

[0143] FIGS. **16**A-**16**D illustrate various views of the torsional spring **1500**. Particularly, FIG. **16**A illustrates an isometric view of the torsional spring **1500**, FIG. **16**B illustrates a first side view of the torsional spring **1500**, FIG. **16**C illustrates an end view of the torsional spring **1500**, and FIG. **16**D illustrates a second side view of the torsional spring **1500**.

[0144] The torsional spring **1500** may reside within the first lateral member **114** and the second lateral member **116**. For example, the torsional spring **1500** may reside within the end **1308** of the second lateral member **116**. The torsional spring **1500** includes body coils **1600** for providing a biasing nature to the torsional spring **1500**. A first end of the torsional spring **1500** may include a static leg **1602**. The static leg **1602** may remain stationary during a winding and unwinding of the torsional spring **1500**. In some instances, the static leg **1602** may couple to the first lateral member **114** and/or the second lateral member **116** for remaining stationary.

[0145] A second end of the torsional spring **1500** includes a dynamic leg **1604**. Noted above, the sixth cable **1016** may wrap around the dynamic leg **1604**. For example, the sixth cable **1016** may loop around the dynamic leg **1604** for pulling on the dynamic leg **1604** when the user provides a biasing force to the display housing **108**. The engagement between the sixth cable **1016** and the dynamic leg **1604** may resemble a pulley such that the sixth cable **1016** may loop or wind around the dynamic leg **1604**. Alternatively, the third pulley **1304** may be disposed around the dynamic leg **1604**

[0146] The torsional spring **1500** may further include a stop leg **1606**. The stop leg **1606** may prevent the torsional spring **1500** from further coiling or uncoiling. For example, returning briefly to FIG. **15**B, the second lateral member **116** may have a degree of travel equal to the gap distance **1506**. When the second lateral member **116** is extended by the gap distance **1506**, the stop leg **1606** may prevent the second lateral member **116** from being pulled further. This may further prevent a winding nature of the torsional spring **1500**. In such instances, the stop leg **1606** may contact a projection of the first lateral member **114** or the second lateral member **116**.

[0147] FIG. **17** illustrates a front isometric view of a HMD **1700** that, in some instances, may include similar components as the HMD **100**. For example, the HMD **1700** may include a front **1702** and a back **1704**. The front **1702** of the HMD **1700** may include a display housing **1706** that houses a display for outputting content to the user. The back **1704** of the HMD **1700** may include a rear housing **1708**.

[0148] The display housing **1706** may couple to the rear housing **1708** via one or more members. For example, the HMD **1700** may include a first lateral member **1710** that engages with a first lateral arm **1712** extending from a rear harness **1714**. A second lateral member **1716** may engage with a second lateral arm **1718** that extends from the rear harness **1714**. The first lateral member **1710** may extend from various lengths relative to the first lateral arm **1712** for loosening and tightening the HMD **1700** to the user. That is, as similarly discussed above with regard to the first lateral member **114**, the first lateral member **1710** may slide over or otherwise engage with the first lateral arm **1712** for adjusting in length. Similarly, the second lateral member **1716** may engage with the second lateral arm **1718**.

[0149] Furthermore, the HMD **1700** may include a top member **1720** that is disposed over a crown of the user when the HMD **1700** is worn. The top member **1720** may adjust in length for adjusting a vertical position of the display housing **1706** on the face of the user.

[0150] In some examples, the HMD **1700** may include actuators for adjusting a length of the first lateral member **1710**, the second lateral member **1716**, and the top member **1720**. These actuators may engage with cabling mechanism of the HMD **1700**, as similarly discussed above with regard to the HMD **100**. For example, cabling mechanisms of the first lateral member **1710** and the second lateral member

1716 may engage with an actuator disposed at the back **1704** of the rear housing **1708**. Moreover, cabling mechanisms of the top member **1720** may engage with a first actuator **1722** at the rear housing **1708**. As discussed in detail herein, the cabling mechanisms may route through one or more tubes of the HMD **1700**.

[0151] The HMD **1700** may include loudspeakers to output audio to the user. For instance, the HMD **1700** may include a first loudspeaker **1724** located adjacent a left ear of the user and a second loudspeaker **1726** located adjacent to a right ear of the user. As shown in FIG. **17**, the first loudspeaker **1724** may couple to the first lateral member **1710** and the second loudspeaker **1726** may couple to the second lateral member **1716**. As such, when the first lateral member **1710** and the second lateral member **1716** are extended and/or retracted, the first loudspeaker **1724** and the second loudspeaker **1726** may correspondingly move with the first lateral member **1710** and the second lateral member **1716**, respectively.

[0152] In some instances, the first loudspeaker **1724** and/or the second loudspeaker **1726** may pivotably couple to the first lateral member **1710** and the second lateral member **1716**, respectively. This may position the first loudspeaker **1724** and the second loudspeaker **1726** adjacent to the left ear and the right ear of the user, respectively. For example, and as discussed in detail herein, the first loudspeaker **1724** may couple to the first lateral member **1710** via a ball joint. The ball joint may provide the first loudspeaker **1724** with varying degrees of movement to position the first loudspeaker **1724**. Similarly, the second loudspeaker **1726** may couple to the second lateral member **1716** via a ball joint for positioning the second loudspeaker **1726**. Additionally, the first loudspeaker **1724** and/or the second loudspeaker **1726** may slide to longitudinally adjust. This lateral movement, in additional to the pivotable movement, provides the user options to reposition the first loudspeaker **1724** and the second loudspeaker **1726** given that the first lateral member **1710** and the second lateral member **1716** may extend at varying lengths.

[0153] Although the first loudspeaker **1724** and the second loudspeaker **1726** are shown being coupled to the first lateral member **1710** and the second lateral member **1716**, respectively, the first loudspeaker **1724** and the second loudspeaker **1726** may couple to the rear housing **1708**, or other portions of the HMD **2200**.

[0154] FIG. **18** illustrates a rear isometric view of the HMD **1700**. The back **106** of the HMD **100** is shown including the rear housing **1708**. The rear housing **1708** may include similar components as described above with regard to the rear housing **200** (e.g., antennas, processors, PCBs, etc.). Additionally, the rear housing **1708** is shown including the first actuator **1722** and a second actuator **1800**.

[0155] Within the rear housing **200**, the first actuator **1722** may engage with the cabling mechanism of the top member **1720** and the second actuator **1800** may engage with the cabling mechanisms of the first lateral member **1710** and/or the second lateral member **1716**. The first actuator **1722** and the top member **1720** may be used to vertically adjust the HMD **100** on the user, or relative to the eyes of the user, while the second actuator **1800** may be used to tighten and loosen the HMD **100**. As also introduced above, the rear harness **1714** may include the first lateral arm **1712** and the second lateral arm **1718** that engage with or within the first lateral member **1710** and the second lateral member **1716**, respectively.

[0156] FIGS. **19**A and **19**B illustrate a front view and a back view of the HMD **1700**, respectively. The first loudspeaker **1724** may couple to the first lateral member **1710** via a first loudspeaker arm **1900** and the second loudspeaker **1726** may couple to the second lateral member **1716** via a second loudspeaker arm **1902**. As discussed herein, the first loudspeaker arm **1900** may couple to the first lateral member **1710** via a ball joint for adjusting the position of the first loudspeaker **1724**. Similarly, the second loudspeaker arm **1902** may couple to the second lateral member **1716** via a ball joint for adjusting a position of the second loudspeaker **1726**. The first loudspeaker arm **1900** and the second loudspeaker arm **1902** may also slide in a directional **1904**. The pivotable nature of the first loudspeaker arm **1900** and the second loudspeaker arm **1902**, as well as a sliding nature in the direction **1904**, permits the first loudspeaker **1724** and the second loudspeaker **1726** to reposition according to user preferences.

[0157] In FIG. **19**B, the HMD **1700** may include various tubes for routing or channeling cables of the cabling mechanisms. For example, a first tube **1906** and a second tube **1908** are shown routing from the rear housing **1708** to the top member **1720**. The first tube **1906** and the second tube **1908** may channel respective cables that are used to extend and retract the top member **102**. A third tube **1910** and a fourth tube **1912** are shown routing from the first lateral member **1710** to the rear housing **1708**. The third tube **1910** and the fourth tube **1912** may channel respectively cables that are used to extend and retract the first lateral member **1710**. A fifth tube **1914** and a sixth tube **1916** are shown routing from the second lateral member **1716** to the rear housing **1708**. The fifth tube **1914** and the sixth tube **1916** may channel respectively cables that are used to extend and retract the second lateral member **1716**.

[0158] At the **1704** back of the HMD **1700**, cabling mechanisms may engage with the first actuator **1722** and the second actuator **1800**. For example, the cabling mechanisms of the top member **1720** may engage with the first actuator **1722**. The engagement of the cabling mechanisms of the top member **1720** with the first actuator **1722** may be similar to that described above with regard to the HMD **100**. Further, the cabling mechanisms of the first lateral member **1710** and the second lateral member **1716** may engage with the second actuator **1800**. The engagement of the cabling mechanisms of the first lateral member **1710** and the second lateral member **1716** with the second actuator **1800** may be similar to that described above with regard to the first lateral member **114** and the second lateral member **116** engaging with the second actuator **202**, respectively. Moreover, cables may route within the first lateral member **1710** and the second lateral member **1716** as similarly discussed above with regard to the first lateral member **114** and the second lateral member **116**.

[0159] FIG. **20**A illustrates a cross-sectional view showing components of the HMD **100**, such as the first lateral member **1710**, the first loudspeaker **1724**, and the first loudspeaker arm **1900**. In some instances, the view shown in FIG. **20**A may represent a front cross-sectional view, from a front **1702** towards a back **1704** of the HMD **1700**. Although FIG. **20**A illustrates and discusses components of the first lateral member **1710**, the first loudspeaker **1724**, and the first

loudspeaker arm **1900** it is to be understood that the second lateral member **1716**, the second loudspeaker **1726**, and the second loudspeaker arm **1902** may include similar components and/or function similarly.

[0160] The first loudspeaker **1724** may reside within a shell **2000**. The shell **2000**, as shown, may include a generally semi-spherical shape within which the first loudspeaker **1724** resides. The first loudspeaker **1724** may be oriented to output sound towards a direction of the user. The first loudspeaker **1724** may include a speaker grill **2002** having orifices that permit sound generated by the first loudspeaker **1724** to exit from within the shell **2000** and towards a direction of the user. The speaker grill **2002** may couple to the shell **2000** via snap-fit, fasteners, adhesives, etc.

[0161] The first loudspeaker arm **1900** may slidably engage with/within a ball joint **2004** for longitudinally translating within the first loudspeaker arm **1900**. For example, as discussed above, the first loudspeaker arm **1900** may engage with the ball joint **2004** (or components thereof) to permit the first loudspeaker arm **1900** to translate in the direction **1904**. The direction **1904**, in some instances, may allow the first loudspeaker **1724** to horizontally and/or vertically position relative to the user. For example, the ball joint **2004** may include a flange that engages within a slide or channel of the first loudspeaker arm **1900**. This engagement may permit the first loudspeaker arm **1900** to slidably engage with the ball joint **2004**. In other words, the ball joint **2004** may slide within the first loudspeaker arm **1900** for being disposed at various positions along the length of the first loudspeaker arm **1900**.

[0162] The ball joint **2004** also pivotably couple to the first lateral member **1710** for changing a position and/or orientation of the first loudspeaker **1724**. For example, the ball joint **2004** may provide the first loudspeaker arm **1900** with rotational and/or pivotable movement. As such, the first loudspeaker **1724** may be arranged at various positions and/or orientations. For example, as the HMD **1700** accommodates various users, the first loudspeaker **1724** may adjust to accommodate different users.

[0163] In some instance, the ball of the ball joint **2004** may extend from the first lateral member **1710**, while the socket of the ball joint **2004** may be embodied within the first loudspeaker arm **1900**. The first loudspeaker arm **1900** may couple to the first lateral member **1710** via an engagement of the ball and socket.

[0164] In some instances, wires, cables, or other filaments may route through the ball joint **2004** for communicatively coupling the first loudspeaker **1724** with other portions of the HMD **1700**. For example, as shown, one or more wires **2006** may route through the ball joint **2004**. The wires **2006** may provide audio to the first loudspeaker **1724** for output. In doing so, the wires **2006** may route through the first loudspeaker arm **1900** to reach the first loudspeaker **1724**. Moreover, the wires **2006** may route through the first lateral member **1710**. However, in some instances, the HMD **1700** may include additional wires that are routed through the first lateral member **1710** and/or the first loudspeaker arm **1900** for communicatively coupling to the first loudspeaker **1724**.

[0165] FIG. **20**B illustrates the first loudspeaker **1724**. In some instances, the view shown in FIG. **20**B may represent a top cross-sectional view, from a top of the HMD **1700** towards a bottom of the HMD **1700**. As noted above, the first loudspeaker arm **1900** may couple to the first lateral member **1710** via the ball joint **2004** and the wires **2006** may route through the ball joint **2004** and the first loudspeaker arm **1900**.

[0166] FIG. **21** illustrates a detailed view of the HMD **1700** showing a routing of a wires used to vertically adjust the position of the HMD **1700** on the user. As introduced above, the HMD **1700** may include the first tube **1906** and the second tube **1908** that extend from the rear housing **1708**. In some instances, the HMD **1700** may include an additional tube, such as a seventh tube **2100**, extending from the rear housing **1708**. The first tube **1906** and the seventh tube **2100** may be attached or coupled together.

[0167] The first tube **1906** may receive a first inner tube **2102** and the second tube **1908** may receive a second inner tube **2104**. The first inner tube **2102** and the second inner tube **2104** may couple to the display housing **1706**. As shown, the first inner tube **2102** and the second inner tube **2104** may extend from the display housing **1706** and into the first tube **1906** and the second tube **1908**, respectively. The first inner tube **2102** and the second inner tube **2104** may translate and/or slide into the first tube **1906** and the second tube **1908**, respectively. In some instances, the first tube **1906** and/or the second tube **1908** may include mechanisms for permitting the translation of the first inner tube **2102** and the second inner tube **2104**, respectively (e.g., channels, tabs, slots, protrusions, etc.).

[0168] The HMD **1700** includes wires or cables that route through the first tube **1906**, the second tube **1908**, the seventh tube **2100**, the first inner tube **2102**, and/or the second inner tube **2104**. For example, the HMD **1700** may include a first cable **2106** and a second cable **2108**. In some instances, the first cable **2106** may correspond to an extension cable that when pulled, causes the display housing **1706** to lower on the user. The second cable **2108**, meanwhile, may correspond to a retraction cable that when pulled, causes the display housing **1706** to raise on the user. The first cable **2106** and the second cable **2108** may operably couple to the first actuator **1722** for extending and retracting in length (e.g., via spools or reels).

[0169] As shown, the first cable **2106** may route from the rear housing **1708**, through the seventh tube **2100** and then into the first tube **1906**. In some instances, an end of the first cable **2106** may couple to the first inner tube **2102** as a position **2110**. Additionally, the first cable **2106** may wrap or be wound around open or more pulleys within, or external to, the seventh tube **2100** and/or the first tube **1906**. Additionally, the pulleys may be located on the top member **1720**. The second cable **2108** may route through the second tube **2108**, through the second inner tube **2104**, and the couple to the display housing **1706** at a position **2112**.

[0170] FIG. **22** illustrates a HMD **2200** having a dual-concentric knob **2202** disposed at a back of the HMD **2200**. In some instances, the HMD **2200** may include similar components as the HMD **100** and/or the HMD **1700**. However, as shown in FIG. **22**, the HMD **100** may include the dual-concentric knob **2202** for tightening, loosening, and/or adjusting the vertical position of the HMD **2200** on the user.

[0171] The dual-concentric knob **2202** may engage with one or more members for tightening and loosening the HMD **2200** to the user and/or adjusting a vertical position of the HMD **2200**. In some instances, the one or more members may engage with the dual-concentric knob **2202** within a rear housing of the HMD **2200**. For example, a top member may extend through a top sleeve **2204** and engage with the

dual-concentric knob **2202**. Lateral members may extend through a first lateral sleeve **2206** and a second lateral sleeve **2208**, respectively. In some instances, the top sleeve **2204**, the first lateral sleeve **2206**, and/or the second lateral sleeve **2208** may represent a harness of the HMD **2200**, or a rear housing of the HMD **2200**, that engages with a back of the head.

[0172] The dual-concentric knob **2202** may include a first knob **2210** and a second knob **2212**. The first knob **2210** may operate to adjust the vertical position of a display (or display housing) of the HMD **2200** on the head. The second knob **2212** may operate to tighten and loosen the HMD **100** to the user. That is, the top member disposed within the top sleeve **2204** may operably engage with the first knob **2210**. Lateral members disposed within the first lateral sleeve **2206** and the second lateral sleeve **2208** may operably engage with the second knob **2212**.

[0173] Discussed herein, the first knob **2210** and the second knob **2212** may include gears that engage with slots of the top member and the lateral members, respectively. The lateral members may overlap to permit the lateral members to tighten and loosen. The first knob **2210** and the second knob **2212** may be independently actuate in multiple directions. For example, the first knob **2210** may engage with the top member and rotated in a first direction (e.g., clockwise) to lower the display on the user, and rotated in a second direction (e.g., counterclockwise) to raise the display on the user. The second knob **2212** may engage with lateral members and rotated in a first direction (e.g., clockwise) to loosen the HMD **2200**, and rotated in a second direction (e.g., counterclockwise) to tighten the HMD **2200**.

[0174] FIGS. **23**A and **23**B illustrate detailed views of the dual-concentric knob **2202**. Particularly, FIG. **23**A illustrates a side view of the dual-concentric knob **2202**, and FIG. **23**B illustrates a cross-sectional view of the dual-concentric knob **2202**. As shown, the first knob **2210** may be nestled, housed, or reside within at least a portion of the second knob **2212**.

[0175] The first knob **2210** may include a first member, mechanism, or a shaft **2300** that extends through the second knob **2212** for adjusting a vertical position of the HMD **2200**. A first gear **2302** of the first shaft **2300** may engage with slots disposed in the top member, or that extend along a length of the top member. Rotating the first knob **2210** may cause the first gear **2302** to engage with the slots in the top member for raising or lowering the display housing. A thrust bearing between the first gear **2302** and the second gear **2306** keeps bands separated.

[0176] Similarly, the second knob **2212** may include a second member, mechanism, or a shaft **2304**. In some instances, the second shaft **2304** may be integrated within the second knob **2212** (e.g., as a single component). The second shaft **2304** may include a second gear **2306** that engages with slots disposed in the lateral members, or that extend along a length of the lateral members. As shown, the second gear **2306** may have a greater longitudinal length for engaging with multiple members (e.g., two lateral members) as compared to the first gear **2302** that may engage with a single member (e.g., the top member).

[0177] The first shaft **2300** may couple to a third gear **2308** for preventing backdrive of the top member and/or the first knob **2210**. The third gear **2308** may represent a face gear that engages with a complimentary face gear of a rear housing. For example, teeth of the third gear **2308** may engage with teeth of an additional gear in the rear housing to prevent backdrive. Similarly, the second shaft **2304** may couple to a fourth gear **2310** for preventing backdrive of the lateral members and/or the second knob **2212**. The fourth gear **2310** may represent a face gear that engages with a complimentary face gear of a rear housing. For example, teeth of the fourth gear **2310** may engage with teeth of an additional gear on the housing to prevent backdrive.

[0178] In some instances, a gap distance **2312** may be interposed between the first knob **2210** and the second knob **2212**. A spring **2314** may wrap around a portion of the first shaft **2300**, between a surface of the first knob **2210** and a surface of the second knob **2212**, for disposing the first knob **2210** away from the second knob **2212**. In instances where the user wishes to vertically adjust the position of the display housing, the user may push on the first knob **2210** to deflect the first knob **2210** inward. This deflection may uncouple the third gear **2308** from the complimentary gear in the rear housing and allow the user to lower or raise the display housing. Although FIG. **23**B illustrates the spring **2314** in a particular location, the spring **2314** may be located elsewhere within the rear housing and/or the dual-concentric knob **2202**.

[0179] FIGS. **24**A and **24**B illustrate isometric views of the dual-concentric knob **2202**. As described above, the dual-concentric knob **2202** may include multiple actuators, such as the first knob **2210** that adjusts the vertical position of the display housing, and the second knob **2212** that operates to tighten and loosen against lateral sides of the head.

[0180] As shown, the first knob **2210** and the second knob **2212** may be in stacked relationship. In some instances, the first knob **2210** may be disposed in front of the second knob **2212** and the second knob **2212** may include a larger diameter than the first knob **2210**. Additionally, the first knob **2210** and the second knob **2212** may be concentric.

[0181] FIG. **25** illustrates a rear isometric view of the HMD **2200**, showing members engaged with the dual-concentric knob **2202**. The HMD **2200** may include a top member **2500** that engages with the first knob **2210** of the dual-concentric knob **2202** for adjusting a vertical position of a display. Additionally, the HMD **2200** may include a first lateral member **2502** and a second lateral member **2504** that engage with the second knob **2212** of the dual-concentric knob **2202** for tightening/loosening the HMD **2200**. Opposing ends of the top member **2500**, the first lateral member **2502**, and the second lateral member **2504** not coupled or engaged with the dual-concentric knob **2202** may engage with a display or a display housing. Additionally, each of the top member **2500**, the first lateral member **2502**, and the second lateral member **2504** may include slots for engaging with the first knob **2210** or the second knob **2212**, respectively.

[0182] FIG. **26** illustrates a rear view showing the dual-concentric knob **2202** engaged with the top member **2500**, the first lateral member **2502**, and the second lateral member **2504**.

[0183] The top member **2500** includes slots **2600** that extend along at least a portion of the length of the top member **2500** and which are configured to engage with the first gear **2302** of the first knob **2210**. Depending on the direction of actuation, the first knob **2210** engages with the slots **2600** for shortening a length of the top member **2500** (e.g., raising the display) or increasing a length of the top member **2500** (e.g., lowering the display).

[0184] The first lateral member **2502** includes slots **2602** that extend along at least a portion of the length of the first lateral member **2502** and which are configured to engage with the second gear **2306** of the second knob **2212**. Additionally, the second lateral member **2504** includes slots **2604** that extend along at least a portion of the length of the second lateral member **2504** and which are configured to engage with the second gear **2306** of the second knob **2212**. Depending on the direction of actuation, the second knob **2212** engages with the slots **2602** and the slots **2604** for shortening a length of the first lateral member **2502** and the second lateral member **2504** (e.g., tightening the HMD **2200**), or increasing a length of the first lateral member **2502** and the second lateral member **2504** (e.g., loosening the HMD **2200**).

[0185] In some instances, the top member **2500**, the first lateral member **2502**, and the second lateral member **2504** include flexible and/or semi-rigid materials for routing alongside or over the top of the head. For example, the top member **2500**, the first lateral member **2502**, and the second lateral member **2504** may be made from materials such as plastic, rubber, composites, etc.

[0186] FIG. **27** illustrates a rear view of the HMD **2200**, showing the dual-concentric knob **2202** engaged with the top member **2500**, the first lateral member **2502**, and the second lateral member **2504**. Rotating the second knob **2212** in a first direction (e.g., clockwise) increases an overlapping relationship between the first lateral member **2502** and the second lateral member **2504**. Rotating the second knob **2212** in the opposite direction will decrease the overlapping relationship.

[0187] FIGS. **28**A-**28**C illustrate a planetary gear drive **2800** that may be used for tightening and loosening a HMD. In some examples, the planetary gear drive **2800** may be embodied within the HMD **2200**.

[0188] The planetary gear drive **2800** is shown including gears and ratchets for tightening and loosening the HMD and/or vertically adjusting a position of a display of the HMD on the user. As shown in FIG. **28**A, the planetary gear drive **2800** may include a knob **2802**. The knob **2802** may operably couple to a first gear **2804** and a second gear **2806**. The first gear **2804** may engage with slots of lateral members for tightening and loosening the HMD to a user (e.g., rack and pinion). The operation of the first gear **2804** with the lateral members may be similar to that as described above with regard to the second gear **2306**, the first lateral member **2502**, and the second lateral member **2504**. The second gear **2806** may engage with slots of the top member for raising and losing the display on the user (e.g., rack and pinion). The operation of the second gear **2806** with the top member may be similar to that as described above with regard to the first gear **2302** and the top member **2500**. Moreover, the planetary gear drive **2800** may include a third gear **2808** and a fourth gear **2810** for preventing backdrive.

[0189] In some instances, the planetary gear drive **2800** may be configured to extend/retract the top member, the first lateral member, and/or the second lateral member simultaneously (i.e., concurrently). That is, the planetary gear drive **2800** may include a single knob for adjusting the top member, the first lateral member, and/or the second lateral member simultaneously. The planetary gear drive **2800** may have planetary gears **2812** for extending/retracting the top member and the first lateral member/the second lateral member at different lengths. For example, with the planetary gears **2812**, a quarter turn of the knob **2802** may retract the top member by a first amount, and may retract the first lateral member and the second later member by a second amount that is different than the first amount.

[0190] FIGS. **29**A-**29**C illustrates an example gasket **2900** that couples to the display housing **108** (or a frame of the display housing **108**), the display housing **1706** (or a frame of the display housing **1706**), and/or a display housing of the HMD **2200**.

[0191] Beginning with FIG. **29**A, the gasket **2900** may include a first side **2902** (or surface) for coupling to the display housing **108** and an opposing, second side **2904** (or surface) for sealing against the user. The second side **2904** of the gasket **2900** may include features, contours, surfaces, and shapes to match ergonomic factors of the user. This may allow the gasket **2900** to wrap around a front of the head of the user and seal against the face of the user. For example, when the HMD **100** and/or the HMD **1700** fastens to the user, the gasket **2900** may prevent light, or may substantially prevent light, permeating into an interior of the display housing **108** and/or the display housing **1706**.

[0192] As shown, the second side **2904** of the gasket **2900** may include multiple curved surfaces that generally correspond to the facial features of the user. For example, the second side **2904** may include, or be made up of, a forehead portion **2906**, a first cheek portion **2908**, a second cheek portion **2910**, and a nose portion **2912** that extends between the first cheek portion **2908** and the second cheek portion **2910**. The forehead portion **2906** may curve and/or bend, across the forehead of the user, to seal the gasket **2900** to the user along a top. The first cheek portion **2908** and the second cheek portion **2910** may seal the gasket **2900** at lateral sides (e.g., against the cheeks of the user). The nose portion **2912** may seal the gasket **2900** along a bottom.

[0193] Collectively, the forehead portion **2906**, the first cheek portion **2908**, the second cheek portion **2910**, and the nose portion **2912** may assist in placing or positioning the HMD **100** and/or the HMD **1700** relative to the eyes of the user. Additionally, the forehead portion **2906**, the first cheek portion **2908**, the second cheek portion **2910**, and the nose portion **2912** may provide a continuous surface shaped to abut and conform to the head (or face) of the user.

[0194] To provide a customized fit according to user preferences, the gasket **2900** is configured to deform and warp. For example, as introduced above, the HMD **100** and/or the HMD **1700** may be tightened to the head of the user to provide different feels and/or to securely mount to the user. In such instances, and depending on the level of tightness, the gasket **2900** may maintain contact with the face of the user. In this sense, the gasket **2900** may be elastic or include a degree of travel for abutting against the face of the user. This may be accomplished through deforming (e.g., expansion and contraction) of the gasket **2900**. For example, the gasket **2900** may include an intermediate portion **2914** interposed between the first side **2902** and the second side **2904**. The intermediate portion **2914** may deflect, bend, roll, scrunches during a tightening of the HMD **100** and/or the HMD **1700**. Moreover, the intermediate portion **2914** may extend, unroll, or expand during a loosening of HMD **100** and/or the HMD **1700**. Such deformation of the intermediate portion **2914** may effectuate to maintain contact with the face of the user during loosening and tightening of the HMD **100** and/or the HMD **1700** to the user.

[0195] In some instances, the gasket **2900** may be permanently coupled to the display housing **108** and/or the display housing **1706** via adhesives, fasteners, clamping, overholding, and so forth. Additionally, or alternatively, in some instances, the gasket **2900** may be removably coupled to the display housing **108** and/or the display housing **1706** via magnets, hook and loop, press fits, snap-fit, and so forth. For example, the gasket **2900** may be removably coupled to the display housing **108** and/or the display housing **1706** for cleaning and/or sanitizing. Additionally, the display housing **108** and/or the display housing **1706** may be configured to receive a plurality of gaskets **2900**, where each gasket **2900** may include respective contours, shapes, sizes, and so forth. By interchanging the gasket **2900** the user may achieve different feels and/or for securely mounting the HMD **100** and/or the HMD **1700**, and/or different gaskets may be for differently sized or shaped faces.

[0196] The gasket **2900** may include a deformable material that conforms to the shape of the user. For example, and in some instances, the gasket **2900** may be made of an elastomeric material (e.g., synthetic or rubber material. Such material may assist in conforming to the user, provide a tight seal, and allow the gasket **2900** to be used repeatedly disinfected, cleaned, and reused.

[0197] FIG. **29**B illustrates a rear view of the gasket **2900**, showing the second side **2904**. As introduced above, the second side **2904** may include a continuous body for adjoining and sealing against the face of the user. In some instances, the second side **2904** may include a surface for sealing against the face of the user. The surface may be flat, curved, and/or rounded. Such contours may assist in limiting the ingress of light and/or for providing a comfortable feel.

[0198] FIG. **29**C illustrates a cross-sectional view of the gasket **2900**, taken along line A-A of FIG. **29**B. As shown, the first side **2902** of the gasket **2900** may include a surface for coupling to the display housing **108** and/or the display housing **1706**, while the second side **2904** of the gasket **2900** may include a surface for engaging the face of the user. In some instances, the surface of the second side **2904** may include certain lengths, widths, and/or heights for abutting against and sealing to the face of the user. Moreover, as discussed above, the intermediate portion **2914** may span between the first side **2902**(or a surface, body, etc. of the first side **2902**) and the second side **2904** (or a surface, body, etc. of the first side **2902**).

[0199] The intermediate portion **2914** may extend and contact to various lengths based on the tightening and loosening of the HMD **100** and/or the HMD **1700** and to maintain contact with the user. For example, as shown in FIG. **29**C, the intermediate portion **2914** may be in an extended state (e.g., the intermediate portion **2914** may not experience compression forces). However, if the HMD **1700** and/or the HMD **1700** is tightened, the intermediate portion **2914** may constrict, buckle, roll, or fold upon itself. For example, the intermediate portion **2914** near the forehead portion **2906** may deflect downwards towards the nose portion **2912**. Upon being loosened, the intermediate portion **2914** may expand, unroll, or unfold. This elasticity of the intermediate portion **2914** may provide the gasket **2900** with a degree of movement and/or travel for maintaining contact with the face of the user.

[0200] While various examples and embodiments are described individually herein, the examples and embodiments may be combined, rearranged, and modified to arrive at other variations within the scope of this disclosure.

[0201] Although the subject matter has been described in language specific to structural features and/or methodological acts, it is to be understood that the subject matter defined in the appended claims is not necessarily limited to the specific features or acts described. Rather, the specific features and acts are disclosed as illustrative forms of implementing the claims.

1. A head-mounted display comprising:
a display housing including a display;
a rear housing including:
a first actuator; and
a second actuator;
a rear harness coupled to the rear housing, the rear harness including:
a first arm;
a second arm; and
a third arm;
a sleeve coupled to the first arm and extending in a direction towards the display housing;
a first member including a first end coupled to the display housing and a second end disposed within the sleeve, the first member operably coupled to the first arm;
a second member coupled to a first side of the display housing and extending in a direction towards the rear housing, the second member operably engaging with the second arm;
a third member coupled to a second side of the display housing and extending in a direction towards the rear housing, the second member operably engaging with the third arm;
a first cabling mechanism configured to extend and retract the first member at various lengths from the sleeve, the first cabling mechanism operably engaging with the first actuator;
a second cabling mechanism configured to extend and retract the second member at various lengths from the second arm, the second cabling mechanism operably engaging with the second actuator; and
a third cabling mechanism configured to extend and retract the third member at various lengths from the third arm, the third cabling mechanism operably engaging with the second actuator.

2. The head-mounted display of claim **1**, further comprising a face gasket including:
a first portion coupled to the display housing;
a second portion for engaging with a user; and
an intermediate portion disposed between the first portion and the second portion, wherein the intermediate portion is configured to deform to adjust a distance interposed between the first portion and the second portion.

3. The head-mounted display of claim **1**, further comprising:
a first loudspeaker arm including:
a first end pivotably coupled to the second member; and
a second end;
a first loudspeaker coupled to the second end of the first loudspeaker arm;
a second loudspeaker arm including:
a first end pivotably coupled to the third member; and
a second end; and
a second loudspeaker coupled to the second end of the second loudspeaker arm.

4. The head-mounted display of claim **1**, wherein:
the first cabling mechanism includes:
one or more first pulleys;
one or more second pulleys;
a first cable routed around the one or more first pulleys; and
a second cable routed around the one or more second pulleys;
the second cabling mechanism includes:
one or more third pulleys;
one or more fourth pulleys;
a third cable routed around the one or more third pulleys; and
a fourth cable routed around the one or more fourth pulleys; and
the third cabling mechanism includes:
one or more fifth pulleys;
one or more sixth pulleys;
a fifth cable routed around the one or more fifth pulleys; and
a sixth cable routed around the one or more sixth pulleys.

5. The head-mounted display of claim **4**, wherein:
actuating the first actuator in a first direction causes the first cable to extend the first member from the first arm;
actuating the first actuator in a second direction causes the second cable to retract the first member over the first arm;
actuating the second actuator in a third direction causes the third cable to extend the second member from the second arm;
actuating the second actuator in a fourth direction causes the fourth cable to retract the second member over the second arm;
actuating the second actuator in the third direction causes the fifth cable to extend the third member from the third arm; and
actuating the second actuator in the fourth direction causes the sixth cable to retract the third member over the third arm.

6. The head-mounted display of claim **1**, wherein the rear harness pivotably couples to the rear housing via a ball joint.

7. A head-mounted display comprising:
a front;
a back;
a first member extending between the front and the back, the first member being adjustable via an actuation of a first rotatable actuator and a first cabling mechanism;
a second member extending between the front and the back, the second member being adjustable via an actuation of a second rotatable actuator and a second cabling mechanism; and
a third member extending between the front and the back, the third member being adjustable via the actuation of the second rotatable actuator and a third cabling mechanism.

8. The head-mounted display of claim **7**, further comprising:
a first loudspeaker pivotably coupled to the second member via a first ball joint; and
a second loudspeaker pivotably coupled to the third member via a second ball joint.

9. The head-mounted display of claim **8**, further comprising a first loudspeaker arm including the first loudspeaker and a second loudspeaker arm including the second loudspeaker, and wherein:
the first loudspeaker arm slidably engages with the first ball joint; and
the second loudspeaker arm slidably engages with the second ball joint.

10. The head-mounted display of claim **7**, wherein:
the first cabling mechanism comprises:
one or more first pulleys associated with retracting the first member;
one or more second pulleys associated with extending the first member;
a first cable routed around the one or more first pulleys; and
a second cable routed around the one or more second pulleys;
the second cabling mechanism comprises:
one or more third pulleys associated with retracting the second member;
one or more fourth pulleys associated with extending the second member;
a third cable routed around the one or more third pulleys; and
a fourth cable routed around the one or more fourth pulleys; and
the third cabling mechanism comprises:
one or more fifth pulleys associated with retracting the third member;
one or more sixth pulleys associated with extending the third member;
a fifth cable routed around the one or more fifth pulleys; and
a sixth cable routed around the one or more sixth pulleys.

11. The head-mounted display of claim **10**, further comprising a first arm extending from the back and operably engaging with the first member, a second arm extending from the back and operably engaging with the second member, and a third arm extending from the back and operably engaging with the third member, and wherein at least one of:
the one or more first pulleys or the one or more second pulleys are at least one of disposed within or coupled to the first member or the first arm;
the one or more third pulleys or the one or more fourth pulleys are at least one of disposed within or coupled to the second member or the second arm; or
the one or more fifth pulleys or the one or more sixth pulleys are at least one of disposed within or coupled to the third member or the third arm.

12. The head-mounted display of claim **10**, wherein:
the first rotatable actuator operably couples to the first cable and the second cable; and
the second rotatable actuator operably couples to the third cable, the fourth cable, the fifth cable, and the sixth cable.

13. A wearable display comprising:
a front;
a back;
a first member extending between the front and the back, the first member including first slots extending along a length of the first member;

a second member extending between the front and the back, the second member including second slots extending along a length of the second member;

a third member extending between the front and the back, the third member including third slots extending along a length of the third member;

a first actuator including a first gear, wherein the first gear is configured to engage with the first slots; and

a second actuator including a second gear, wherein the second gear is configured to engage with the second slots and the third slots.

14. The wearable display of claim **13**, wherein the first actuator and the second actuator are concentric.

15. The wearable display of claim **13**, wherein:

actuating the first actuator in a first direction extends the first member for adjusting a vertical position of the wearable display;

actuating the first actuator in a second direction retracts the first member for adjusting the vertical position of the wearable display;

actuating the second actuator in a third direction extends the second member and the third member for loosening the wearable display; and

actuating the second actuator in a fourth direction retracts the second member and the third member for tightening the wearable display.

16. The wearable display of claim **13**, further comprising:

a first loudspeaker pivotably coupled to the second member via a first ball joint; and

a second loudspeaker pivotably coupled to the third member via a second ball joint.

17. The wearable display of claim **13**, further comprising:

a display housing located at the front; and

a face gasket coupled to the display housing, the face gasket including:

a first portion couple to the display housing;

a second portion for engaging with a user; and

an intermediate portion disposed between the first portion and the second portion, wherein the intermediate portion is configured to deform to adjust a distance interposed between the first portion and the second portion.

18. The wearable display of claim **13**, wherein the second member and the third member are configured to overlap at the back.

19. The wearable display of claim **13**, further comprising a rear housing disposed at the back, the rear housing including a third gear and a fourth gear, and wherein:

the first actuator further includes a fifth gear that engages with the third gear for reducing backdrive of the first actuator; and

the second actuator further includes a sixth gear that engages with the fourth gear for reducing backdrive of the second actuator.

20. The wearable display of claim **13**, further comprising a display housing disposed at the front and a rear harness disposed at the back, and wherein:

a first end of the first member couples to the display housing;

a second end of the first member is disposed within the rear harness;

a first end of the second member couples to the display housing;

a second end of the second member is disposed within the rear harness;

a first end of the third member couples to the display housing, and

a second end of the third member is disposed within the rear harness.

* * * * *