US 20210394812A1

(19) United States

(12) Patent Application Publication

(10) Pub. No.: US 2021/0394812 A1

(43) Pub. Date: Dec. 23, 2021

EICHHORN et al.

(54) STEERING HANDLE OF A VEHICLE

(71) Applicant: **Bayerische Motoren Werke Aktiengesellschaft**, Muenchen (DE)

(72) Inventors: **Julian EICHHORN**, Menlo Park, CA (US); **Gunnar FRANZ**, Ottobrunn (DE); **Christian FROEMEL**, Kolbermoor (DE); **Zoltan MAJOR**, Muenchen (DE); **Martin WIESINGER**, Lamerdingen (DE)

(21) Appl. No.: **17/292,150**

(22) PCT Filed: **Oct. 16, 2019**

(86) PCT No.: **PCT/EP2019/078103**

§ 371 (c)(1),
(2) Date: **May 7, 2021**

(30) **Foreign Application Priority Data**

Nov. 9, 2018 (DE) 10 2018 128 135.8

Publication Classification

(51) **Int. Cl.**
B62D 1/14 (2006.01)

(52) **U.S. Cl.**
CPC *B62D 1/14* (2013.01)

(57) **ABSTRACT**

A steering handle of a vehicle includes a support structure, which is mounted for rotation about an axis of rotation and at each end of which an angled gripping element for a hand of a driver is provided such that the gripping element can be rotated relative to the support structure. In at least one defined driving state of the vehicle, the two gripping elements are or have been positioned by way of an actuating device in such a way that portions of the gripping elements that are provided for grasping with the hands of the driver lie on a line, the free ends of the portions facing one another. For example, the gripping elements are L-shaped, and the leg of each gripping element oriented at least approximately horizontally in the neutral position of the steering handle is rotatably fastened, by way of the end portion of the leg closer to the steering handle axis of rotation, to the support structure, which is likewise oriented horizontally in the neutral position of the steering handle, and an at least approximately vertically oriented leg connected to the other end of the horizontal leg is designed as the portion for grasping with a hand of the driver.

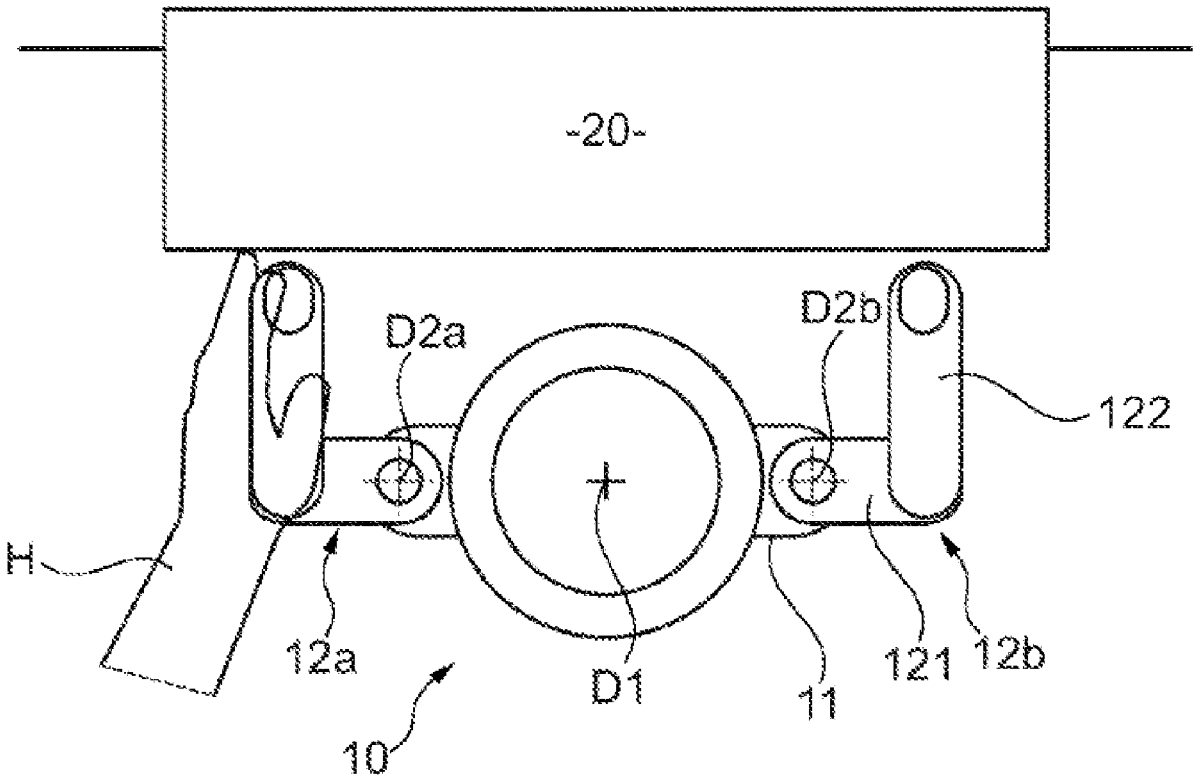

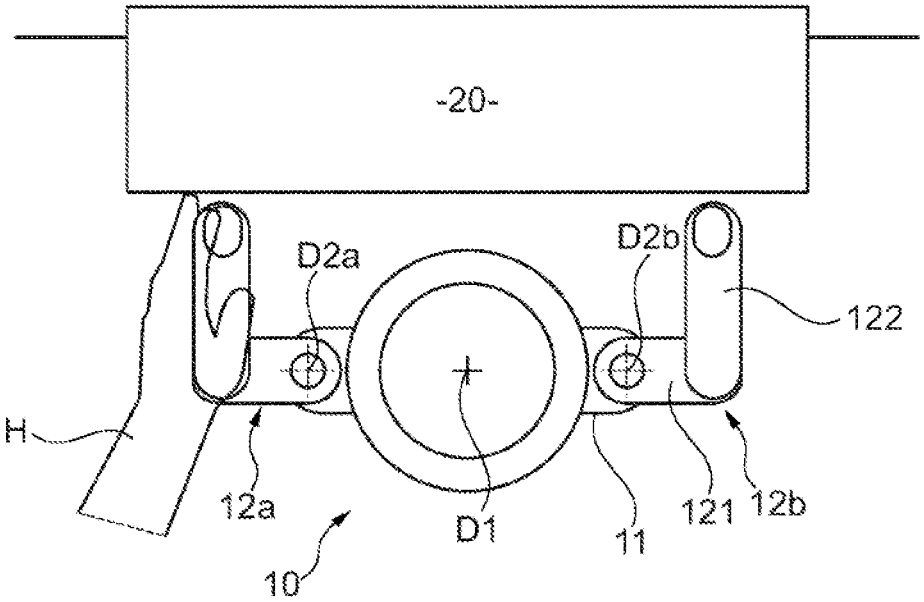
-20-
D2a
D2b
122
H
12a
D1
11
121
12b
10

Fig. 1

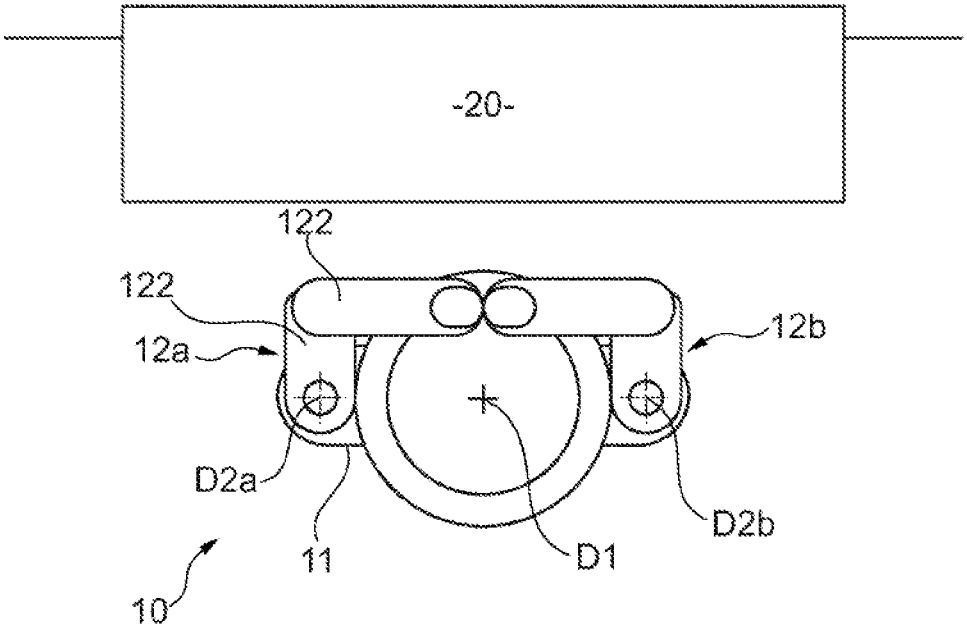
-20-
122
122
12a
12b
D2a
D2b
11
D1
10

Fig. 2

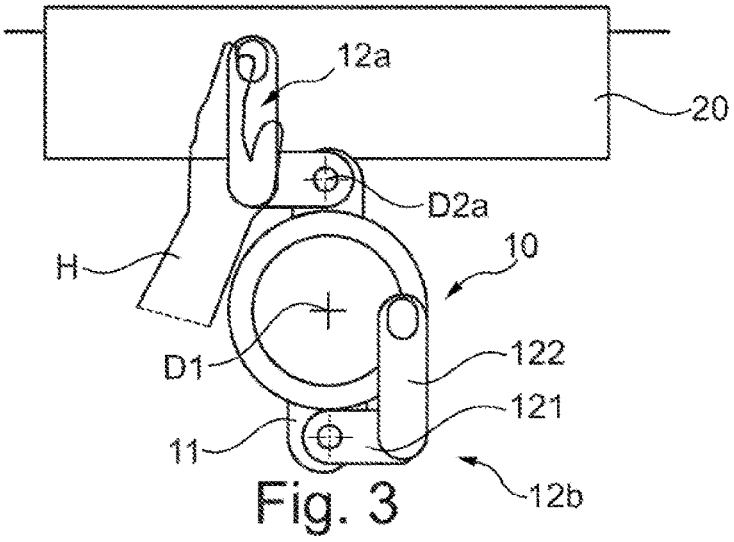

Fig. 3

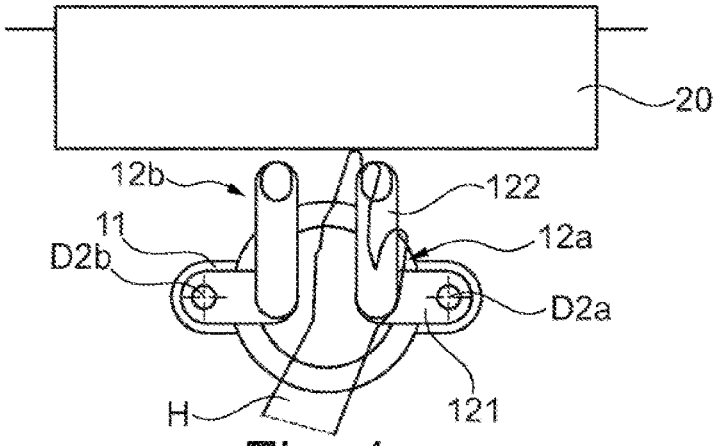

Fig. 4

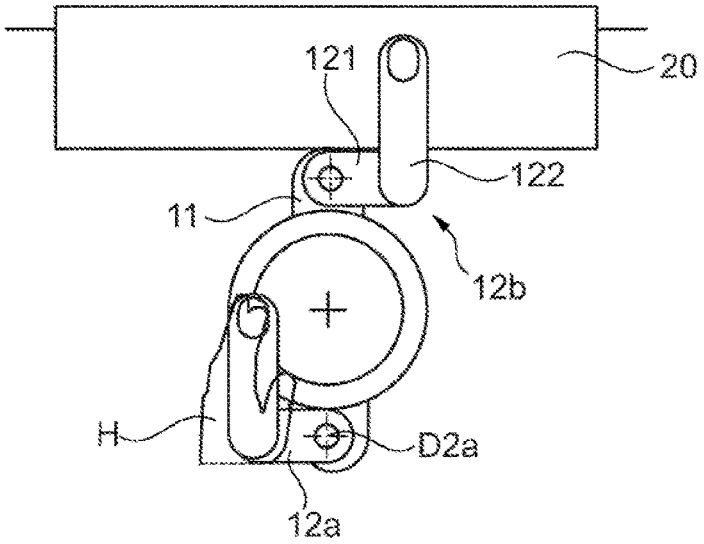

Fig. 5

STEERING HANDLE OF A VEHICLE

BACKGROUND AND SUMMARY OF THE INVENTION

[0001] The invention relates to a steering handle of a vehicle with a supporting structure which is mounted such that it can be rotated about a rotational axis and at the ends of which a grip element, for a hand of a driver, which is formed in a manner which is angled away, is provided. The grip element is formed in a manner which can be rotated with respect to the supporting structure.

[0002] In addition to JP-2004-352124 A, reference is made, in particular, to DE 10 2016 225 452 A1 with respect to the prior art.

[0003] Within the context of the development of at least partially autonomously driving double-track motor vehicles, the development of novel steering handles is also envisaged, with the aid of which a driver can steer the vehicle, that is to say can predefine or set its driving direction, in a non-automated driving mode which is still available. The steering wheels which have been used for this purpose up to now namely require a relatively large amount of installation space which might be used for other purposes at any rate when the vehicle is driving autonomously. In addition to a displacement of steering wheels during autonomous driving, novel steering handles are therefore also being researched which require less installation space at least in an autonomous driving state, in which the steering handle of the vehicle remains substantially in a neutral position which corresponds to driving operation controlled by a driver of driving straight ahead of the vehicle, even when driving around bends.

[0004] For this purpose, a steering handle has already been proposed, it being possible for what is known as the supporting structure here, which lies practically horizontally in the vehicle interior in said neutral position of the steering handle and is therefore called a transverse element in the closest prior art which was mentioned at the outset, to be of a very wide variety of designs. By way of gripping and suitable guiding of at least one grip element which is provided or attached in the end region of the supporting structure, the driver can rotate the supporting structure or steering handle about its rotational axis during non-autonomous driving operation. An electric motor drive apparatus for rotating the grip element has also already been proposed in the prior art, it also being possible, as an alternative, for a suitable mechanism to be provided, for example an endless flexible drive mechanism for rotating a grip element.

[0005] It is intended to be indicated here how further installation space can be gained by way of a steering handle at least in defined operating states.

[0006] This object is achieved by way of the features of the independent patent claim, which is characterized in that the two grip elements are positioned in at least one defined state of the vehicle by way of an actuating apparatus such that sections of the grip elements which are provided for gripping by way of the hands of the driver lie on one line, the free ends of said sections facing one another.

[0007] In one preferred embodiment, at least approximately L-shaped grip elements are provided, the limb of which, which is oriented at least approximately horizontally in the neutral position of the steering handle, is rotatably fastened by way of its end section which is closer to the rotational axis to the supporting structure which is likewise oriented horizontally in the neutral position of the steering handle, and a limb which is adjacent with respect to the other end of said horizontal limb and is oriented at least approximately vertically being configured or provided as a section for gripping by way of a hand of the driver.

[0008] The latter is also shown by the exemplary embodiment which is explained in the following text and is illustrated in the appended figures.

BRIEF DESCRIPTION OF THE DRAWINGS

[0009] FIG. **1** shows a top view of the steering handle according to an embodiment of the invention in the neutral position, that is to say during driving straight ahead of the vehicle, if the latter is being controlled by a driver.

[0010] FIG. **2** shows the steering handle in a driving state, in which the vehicle is driving autonomously, that is to say without the assistance of the, or a, driver,

[0011] FIG. **3** shows the steering handle in a state, in which it is rotated by **90**° in the clockwise direction starting from the state in accordance with FIG. **1**.

[0012] FIG. **4** shows the steering handle in a state, in which it is rotated by **180**° in the clockwise direction starting from the state in accordance with FIG. **1**.

[0013] FIG. **5** shows the steering handle in a state, in which it is rotated by **270**° in the clockwise direction starting from the state in accordance with FIG. **1**.

DETAILED DESCRIPTION OF THE DRAWINGS

[0014] The designation **10** denotes a steering handle of a vehicle, for example of a passenger motor vehicle, behind which steering handle, as viewed from the driver, a dashboard with a display unit **20** (for example, for the driving speed and other information to be conveyed to the driver) is situated. A hand of the driver, namely his/her left hand, is denoted by way of the letter H.

[0015] The steering handle **10** consists of a supporting structure **11** which is mounted in the vehicle such that it can be rotated about a rotational axis D**1** which runs perpendicularly with respect to the plane of the drawing in the illustrations of the figures. If the vehicle is driving straight ahead, the bar-shaped supporting structure **11** is horizontal, that is to say it forms, as it were, a horizontal transverse element. In each case one grip element **12***a*, **12***b* is arranged on the two end sections of the supporting structure **11**, which grip element **12***a*, **12***b* for its part can be rotated with respect to the supporting structure **11**, to be precise about a rotational axis D**2***a*, D**2***b* which runs at least approximately parallel to the rotational axis D**1**.

[0016] Each grip element **12***a*, **12***b* is angled away and/or is formed at least approximately in an L-shaped manner, and therefore consists of a first limb **121** and a second limb **122** which is substantially perpendicular with respect to the former. The latter is provided and configured to be gripped by the driver by way of his/her hand H, whereas the first limb **121** is articulated rotatably on the supporting structure **11** by way of its end section which faces away from the second limb **122**. At least in the neutral position of the steering handle in accordance with FIG. **1**, the first limbs **121** of the two grip elements **12***a*, **12***b* are oriented horizontally, with the result that the second limbs **122** lie in each case in a vertical plane. Therefore, a vertical plane is spoken of here because, as viewed in the vehicle, the rotational axis D**1** is not oriented exactly, but rather merely approximately hori-

zontally, and actually runs in a slightly inclined manner downward toward the front, as viewed from the driver.

[0017] In the neutral position of the steering handle **10**, that is to say when the vehicle is being controlled by the driver and is driving straight ahead, the supporting structure **11** is oriented horizontally, and the grip element **12***a* is situated on the left-hand side and the grip element **12***b* is situated on the right-hand side, the second limbs **122** lying in each case on the outside, that is to say being spaced apart further from the rotational axis D**1** than, for example, the central region of the respective associated first limb **121**. The second limbs **122** are preferably oriented upward, starting from the first limb **121**, with the result that the driver can grip the grip element **12***a* by way of his/her left hand H and can grip the grip element **12***b* by way of his/her right hand (not shown). In this state, the display unit **20** can advantageously be viewed by the driver as satisfactorily as possible, since it is not concealed by the steering handle **10**.

[0018] FIG. **2** shows the steering handle **10** in a special (or certain defined) state or driving state, namely in that driving state of autonomous driving, in which the vehicle moves in a highly automated or fully automated manner without the assistance of the driver. In this driving state, as much free space as possible is to be provided for the driver who is still seated on his/her seat and therefore in front of the steering handle **10**, with the result that he/she can read a newspaper, for example, or can manage emails, for example, by means of a tablet or the like with the aid of the display unit. In order, in a driving state of this type, to provide a steering handle **10** which is as compact as possible, that is to say takes up as little installation space as possible, the two grip elements **12***a*, **12***b* are then positioned, in a manner which is triggered by way of a suitable actuating apparatus (not shown), in such a way that the sections of the grip elements **12***a*, **12***b* which are provided for being gripped by way of the hands of the driver, namely the second limbs **122**, lie on a common line, the free ends of said sections or second limbs **122** facing one another. For this purpose, starting from the state in accordance with FIG. **1**, the left-side grip element **12***a* is rotated by 90° in the clockwise direction, and the right-side grip element **12***b* is rotated by 90° counter to the clockwise direction. It goes without saying that a slight angular arrangement, that is to say if the two grip elements **12***a*, **12***b* do not enclose an angle of 180° in said certain driving state, but rather an angle of, for example, 165° or 195°, is likewise to fall within the defined state as "lying on a common line".

[0019] FIG. **3** shows the steering handle **10** again in a driving state, in which the driver is controlling the vehicle, for which reason the left hand H of the driver which is still holding the left-hand grip element **12***a* is also shown here again. Starting from the state in accordance with FIG. **1**, the driver has rotated the steering handle **10** by 90° in the clockwise direction for the transition to the state in accordance with FIG. **3**, the supporting structure **11** having been rotated by 90° in the clockwise direction, and the two grip elements **12***a*, **12***b* having been moved merely translationally, as viewed in a coordinate system which is fixed on the vehicle, but not having been rotated. Here, in contrast, the grip elements **12***a*, **12***b* have been rotated with respect to the supporting structure **11**, to be precise in each case by 90° counter to the clockwise direction.

[0020] FIG. **4** likewise shows the steering handle **10** in a driving state, in which the driver is controlling the vehicle, for which reason the left hand H of the driver which is still holding the left-hand grip element **12***a* is shown here. Starting from the state in accordance with FIG. **1**, the driver has rotated the steering handle **10** by 180° in the clockwise direction for the transition to the state in accordance with FIG. **4**, the supporting structure **11** having been rotated by 180° in the clockwise direction, and the two grip elements **12***a*, **12***b* having been moved merely translationally, as viewed in a coordinate system which is fixed on the vehicle, but not having been rotated. In contrast, the grip elements **12***a*, **12***b* have been rotated with respect to the supporting structure **11**, to be precise in each case by 180° counter to the clockwise direction. As can be seen, although the driver has to move his/her left hand H to the right beyond the rotational axis D**1** for this state, the distance by which he/she has to do this is relatively small on account of the angled-away design of the grip element **12***a;* on account of the first limb **121**, the second limb **122** which is to be gripped comes to meet him/her, as it were, in the case of this rotation of the steering handle **10** which has been described in this way.

[0021] FIG. **5** shows the steering handle **10** still in a driving state, in which the driver is controlling the vehicle, to be precise still with his/her left hand H which is still holding the grip element **12***a*. Starting from the state in accordance with FIG. **1**, the driver has then rotated the steering handle **10** by 270° in the clockwise direction for the transition to the state in accordance with FIG. **5**, the supporting structure **11** having been rotated by 270° in the clockwise direction, and the two grip elements **12***a*, **12***b* still being moved merely translationally, as viewed in a coordinate system which is fixed on the vehicle, but not having been rotated. In contrast, the grip elements **12***a*, **12***b* have been rotated with respect to the supporting structure **11**, to be precise in each case by 270° counter to the clockwise direction, the grip element **12***a* then again lying on the left-hand side of the rotational axis D**1** or, more precisely, of a vertical plane which contains the rotational axis D**1**.

[0022] As is apparent from the figures, there is merely a minimum overlap of the display unit **20** with a steering handle **10** of this type. The steering handle **10** never protrudes at all into the view of or through the windshield which lies above the display unit **20**. Otherwise, a collision also does not occur, in the case of the steering operation which is shown in FIGS. **1**, **3**, **4** and **5**, with the knees of the driver who is seated in front of the steering handle **10**, which knees are not shown in the figures.

[0023] As is apparent from the figures, furthermore, single-handed steering without gripping is possible over the entire possible rotational range of the steering handle **10**, which rotational range can lie, for example, in the order of magnitude of plus/minus 360° (that is to say in or counter to the clockwise direction). In addition, in particular, a steering handle **10** of this type can be folded together to be sufficiently small, that is to say can be changed into a design in accordance with FIG. **2** with a minimum installation space requirement. It is to be noted expressly here that a certain state of the vehicle, in which the steering handle **10** is folded together into the design described in the present case with a minimized installation space, is not restricted to the state of autonomous movement. It goes without saying that the steering handle **10** can also be moved into a design of this type in other states, for example in the case of parking with a short or relatively long duration, in which the driver is not steering the vehicle. It goes without saying that the steering handle **10** can additionally be moved in its entirety in this

design, that is to say, for example, can be moved toward the dashboard. This can take place by electric motor, just as, for example, the grip elements **12***a*, **12***b* can likewise be rotated by electric motor with respect to the supporting structure **11**, the grip elements **12***a*, **12***b* preferably being moved as described regardless of whether the driver is gripping them or not. In addition, for the case where the driver rotates the steering handle **10** counter to the clockwise direction, it goes without saying that the grip elements **12***a*, **12***b* are rotated in the clockwise direction with respect to the supporting structure **11**.

1.-**2**. (canceled)

3. A steering handle of a vehicle, comprising:

a supporting structure which is mounted for rotation about an axis of rotation;

two angled gripping elements, one each being provided at respective ends of the supporting structure for a hand of a driver such that the gripping element is rotatable relative to the supporting structure, wherein

in at least one defined driving state of the vehicle, the two gripping elements are or have been positioned by way of an actuating device such that portions of the gripping elements that are provided for grasping with the hands of the driver lie on a common line, free ends of the portions facing one another.

4. The steering handle according to claim **3**, wherein

the gripping elements are L-shaped, and

a leg of each gripping element oriented at least approximately horizontally in a neutral position of the steering handle is rotatably fastened, by way of an end portion of the leg closer to the steering handle axis of rotation, to the supporting structure,

the supporting structure is also oriented horizontally in the neutral position of the steering handle, and

an at least approximately vertically oriented leg of each gripping element is connected to the other end of the horizontal leg and is configured as the portion for grasping with a hand of the driver.

* * * * *