US 20210353226A1

(19) United States
(12) Patent Application Publication
Hiemstra et al.
(10) Pub. No.: US 2021/0353226 A1
(43) Pub. Date: Nov. 18, 2021

(54) **WEARABLE ELECTRONIC DEVICE WITH GLASS SHELL**

(71) Applicant: **Apple Inc.**, Cupertino, CA (US)

(72) Inventors: **Daniel J. Hiemstra**, San Jose, CA (US); **Erik G. de Jong**, San Francisco, CA (US); **Sameer Pandya**, Sunnyvale, CA (US)

(21) Appl. No.: **17/315,141**

(22) Filed: **May 7, 2021**

Related U.S. Application Data

(60) Provisional application No. 63/023,961, filed on May 13, 2020.

Publication Classification

(51) **Int. Cl.**

A61B 5/00	(2006.01)
G06F 1/16	(2006.01)
G06F 1/18	(2006.01)
A61B 5/256	(2006.01)
A61B 5/282	(2006.01)
A61B 5/339	(2006.01)
A61B 5/024	(2006.01)
A61B 5/1455	(2006.01)
G06F 3/044	(2006.01)
G04G 17/08	(2006.01)

(52) **U.S. Cl.**

CPC ***A61B 5/681*** (2013.01); ***G06F 1/163*** (2013.01); ***G06F 1/181*** (2013.01); ***A61B 5/256*** (2021.01); ***A61B 5/282*** (2021.01); ***G04G 17/08*** (2013.01); ***A61B 5/02427*** (2013.01); ***A61B 5/14552*** (2013.01); ***A61B 5/7435*** (2013.01); ***G06F 3/044*** (2013.01); ***A61B 5/339*** (2021.01)

(57) **ABSTRACT**

A wearable electronic device may include a display and a housing. The housing may include a chassis defining a first portion of a rear exterior surface of the wearable electronic device, a first portion of a side exterior surface of the wearable electronic device, and an internal wall. The housing may also include a glass shell defining a front wall positioned over the display and defining a front exterior surface of the wearable electronic device and a side wall extending from the front wall and overlapping the internal wall, the side wall defining a second portion of the side exterior surface of the wearable electronic device. The wearable electronic device may also include a touch sensing system within the housing and configured to detect a touch input applied to the front exterior surface of the wearable electronic device.

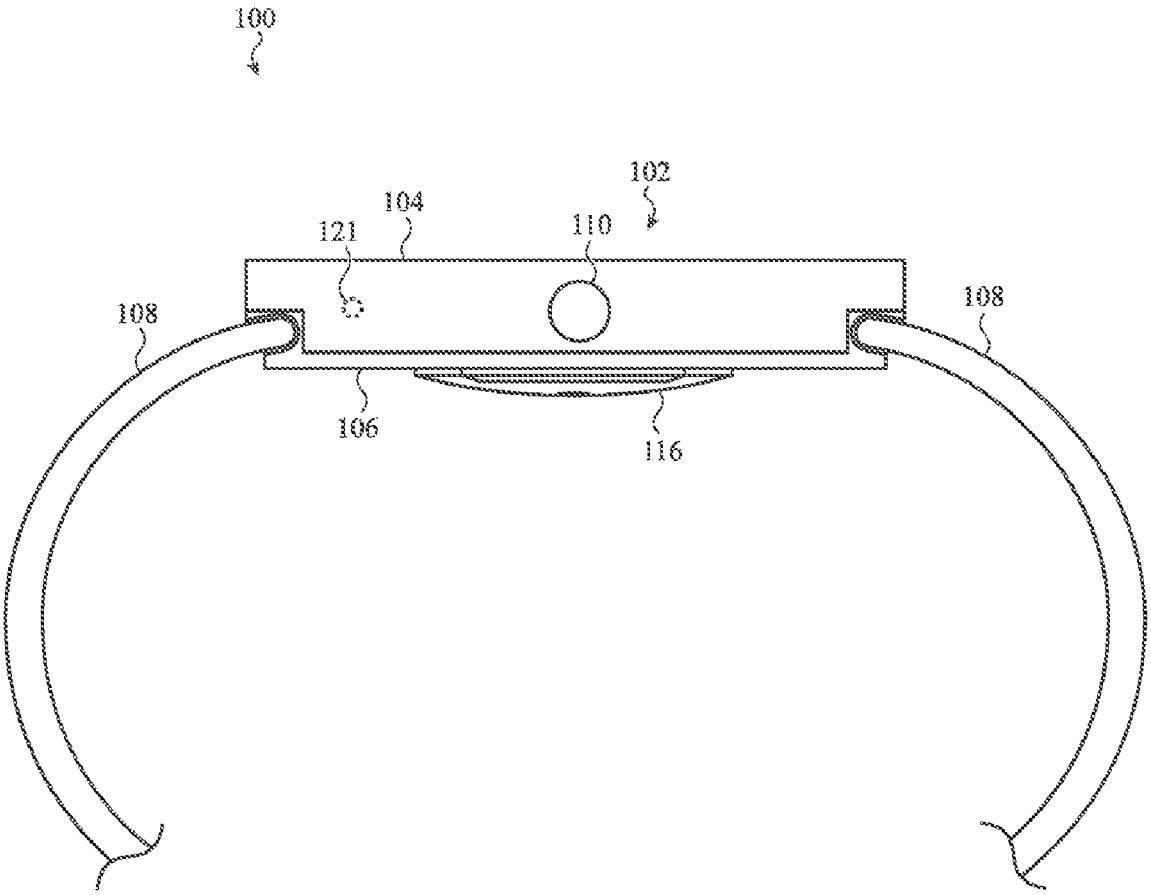

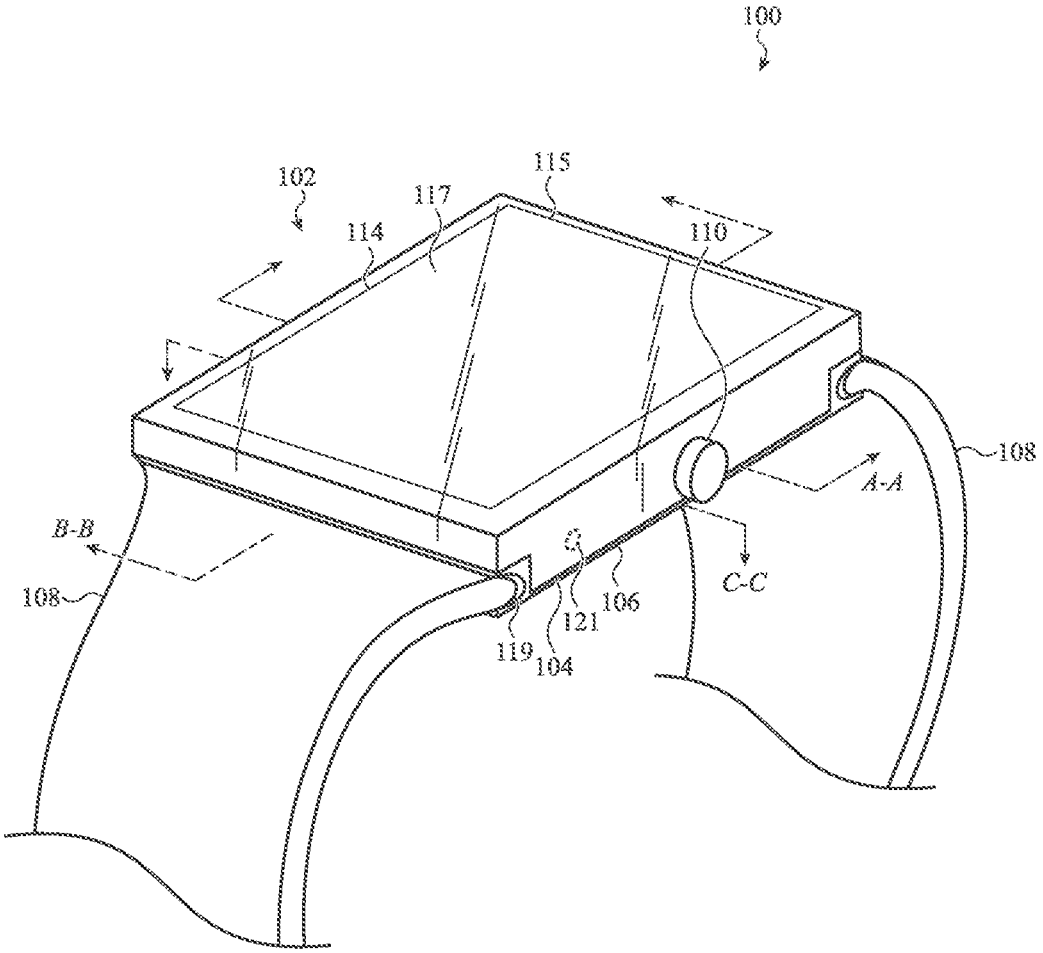

FIG. 1A

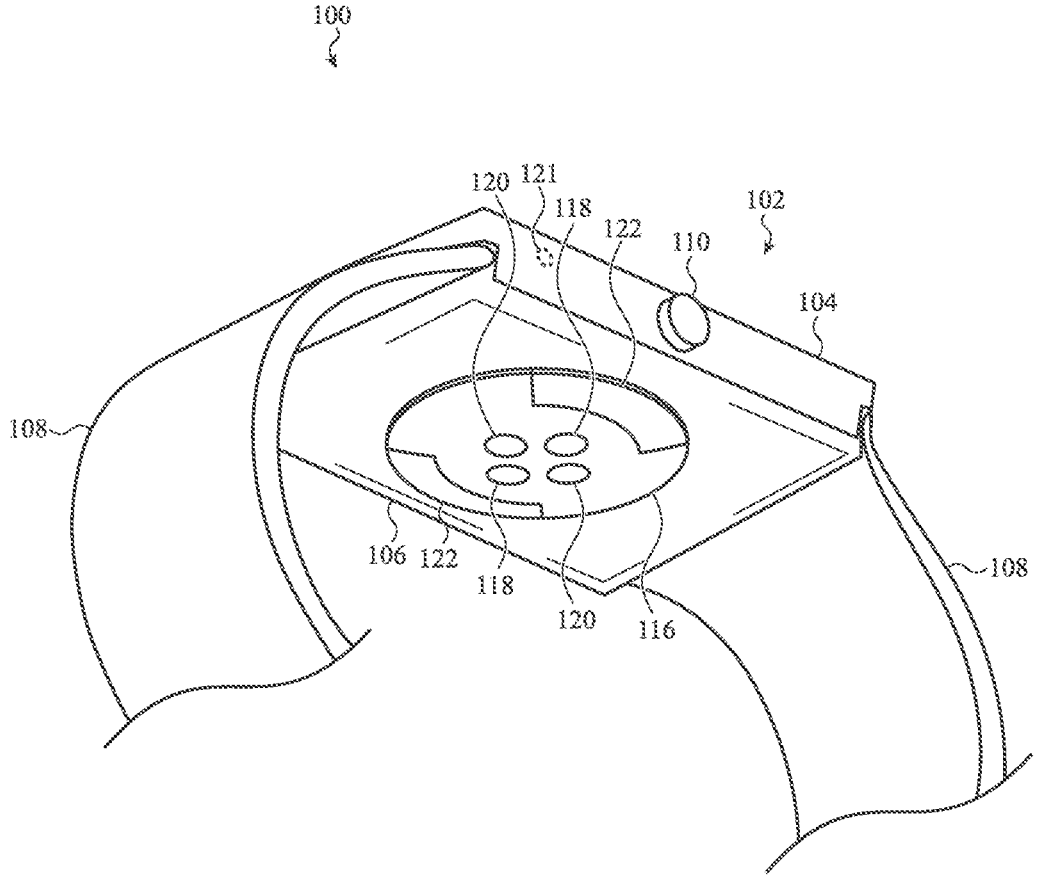

FIG. 1B

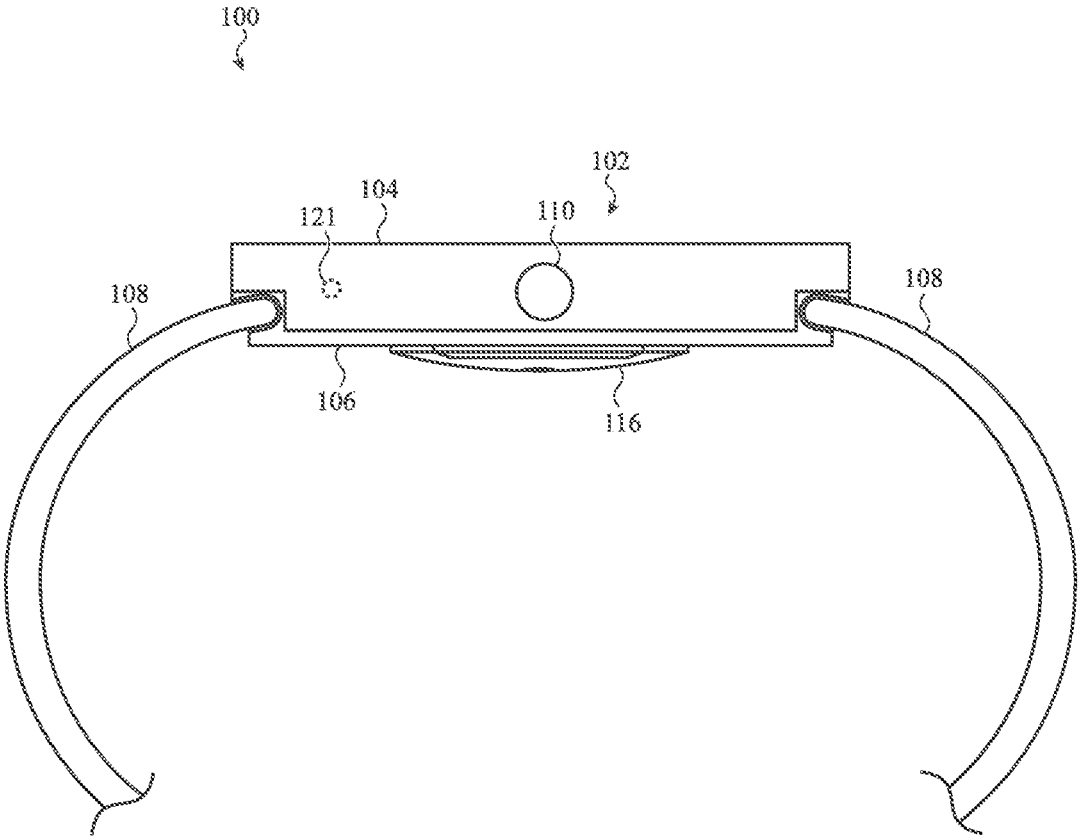

FIG. 1C

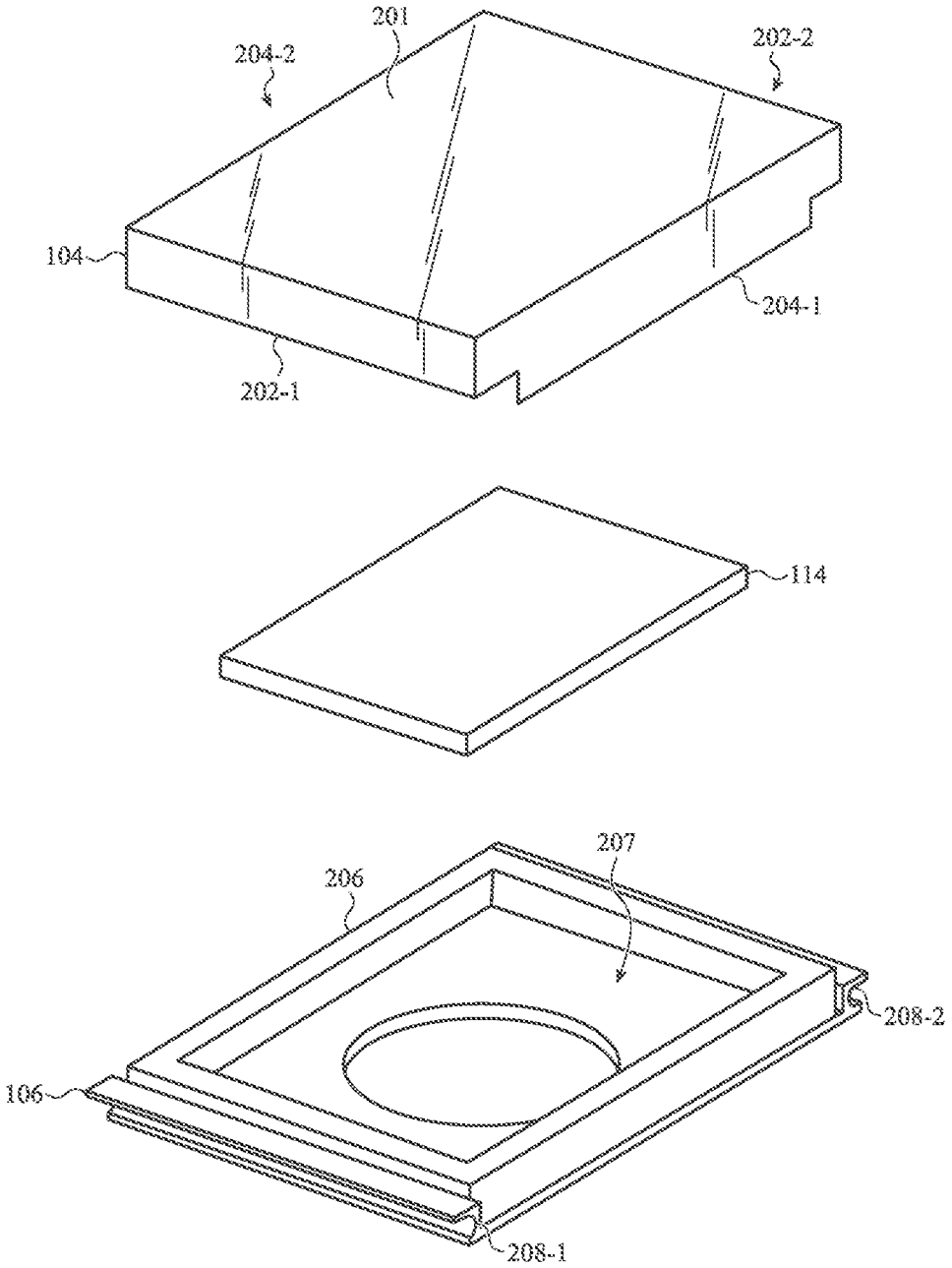

FIG. 2

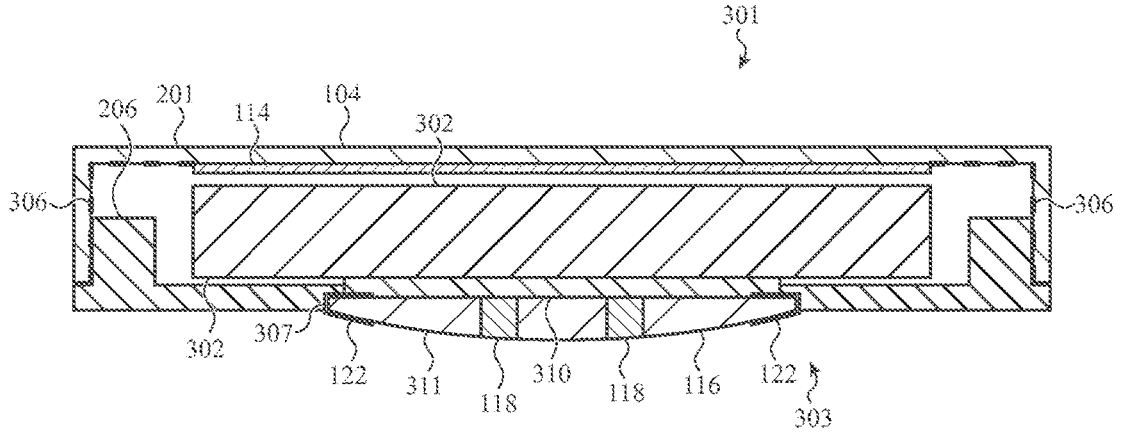
301
206
201
114
104
302
306
306
302
307
122
311
118
310
118
116
122
303

FIG. 3A

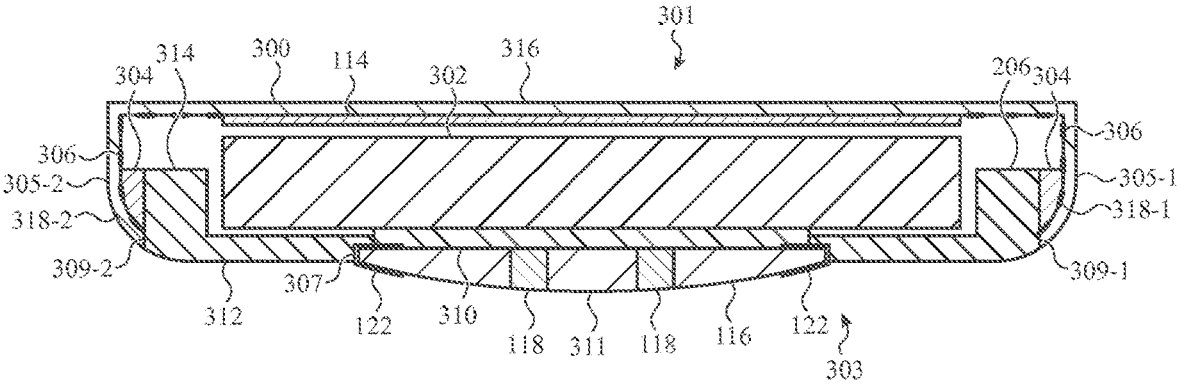
301
304
314
300
114
302
316
206
304
306
306
305-2
305-1
318-2
318-1
309-2
309-1
307
312
122
310
118
311
118
116
122
303

FIG. 3B

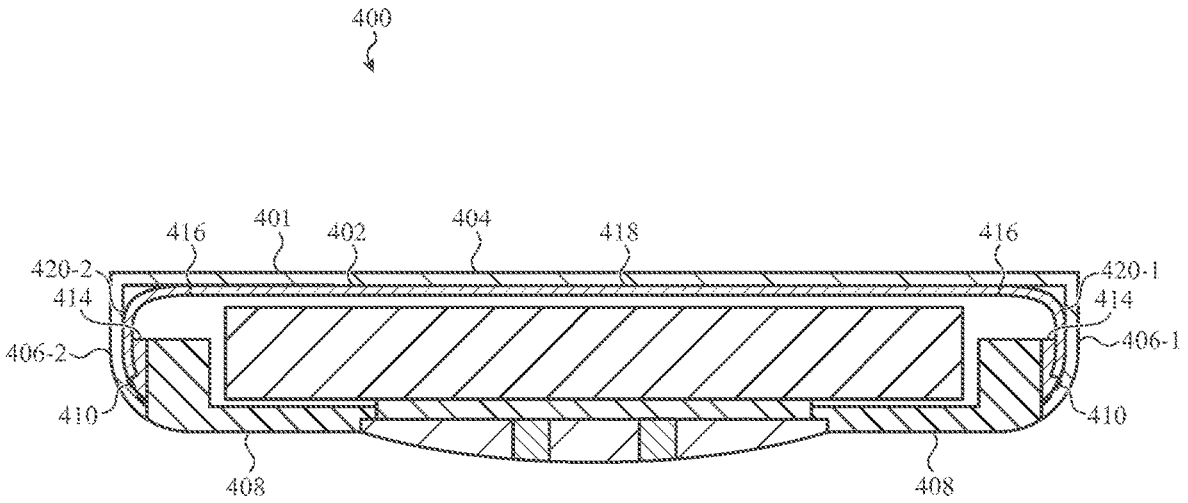
400
416
401
402
404
418
416
420-2
420-1
414
414
406-2
406-1
410
410
408
408

FIG. 4A

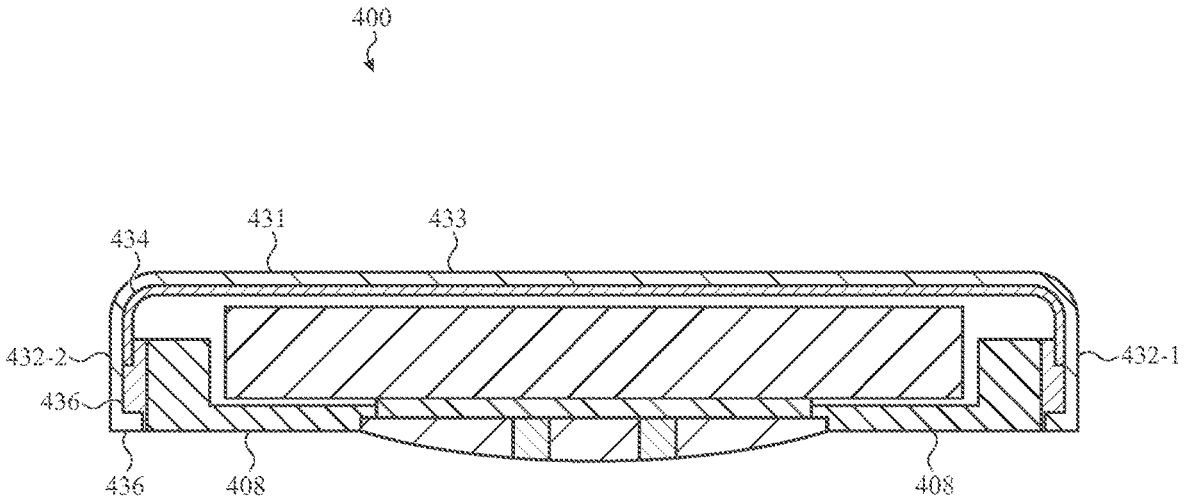
400
434
431
433
432-2
432-1
436
436
408
408

FIG. 4B

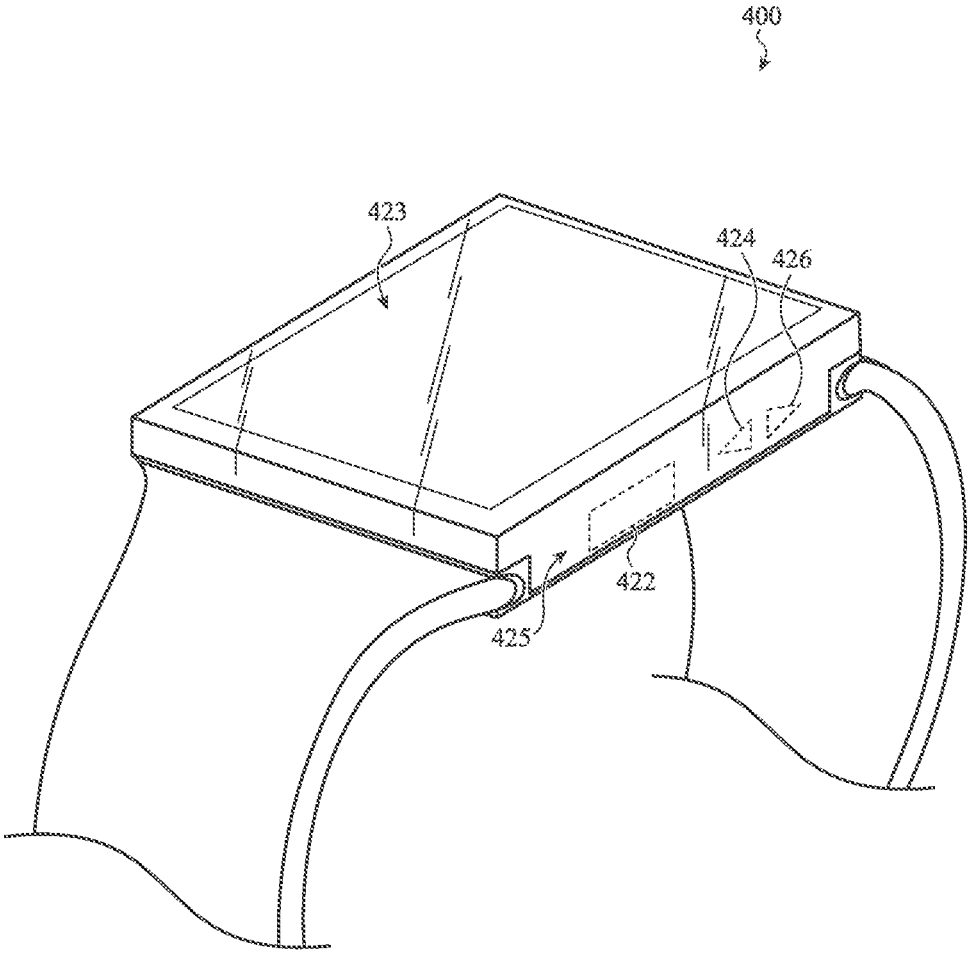

FIG. 4C

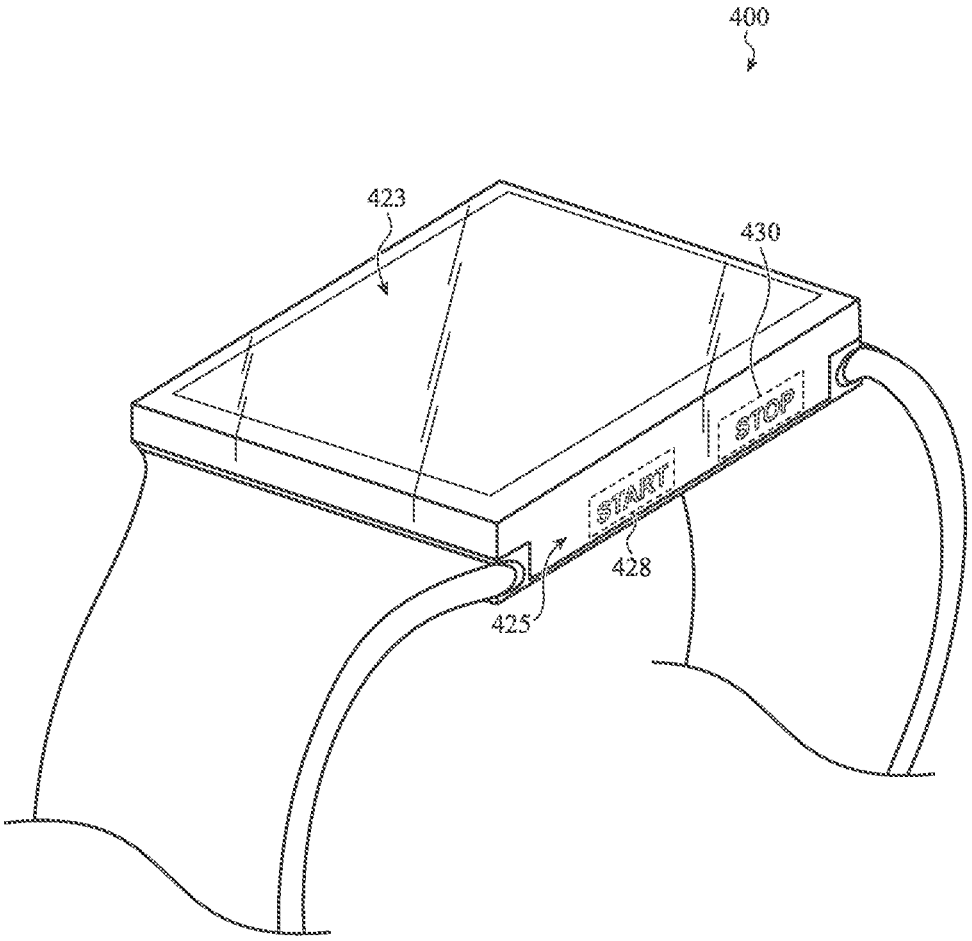

FIG. 4D

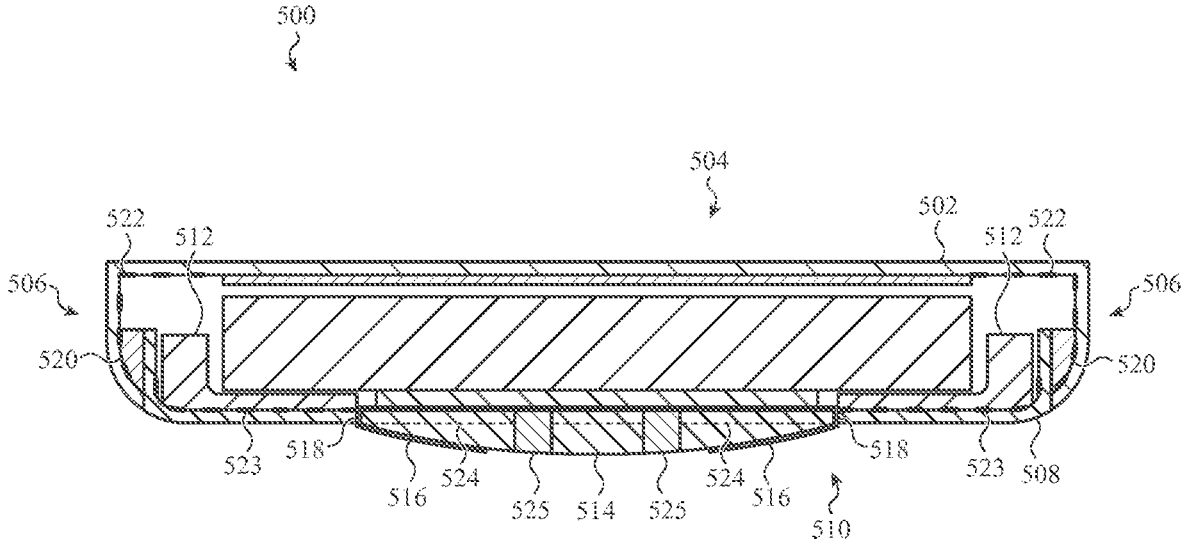
500
504
502
522
512
512
522
506
506
520
520
523
518
516
524
525
514
525
524
516
518
523
508
510

FIG. 5A

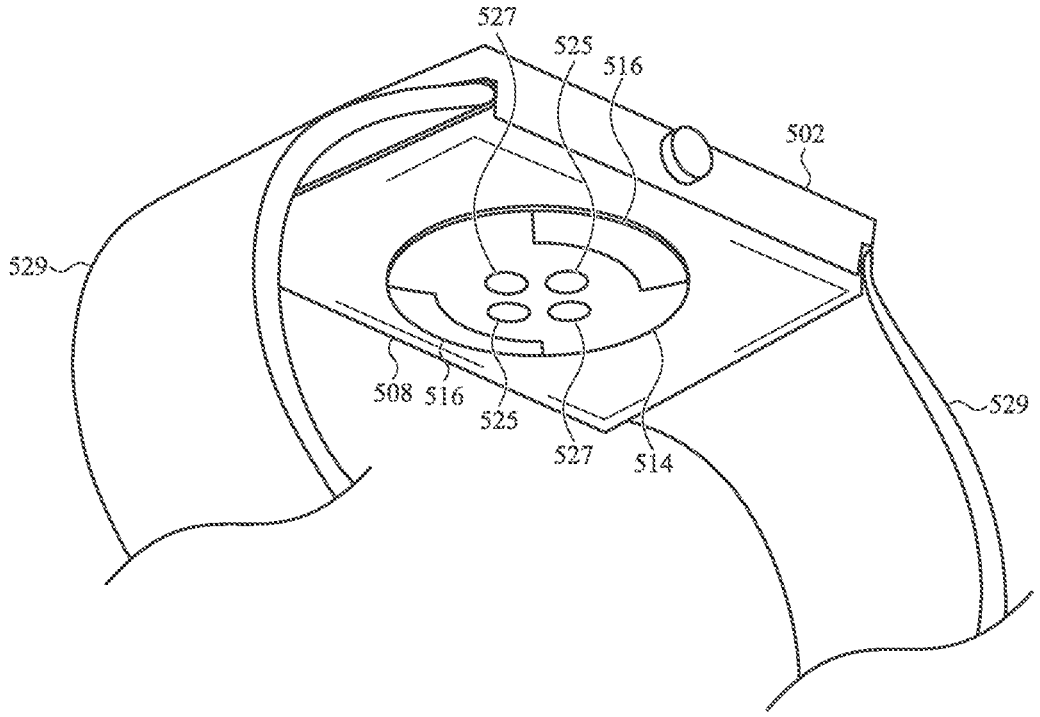

FIG. 5B

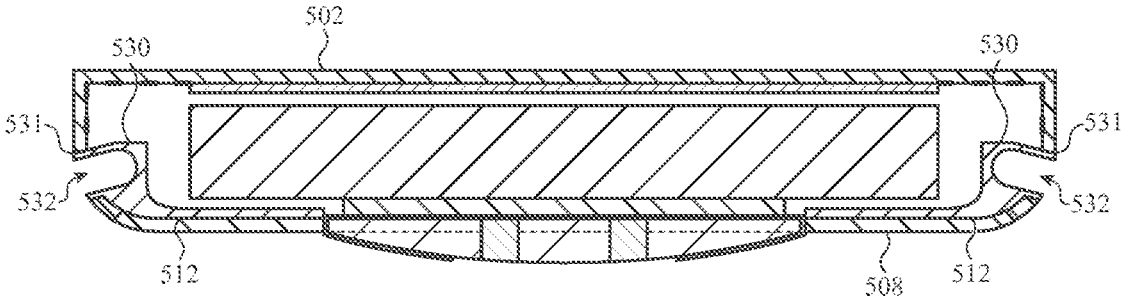

FIG. 5C

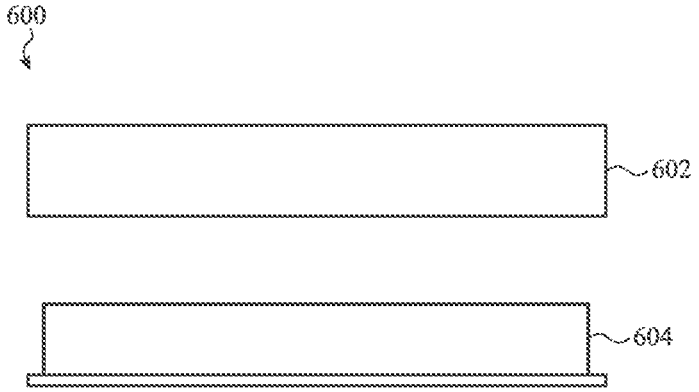

FIG. 6A

FIG. 6B

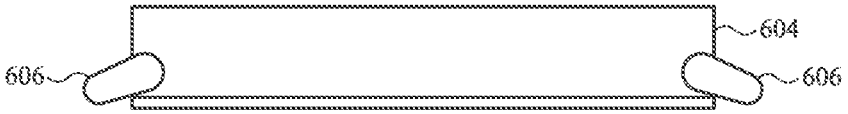

FIG. 6C

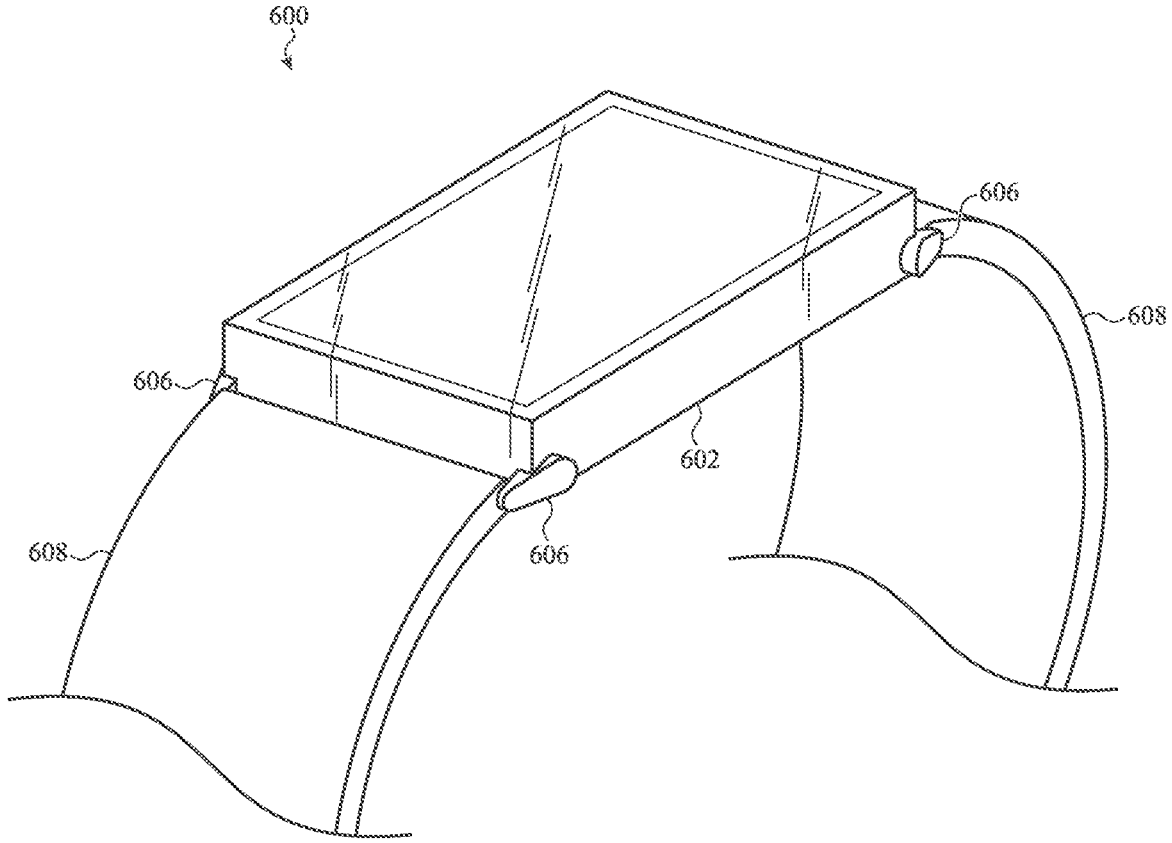

FIG. 6D

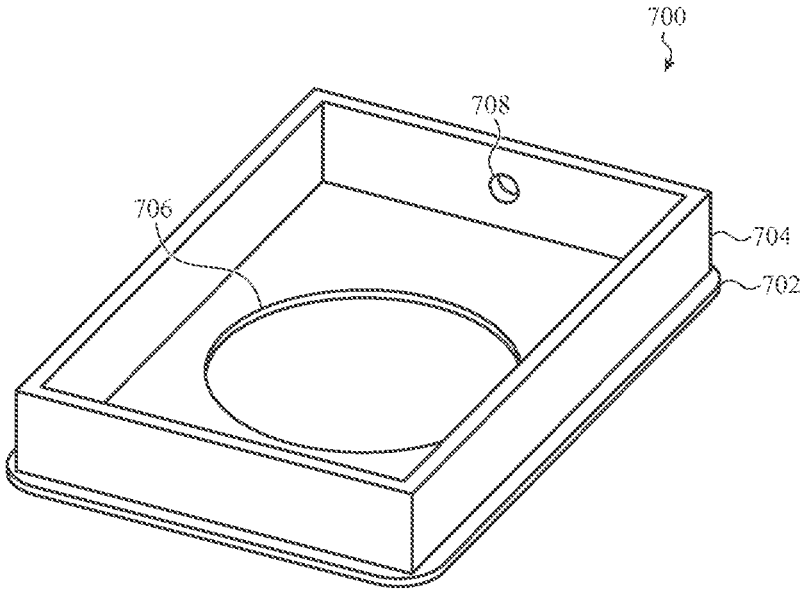

FIG. 7A

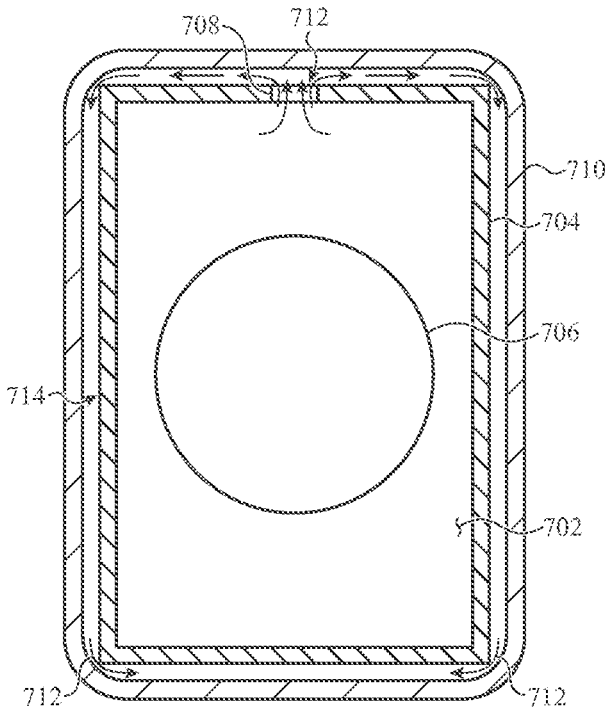

FIG. 7B

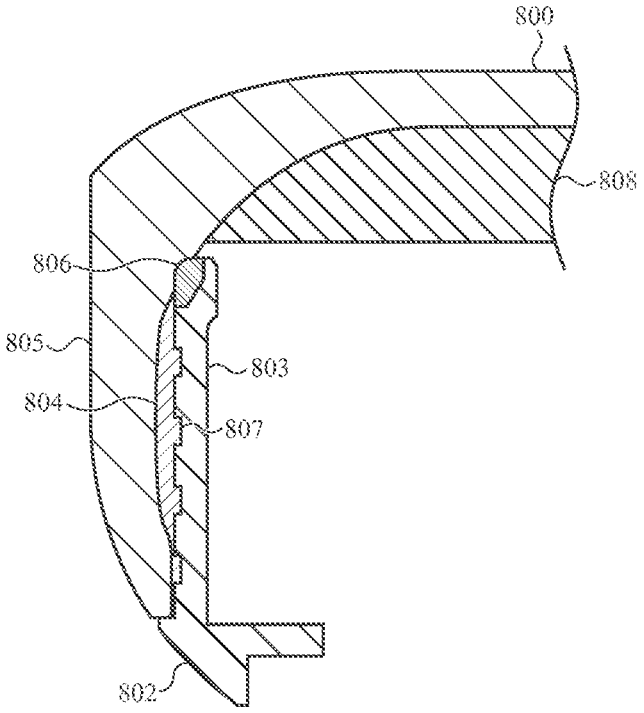

FIG. 8A

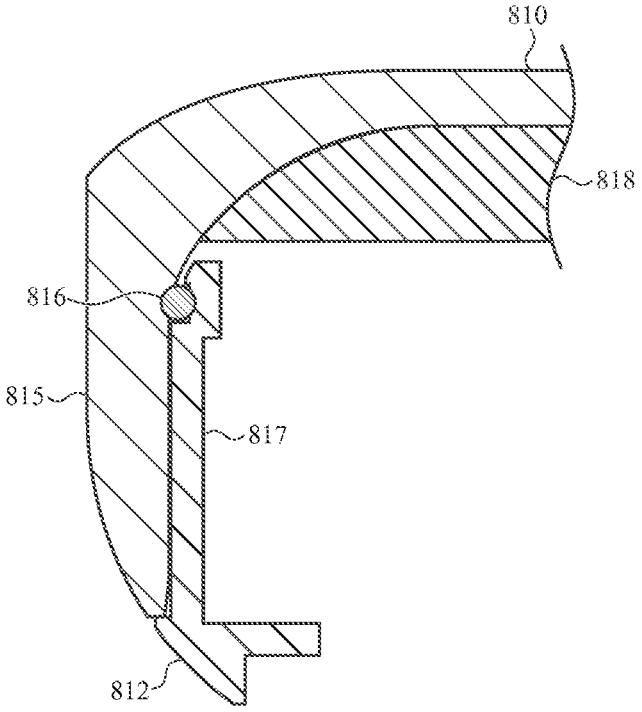

FIG. 8B

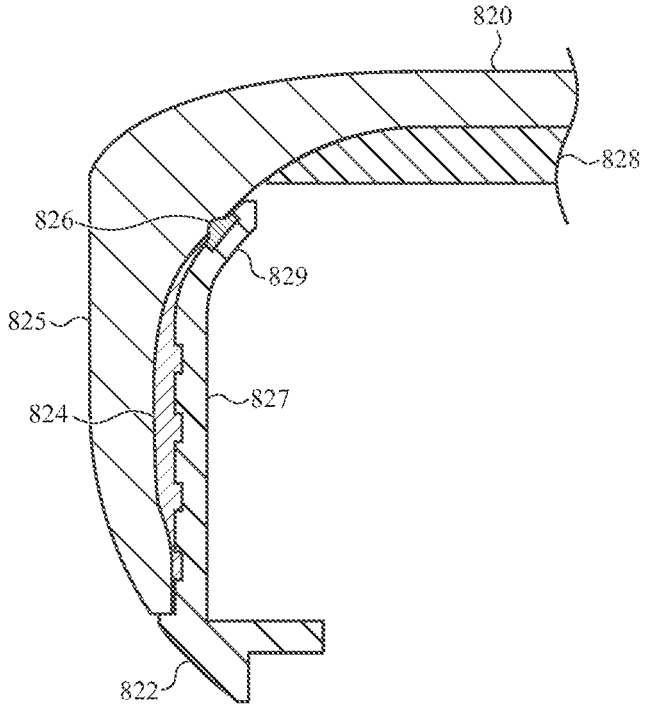

FIG. 8C

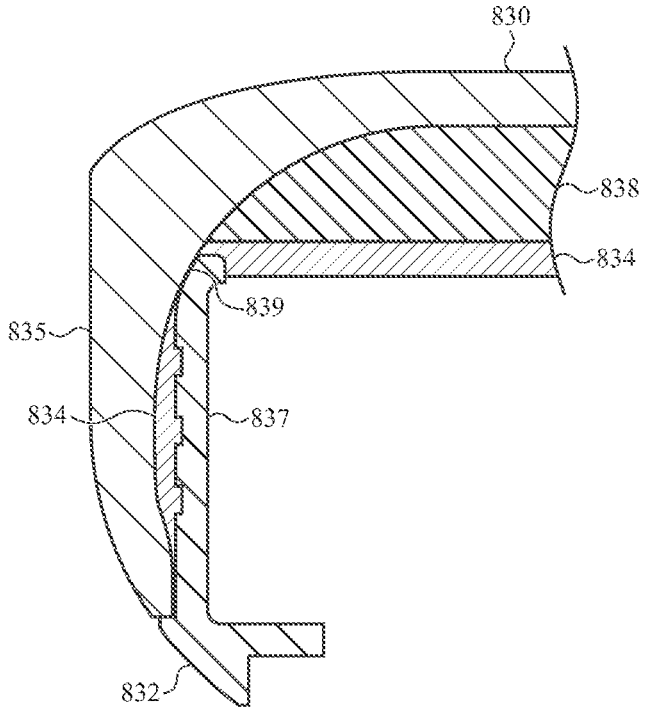

FIG. 8D

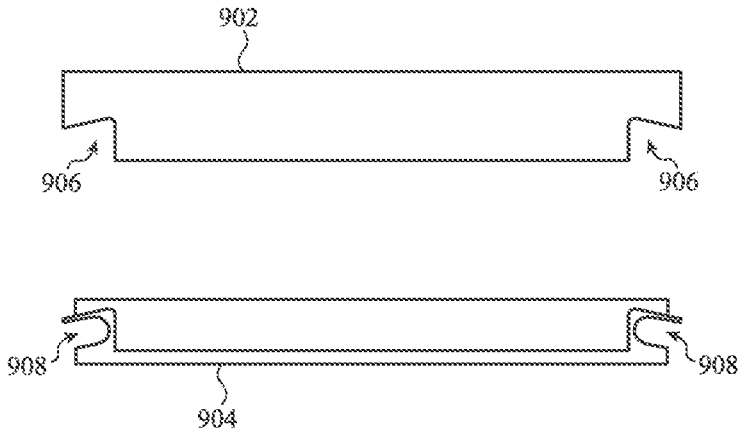

FIG. 9A

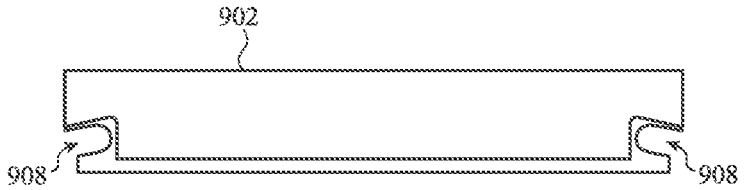

FIG. 9B

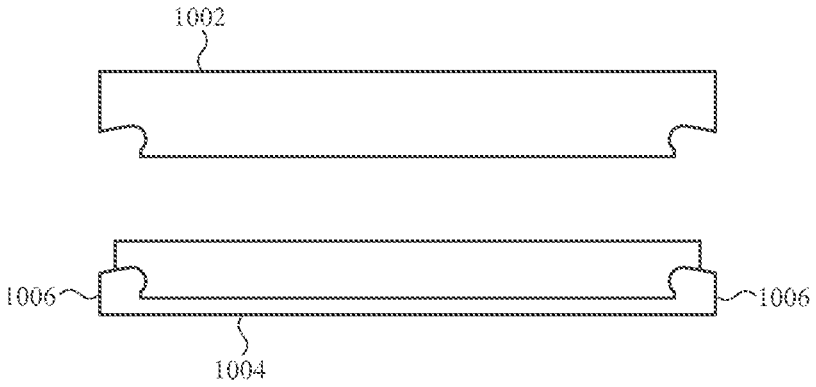

FIG. 10A

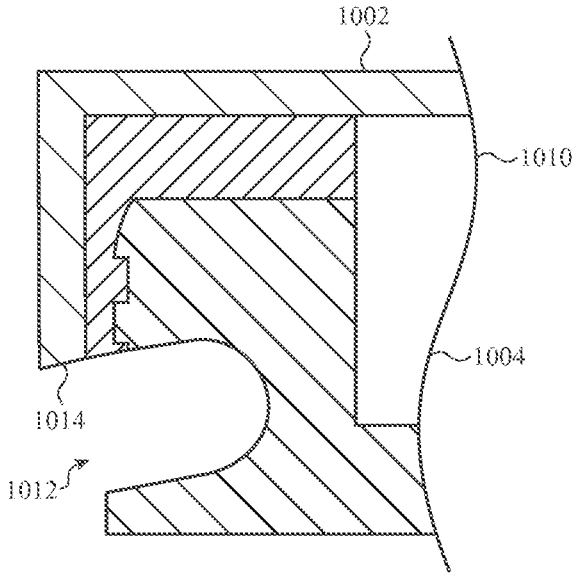

FIG. 10B

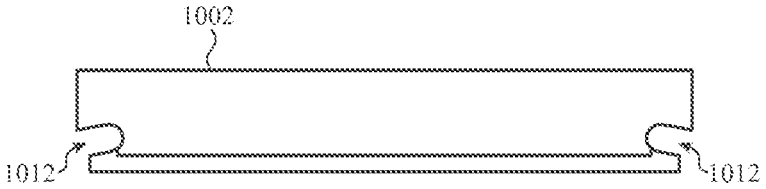

FIG. 10C

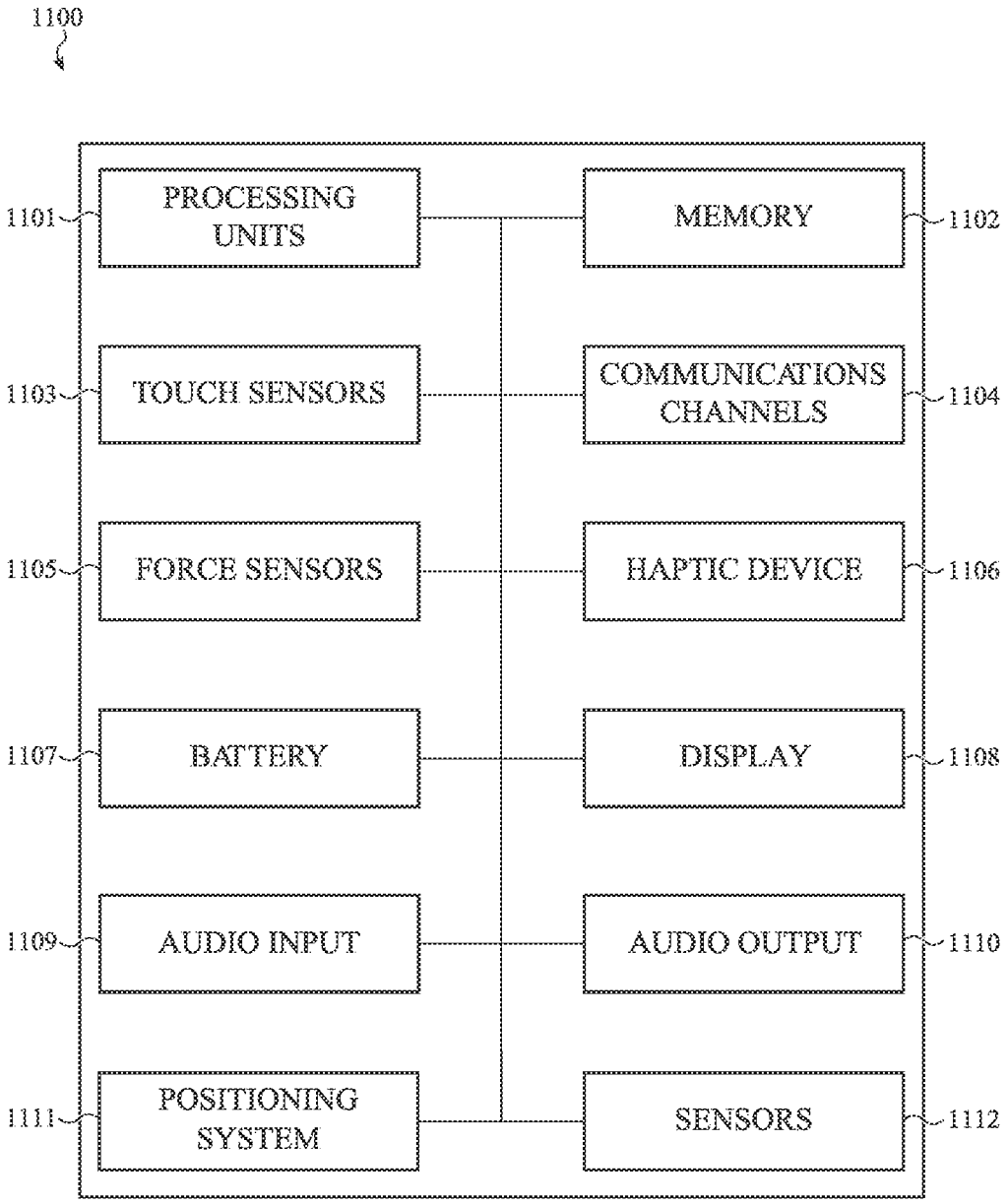
1100
1101
PROCESSING UNITS
MEMORY
1102
1103
TOUCH SENSORS
COMMUNICATIONS CHANNELS
1104
1105
FORCE SENSORS
HAPTIC DEVICE
1106
1107
BATTERY
DISPLAY
1108
1109
AUDIO INPUT
AUDIO OUTPUT
1110
1111
POSITIONING SYSTEM
SENSORS
1112

FIG. 11

WEARABLE ELECTRONIC DEVICE WITH GLASS SHELL

CROSS-REFERENCE TO RELATED APPLICATION(S)

[0001] This application is a nonprovisional patent application of and claims the benefit of U.S. Provisional Patent Application No. 63/023,961, filed May 13, 2020 and titled "Wearable Electronic Device with Glass Shell," the disclosure of which is hereby incorporated herein by reference in its entirety.

FIELD

[0002] The subject matter of this disclosure relates generally to electronic devices and, more particularly, to housing structures for handheld electronic devices.

BACKGROUND

[0003] Modern consumer electronic devices take many shapes and forms, and have numerous uses and functions. Devices such as mobile phones, tablet computers, and watches, for example, may include touch-sensitive displays, speakers, microphones, batteries, as well as sophisticated processors and other electronics. These and other subsystems may be integrated into compact, handheld and/or wearable products that provide myriad functions while being reliable and capable of withstanding daily use.

SUMMARY

[0004] A wearable electronic device may include a display, a housing that includes a chassis defining a first portion of a rear exterior surface of the wearable electronic device and a first portion of a side exterior surface of the wearable electronic device, a glass shell defining a front wall positioned over the display and defining a front exterior surface of the wearable electronic device, and a side wall extending from the front wall and defining a second portion of the side exterior surface of the wearable electronic device. The wearable electronic device may further include a touch sensing system within the housing and configured to detect a touch input applied to the front exterior surface of the wearable electronic device.

[0005] The chassis may further define an internal wall, a portion of the side wall may overlap the internal wall and define a concave interior surface, and the wearable electronic device may further include an adhesive bonding the concave interior surface to the internal wall. The adhesive may define an undercut region, and the concave interior surface of the glass shell may mechanically interlock with the undercut region of the adhesive to secure the glass shell to the chassis. The glass shell may be secured to the chassis at least in part via a chemical bond between the concave interior surface and the adhesive. The second portion of the side exterior surface of the wearable electronic device may extend more than half of a distance from the front exterior surface of the wearable electronic device to the rear exterior surface of the wearable electronic device.

[0006] The wearable electronic device may further include a compliant member within the housing and in contact with the internal wall and the side wall, the compliant member defining a seal between the internal wall and the side wall.

[0007] The front wall may further define a front interior surface of the wearable electronic device, the wearable electronic device may further include an opaque mask material on a portion of the concave interior surface and on a portion of the front interior surface, and the opaque mask material may define a border around an active area of the display. The display may define a first portion configured to display first graphical outputs through the front wall and a second portion configured to display second graphical outputs through the side wall.

[0008] A watch may include a display, a capacitive touch-sensing system, and a housing surrounding the display and the capacitive touch-sensing system. The housing may include a glass shell defining a front wall defining a front surface of the watch, a first pair of side walls having a first length and defining a first pair of side surfaces of the watch, and a second pair of side walls having a second length greater than the first length and defining a second pair of side surfaces of the watch. The housing may also include a chassis defining at least a portion of a rear surface of the watch and a watch band engagement feature. The watch may include a watch band coupled to the watch band engagement feature.

[0009] The chassis may be formed from metal and may define a rear wall defining the portion of the rear surface of the watch and a hole extending through the rear wall. The watch may further include a sensor cover positioned at least partially in the hole and defining an additional portion of the rear surface of the watch and a sensor system configured to detect a biological parameter of a user through the sensor cover. The display may be configured to display graphical outputs visible through the front wall and through at least one side wall of the second pair of side walls.

[0010] The chassis may define an internal wall, and a first portion of the internal wall may overlap a first portion of one of the side walls of the second pair of side walls. The watch may further include an adhesive positioned in a gap defined between the first portion of the internal wall and the first portion of the side wall of the second pair of side walls. The watch band engagement feature may include a slot formed in the chassis.

[0011] A wearable electronic device may include a housing that includes a chassis defining a rear wall defining a first portion of a rear exterior surface of the wearable electronic device and a hole extending through the rear wall. The housing may also include a glass shell defining a front wall defining a front surface of the wearable electronic device and four side walls extending from the front wall, each of the four side walls defining a portion of a respective side surface of the wearable electronic device. The wearable electronic device may further include a sensor cover covering the hole and defining a second portion of the rear exterior surface of the wearable electronic device, a display within the housing, and a biometric sensor system within the housing and configured to detect a biological parameter of a user.

[0012] The biometric sensor system may include an optical emitter configured to emit light through a first transparent portion of the sensor cover, and an optical sensor configured to detect, through a second transparent portion of the sensor cover, a portion of the light that is reflected by a portion of the user's body. The sensor cover may include a monolithic structure formed from a transparent material, a masked region defining an opaque region of the sensor cover, a first unmasked region defining the first transparent portion of the sensor cover, and a second unmasked region defining the second transparent portion of the sensor cover.

[0013] The wearable electronic device may further include an electrode coupled to the sensor cover and defining a third portion of the rear exterior surface of the wearable electronic device. The electrode may be a first electrode configured to measure a first voltage, the wearable electronic device may further include a second electrode along an exterior surface of the wearable electronic device and configured to measure a second voltage, and the wearable electronic device may be configured to determine an electrocardiogram using the first voltage and the second voltage. The second electrode may be positioned along one of the side walls of the four side walls.

BRIEF DESCRIPTION OF THE DRAWINGS

[0014] The disclosure will be readily understood by the following detailed description in conjunction with the accompanying drawings, wherein like reference numerals designate like structural elements, and in which:

[0015] FIGS. **1**A-**1**C depict an example electronic device;

[0016] FIG. **2** depicts an exploded view of the electronic device of FIGS. **1**A-**1**C;

[0017] FIGS. **3**A-**3**B depict partial cross-sectional views of example electronic devices;

[0018] FIGS. **4**A-**4**B depict partial cross-sectional views of example electronic devices;

[0019] FIGS. **4**C-**4**D depict perspective views of the electronic device of FIG. **4**A;

[0020] FIG. **5**A depicts a partial cross-sectional view of another example electronic device;

[0021] FIG. **5**B depicts a rear perspective view of the electronic device of FIG. **5**A;

[0022] FIG. **5**C depicts a partial cross-sectional view of the electronic device of FIG. **5**A;

[0023] FIGS. **6**A-**6**C depict another example electronic device;

[0024] FIG. **6**D depicts a perspective view of the electronic device of FIGS. **6**A-**6**C;

[0025] FIG. **7**A depicts a perspective view of a chassis for an electronic device;

[0026] FIG. **7**B depicts a partial cross-sectional view of a chassis and a shell for an electronic device;

[0027] FIGS. **8**A-**8**D depict partial cross-sectional views of example electronic devices;

[0028] FIGS. **9**A-**9**B depict an example housing for an electronic device;

[0029] FIGS. **10**A-**10**C depict another example housing for an electronic device; and

[0030] FIG. **11** depicts a schematic diagram of an example electronic device.

DETAILED DESCRIPTION

[0031] Reference will now be made in detail to representative embodiments illustrated in the accompanying drawings. It should be understood that the following descriptions are not intended to limit the embodiments to one preferred embodiment. To the contrary, it is intended to cover alternatives, modifications, and equivalents as can be included within the spirit and scope of the described embodiments as defined by the appended claims.

[0032] The embodiments described herein are generally directed to electronic watches having housings that include glass shells that define multiple sides of the devices. Conventionally, glass has been used in such devices to provide a transparent window over a touchscreen on a front of the device. Described herein, however, are electronic devices with housings that use glass to define front surfaces as well as multiple side exterior surfaces of the housing. For example, a housing for an electronic watch, also referred to as a smartwatch, may include a glass shell that resembles a five-sided box that fits onto (and is coupled to) a chassis or frame member. The glass shell may have a front glass wall that defines a front surface of the watch, as well as multiple side walls, each extending away from the front wall and each respective side wall defining at least part of a respective side surface of the housing. This configuration allows a significant amount of mechanical overlap between the chassis and the glass shell, and thus may increase the strength of the mechanical coupling between the glass shell and the chassis. Further, by forming the side walls of the watch entirely or substantially entirely out of glass, additional functional and aesthetic benefits are realized. For example, displays may be positioned adjacent the side walls to display graphical outputs on (or through) the side walls. Sensors, such as touch sensors, biometric sensors, etc., may leverage the transparent and/or dielectric properties of the glass side walls to sense or detect inputs applied to the side walls.

[0033] The configuration of the side walls of the glass shell also result in the seams or joints between the glass structure and the chassis being positioned further towards the rear of the watch (as compared to conventional watch configurations), away from the user-facing surfaces. This may result in a less distracting, more attractive aesthetic appearance, as there may be fewer distracting seams or other discontinuities between housing components. The glass shell may also improve the water resistance of the watch, as the seams between housing components, where water or other liquids may accumulate, may be positioned further away from the source of the liquid (e.g., rain, sweat, splashes, etc., that may primarily or initially contact the front surface of a watch).

[0034] FIGS. **1**A-**1**B depict an example wearable electronic device **100**. While the instant figures illustrate the wearable electronic device **100** as an electronic watch, this is merely one example embodiment of an electronic device that uses the concepts discussed herein, and the concepts, structures, principles, and techniques described herein may apply equally or by analogy to other electronic devices, including mobile phones, tablet computers, fitness trackers, GPS devices, notebook computers, digital media players (e.g., mp3 players), or other handheld devices, wearable devices, and/or other electronic devices.

[0035] The wearable electronic device **100** (also referred to herein as a watch **100**) includes a housing **102** and a band **108** coupled to the housing **102**. The band **108** may be configured to attach the watch **100** to a user, such as to the user's arm or wrist.

[0036] The housing **102** may at least partially define an internal volume in which components of the watch **100** may be positioned. The housing **102** may also define one or more exterior surfaces of the electronic device, such as all or a portion of one or more side surfaces, a rear surface, a front surface, and the like. The housing **102** may have a generally rectangular shape, when viewed from the front. In such cases, the housing **102** may have four sides and/or side surfaces, and four corners. In some cases, the four sides include a first pair of equal-length sides, and a second pair of equal-length sides that are shorter than the first pair of

equal-length sides. Other shapes are also contemplated, such as generally square shapes (where all of the sides are substantially the same length).

[0037] The housing **102** may include a shell **104** coupled to a chassis **106**. The chassis **106** may be formed of metal (e.g., aluminum, steel, titanium, magnesium, a metal alloy, etc.), or another suitable material such as a polymer, a ceramic, glass, or the like. As described herein, the shell **104** may define multiple walls and multiple exterior surfaces of the housing **102**. For example, the shell **104** may define a front wall that defines a front exterior surface of the watch **100**, and multiple (e.g., four) respective side walls that each extend rearward from the front wall to define at least a portion of respective side exterior surfaces of the watch **100**. The side walls of the shell **104** may define flat side surfaces, as shown in FIGS. **1**A-**1**C, or they may be curved, rounded, semi-circular, or any other suitable shape. The transition between the side walls and the top or front wall of the shell **104** (e.g., where the side wall meets a front wall) may be sharp (e.g., defining a distinct apex or edge), curved, chamfered, rounded, or the like.

[0038] The front surface of the shell **104** may define all or substantially all of the front surface of the housing **102** (and thus the watch). In such cases, the shell **104** is continuous along the front surface, and does not have a hole or other allowance for a separate display cover. In other examples, the front of the shell **104** defines a hole, and a separate display cover is positioned in the hole and attached to the shell **104** or another structure of the device **100**. In cases where the front surface of the shell **104** is continuous, the border of the display **114** shown in FIG. **1**A does not correspond to a seam or opening in the shell **104**, but instead represents the border of the display **114**, a mask that defines a viewable area of the display (e.g., an output region **117**), or the like. In cases where the shell **104** defines an opening in which a display cover is positioned, the border of the display **114** as shown in FIG. **1**A may represent a seam between the display cover and the shell **104**.

[0039] The shell **104** may also define one or more through holes to allow components such as speakers, microphones, barometric sensors, vents, or other components to have access to the external environment. For example, FIGS. **1**A-**1**C illustrate an example location of a through hole **121**. The through hole may be positioned in a side wall of the shell **104**, as shown. Other through holes may be positioned elsewhere on the shell **104**, such as through a different side wall or the front wall.

[0040] The shell **104** may be formed from glass, and may be referred to as a glass shell. Where the shell **104** is formed from glass, it may be formed from any suitable glass, and may be strengthened, tempered, or processed in any other suitable way to provide a target strength, toughness, scratch resistance, appearance, or other property. Example glass compositions may include, without limitation, soda lime glass, aluminosilicate glass, borosilicate glass, glass ceramic, or the like. The glass material may be chemically strengthened (e.g., via ion exchange baths or other techniques), annealed, tempered, or processed using other techniques. The shell **104** may also include one or more coatings, such as oleophobic coatings, anti-reflective coatings, anti-scratch coatings, or any other suitable coatings, films, layers, or the like.

[0041] The shell **104**, or glass shell, may be formed using any suitable technique. For example, the shell **104** may be machined from a single block of glass. As another example, the shell **104** may be formed by slumping and/or molding a sheet of glass. As yet another example, the shell **104** may be formed by attaching multiple pieces of glass together. In the latter example, four glass side walls may be attached to a glass front wall, or two glass side walls may be attached to a glass structure that itself defines a front wall and two side walls. Glass pieces may be attached together using fusion bonding techniques (e.g., softening or melting portions of the glass members and joining them so that they fuse together), adhesives, or any other suitable technique.

[0042] In other cases, the shell **104** may be formed from materials other than glass, such as ceramics, glass ceramics, sapphire, polymers, composites, laminates, or the like. The material for the shell **104** may be optically transparent to facilitate the visibility of displays inside the device. The material for the shell **104** may also be a dielectric material or other material that facilitates the transmission and/or receipt of wireless signals into and/or out of the device. For example, the material may be selected so as to not significantly attenuate wireless signals to and/or from antennas inside the device.

[0043] The chassis **106** may define at least a portion of a rear exterior surface of the watch **100**, and may also define a portion of one or more side exterior surfaces of the watch **100**. The chassis **106** may also define band engagement features **119**. The band engagement features **119** may facilitate the attachment of the watch band **108** to the housing **102**. As shown, the band engagement features **119** include slots that receive end portions of the band **108**, though other types of band engagement features **119** are also contemplated. For example, the band engagement features **119** may be lugs (e.g., protruding features with holes for accepting spring bars), holes (e.g., threaded holes), bars (e.g., about which bands may be wrapped), or other suitable band engagement features. While the housing **102** is largely defined by the shell **104**, a non-glass chassis **106** may have a relatively greater strength and/or resistance to breaking than the shell **104**. Accordingly, configuring the chassis **106** to include the band engagement features (or at least to define a load-bearing portion of the band engagement features) may result in a robust and secure band attachment while maintaining the functional and aesthetic benefits of the shell **104**.

[0044] The shell **104** may cover (e.g., overlie) at least part of a display **114** that is positioned at least partially within the internal volume of the housing **102**. The display **114** may define or correspond to an output region **117** in which graphical outputs are displayed. Graphical outputs may include graphical user interfaces, user interface elements (e.g., buttons, sliders, etc.), text, lists, photographs, videos, or the like. The display **114** may include a liquid crystal display (LCD), an organic light emitting diode display (OLED), or any other suitable components or display technologies. The display **114** may also include or be associated with touch and/or force sensing components, as described herein.

[0045] The shell **104** may include a mask along a mask region **115**. The mask region **115** may form a border around and/or define the output region **117**. The mask may be an opaque material (e.g., one or more layers of ink, dye, film, etc.) that is attached to an inner surface of the shell **104**. The mask may visually occlude internal components of the watch **100**. In some cases, the mask is configured to have an

appearance (e.g., color, apparent texture, etc.) that is similar to the appearance of the display **114** when the display **114** is inactive. In this way, the border between the display **114** and the mask may be visually indistinguishable to the naked eye (at a certain distance, such as 1 foot, 2 feet, 3 feet, or the like).

[0046] The display **114** may include or be associated with touch sensors and/or force sensors that extend along the output region of the display and which may use any suitable sensing elements and/or sensing systems and/or techniques. Using touch sensors, the watch **100** may detect touch inputs applied to the shell **104**, including detecting locations of touch inputs, motions of touch inputs (e.g., the speed, direction, or other parameters of a gesture applied to the shell **104**), or the like. Using force sensors, the watch **100** may detect amounts or magnitudes of force associated with touch events applied to the shell **104**. The touch and/or force sensors may detect various types of user inputs to control or modify the operation of the device, including taps, swipes, multi-finger inputs, single- or multi-finger touch gestures, presses, and the like. Further, as described herein, the touch and/or force sensors may detect motion of an object (e.g., a user's finger) as it is interacting with a crown **110** of the watch **100**.

[0047] The watch **100** may also be configured to produce haptic (e.g., tactile) outputs that are detectable by a wearer or user of the watch **100**. The watch **100** may produce haptic outputs in various ways. For example, the watch **100** may include a movable mass that moves (e.g., oscillates or vibrates translationally and/or rotationally, or otherwise moves to produce a tactile output), which may be detectable by a user when the user is wearing or otherwise contacting (e.g., touching) the watch **100**. Haptic outputs may be produced in response to the watch **100** detecting an input or other user interaction, such as a touch input, a force input, a crown rotation, translation, or other interaction, a button press, or the like.

[0048] The watch **100** also includes a crown **110** (also referred to herein as a crown assembly) having a knob, external portion, or component(s) or feature(s) positioned along a side wall of the housing **102**. At least a portion of the crown **110** (e.g., a knob) may protrude from the housing **102**, and may define a generally circular shape or a circular exterior surface. The exterior surface of the crown **110** (or a portion thereof) may be textured, knurled, grooved, or may otherwise have features that may improve the tactile feel of the crown **110** and/or facilitate rotation sensing.

[0049] The crown **110** may facilitate a variety of potential user interactions. For example, the crown **110** may be rotated by a user (e.g., the crown may receive rotational inputs). Rotational inputs to the crown **110** may zoom, scroll, rotate, or otherwise manipulate a user interface or other object displayed on the display **114** (among other possible functions). The crown **110** may also be translated or pressed (e.g., axially) by the user. Translational or axial inputs may select highlighted objects or icons, cause a user interface to return to a previous menu or display, or activate or deactivate functions (among other possible functions). In some cases, instead of a crown that is rotatable and translatable by a user, the crown may be configured not to rotate or translate relative to the housing **102**, but may nevertheless be configured to detect user interactions that are similar to rotational and translational inputs. For example, the watch **100** may sense, using touch sensors, force sensors, optical sensors, or the like, touch inputs or gestures applied to the crown **110**. Such inputs may include a finger sliding along a surface of the crown **110**, and a finger touching (or pressing on) an end face of the crown **110**. In such cases, sliding gestures may cause operations similar to the rotational inputs, and touches (or presses) on an end face may cause operations similar to the translational inputs. As used herein, rotational inputs may include both rotational movements of the crown (e.g., where the crown is free to rotate), as well as sliding inputs that are produced when a user slides a finger or object along the surface of a crown in a manner that resembles a rotation (e.g., where the crown is fixed and/or does not freely rotate). In some cases, as noted above, haptic outputs may be produced in response to the detection of certain types of inputs applied to the crown **110**. For example, a haptic output may be produced in response to detection of a particular rotational input (e.g., a partial rotation, such as 10° rotation, 20° rotation, 30° rotation, or any other suitable rotation), a translational input, or the like. In the case of crowns that are configured not to rotate or translate relative to a housing, a haptic output may be produced in response to detection of a sliding input applied to a surface of the crown, a touch input on an axial end of the crown, or a force (applied to the axial end of the crown) that satisfies a condition (e.g., exceeds a predetermined force corresponding to an actuation threshold).

[0050] The crown **110** may also include or define an electrode. For example, the crown **110** may be formed from or include a conductive material (e.g., a metal), which may in turn be conductively coupled to a biometric sensing system of the watch **100**, such as an electrocardiograph sensing system. The electrocardiograph sensing system may use voltages detected by the electrode on the crown (as well as other electrodes of the watch **100**, such as the electrodes **122** in FIG. **1**B) to determine an electrocardiogram of the wearer. For example, the user may touch the electrode portion of the crown **110** to allow the electrode portion of the crown **110** to detect a voltage via the wearer's skin.

[0051] In some cases, instead of or in addition to an electrode integrated with the crown **110**, an electrode may be positioned on a surface of the shell **104**. For example, a conductive material (e.g., a metal, indium tin oxide, conductive nanowire coating, etc.) may be positioned on a side surface defined by a side wall of the shell **104**, and a user may contact the conductive material (e.g., with a finger or another body part) to facilitate the detection and/or measurement of a voltage via the conductive material. Electrodes may also or instead be positioned on a front surface defined by a front wall of the shell **104**. Electrodes mounted to a surface of the shell **104** may be coupled to the shell **104** in any suitable way and/or using any suitable technique. For example, the electrodes may be formed by plating or otherwise depositing a conductive material (e.g., a metal) onto a surface of the shell **104** (e.g., using chemical vapor deposition, plasma vapor deposition, electroless plating, or the like). As another example, a metal foil or other conductive film may be secured to the surface of the shell **104** using an adhesive or other bonding agent. An electrode that is coupled to a side wall, front wall, or other surface of a shell **104** may be coupled to a circuit within the housing (e.g., a voltage measuring circuit) in various ways. For example, a through hole may be formed through the shell **104**, and a conductor (e.g., wire, flex circuit, etc.) may extend through the hole to conductively couple the external electrode to the

internal circuit. As another example, the electrode may form a continuous conductor that extends along part of the exterior surface of the shell **104**, around an edge of the shell **104**, and along part of an interior surface of the shell **104**. The portion extending along the interior surface of the shell **104** may be conductively coupled to a circuit within the device.

[0052] The watch **100** may also include other inputs, switches, buttons, or the like. For example, the watch **100** may include a button. The button may be a movable button (as depicted) or a touch-sensitive region of the housing **102**. The button may control various aspects of the watch **100**. For example, the button may be used to select icons, items, or other objects displayed on the display **114**, to activate or deactivate functions (e.g., to silence an alarm or alert), or the like. As noted above, a haptic output may be produced in response to detection of an input applied to the button (or indeed any other input device or system associated with the watch **100**). Buttons may be positioned on or along a side wall of the shell **104**. For example, a button may be positioned next to the crown **110**, or on a side of the watch **100** opposite the crown **110**. In some cases, the watch includes multiple inputs, switches, buttons, or the like.

[0053] In cases where the watch **100** includes buttons, switches, crowns (e.g., the crown **110**), the shell **104** may define through holes that allow components of the buttons, switches, crowns, and/or other components to pass through the shell **104** and access the interior volume of the watch **100**. For example, a shaft portion of a crown may extend through a through hole defined through a side wall of the shell **104**. The shaft portion may be coupled to one or more sensing systems within the watch **100** (e.g., rotation and/or translation sensing systems). An end or knob portion may be coupled to the shaft portion and define the component with which a user interacts (e.g., presses, rotates) to provide inputs to the watch **100** via the crown **110**.

[0054] As described herein, some implementations of a watch or other electronic device may include touch- and/or force-sensitive side surfaces, optionally with displays underlying the side surfaces. These functionalities may be facilitated by the transparent, dielectric properties of the material of the shell **104** (e.g., glass). Accordingly, virtual buttons, crowns, sliders, or other input regions may be displayed on the side surfaces and interacted with by a user. Other types of sensors, such as biometric sensors, imaging sensors, or the like, may be configured to detect inputs on or through the side surfaces as well. Virtual input regions and other sensors may be implemented in conjunction with or instead of physical input components such as a button and a crown **110**.

[0055] FIG. **1**B depicts a rear of the watch **100**. As shown, the chassis **106** defines a portion of the side surfaces of the watch **100**, as well as a portion of the rear exterior surface of the watch **100**. The watch **100** may also include a sensor cover **116** coupled to the chassis **106**. The sensor cover **116** may cover a hole defined by the chassis **106**. In some cases, the sensor cover **116** is positioned at least partially in the hole defined by the chassis **106**. The sensor cover **116** may be configured to allow one or more sensors within the watch **100** to detect conditions external to the watch **100**. For example, the sensor cover **116** may define transparent portions, such as sensor ports **118** and emitter ports **120**. Together, the sensor ports **118** and emitter ports **120** may allow a biometric sensor system of the watch **100** to detect biometric and/or biological parameters of the wearer. For example, the sensor and emitter ports **118**, **120** may facilitate the operation of a photoplethysmograph in which a light is emitted by an optical emitter through the emitter ports **120**, and that light may be reflected (by the wearer's body) and detected, through the sensor ports **118**, by an optical sensor. The sensor and emitter ports **118**, **120** may be transparent portions of the sensor cover **116** (e.g., transparent to at least the particular wavelength(s) of light used by the sensor and emitter of the watch **100**). In some cases, the sensor cover **116** may include a single piece of material (e.g., a monolithic structure) that defines both transparent portions (e.g., the sensor and emitter ports **118**, **120**) as well as other portions of the sensor cover **116** (e.g., non-transparent or opaque portions of the sensor cover **116** that surround the sensor and emitter ports **118**, **120**). The opaque portions of the sensor cover **116** may be defined by masked regions of the sensor cover **116**, and the transparent portions of the sensor cover **116** (e.g., the sensor and emitter ports) may be defined by unmasked regions of the sensor cover **116**.

[0056] In some cases, the sensor cover **116** may be an assembly or otherwise include multiple materials or components. For example, the sensor and emitter ports **118**, **120** may be defined by lenses or other suitably transparent covers, windows, or other materials(s) positioned in openings in a carrier (e.g., the main structure of the sensor cover **116** that holds the sensor and emitter ports **118**, **120**). While FIG. **1**B shows two round sensor ports **118** and two round emitter ports **120**, more or fewer sensor and emitter ports **118**, **120** may be used, and the ports may have shapes and/or positions that differ from those shown in FIG. **1**B.

[0057] Other types of sensors may also or instead be integrated with the sensor cover **116**. For example, electrodes **122** may be positioned on the sensor cover **116**, and may be conductively coupled to components of a sensor system (e.g., an electrocardiograph sensing system) within the watch **100**. The electrodes **122** may be a metal or other conductive material, and may be secured or applied to the sensor cover **116** in various ways. For example, the electrodes **122** may be plated, adhered, or bonded to the sensor cover **116**, and may wrap around a side and along an interior surface of the sensor cover **116** so that the electrodes **122** may conductively couple a user's skin to a sensing system of the watch **100**. Example configurations of the electrodes **122** are described herein. The watch **100** may include two electrodes **122**, as shown, or more or fewer electrodes (e.g., one electrode, three electrodes, four electrodes, or more electrodes).

[0058] FIG. **1**C is a side view of the watch **100**. As shown in FIG. **1**C, the shell **104** defines a first portion of the side exterior surface of the housing **102**, and the chassis **106** defines a second portion of the side exterior surface of the housing. As shown, the shell **104** defines more than half of the height of the side surface, extending nearly the full distance from the front surface to the rear surface. In some cases, the side wall of the shell **104** extends about 50% of the distance from the front surface to the rear surface, about 60% of the distance from the front surface to the rear surface, about 70% of the distance from the front surface to the rear surface, about 80% of the distance from the front surface to the rear surface, about 90% of the distance from the front surface to the rear surface, or about 100% of the distance from the front surface to the rear surface.

[0059] FIG. **2** illustrates a partial exploded view of the watch **100** of FIGS. **1**A-**1**C, showing the shell **104** removed

from the chassis **106**. The shell **104** defines a front wall **201** (also referred to herein as a top wall) that defines a front surface of the watch **100**. The front wall **201** may also define a touch- and/or force-sensitive input surface of the watch **100**, with which a user may interact to control operations of the watch **100**.

[0060] The shell **104** further defines a first pair of side walls **202** (e.g., a side wall **202-1** and an opposite side wall **202-2**) that extend rearward from the front wall **201**, and a second pair of side walls **204** (e.g., a side wall **204-1** and an opposite side wall **204-2**) that extend rearward from the front wall **201**. The side walls of the second pair of side walls **204** may be longer than the side walls of the first pair of side walls **202**. For example, the first pair of side walls **202** may be shorter than the second pair of side walls **204** due to the presence of band engagement features **208** (e.g., band engagement features **208-1**, **208-2**) on those same sides of the watch **100**. In some examples, the side walls all have substantially the same length.

[0061] As shown in FIG. **2**, the band engagement features **208** are defined by slots formed into the chassis **106**, though this is merely one example band engagement feature. In other cases, band engagement features may be or may include lugs, holes, bars, protrusions, or other structures.

[0062] The chassis **106** may define an internal wall **206** that extends from a rear portion of the chassis **106**. The internal wall **206** may extend around and at least partially define an internal volume **207** in which internal components of the watch **100** may be positioned. The internal wall **206** may extend towards the front of the watch **100** and may overlap the side walls **202** and **204**, and may be secured to the interior surfaces of the side walls **202**, **204**, as described herein.

[0063] FIG. **2** also illustrates an example of the display **114**, which may be covered by the shell **104** and may be configured to produce graphical outputs that are visible through a front wall of the shell **104**. The display module **114** may also be configured to wrap or curve along one or more of the side walls of the shell **104** (which may be curved), and may be configured to display graphical outputs that are visible through the one or more side walls. In some cases, additional display modules may be configured to display graphical outputs that are visible through the side walls.

[0064] FIGS. **3**A-**3**B are partial cross-sectional views of embodiments of the watch **100**, viewed along line A-A in FIG. **1**A. FIG. **3**A shows an example configuration of the housing **102**, which may be defined at least in part by the shell **104**, the chassis **106**, and the sensor cover **116**. FIG. **3**B shows another example configuration of the housing **102**, which may be defined at least in part by a shell **300**, a chassis **312**, and the sensor cover **116**. The housings defined by the shells and chassis in FIGS. **3**A-**3**B may define an internal volume in which components such as the display **114**, a sensor module **310**, and other internal components **302** may be positioned. The internal components **302** may include components such as batteries, processors, memory, logic boards, battery charging circuitry (including wireless or inductive charging components such as inductive coils), wireless communication circuitry, antennas, or the like.

[0065] As shown in FIGS. **3**A-**3**B, the side walls **204** (FIG. **3**A) and **318** (FIG. **3**B) each define a portion of a side surface of the watch **100**, and the chassis **106** (FIG. **3**A) and **312** (FIG. **3**B) define a second portion of that side surface of the watch **100**. As shown, however, the side walls each extend rearward more than half of the distance between the front surface of the watch **100** and the rear surface **303** of the watch. This may result in greater sealing as well as a more attractive appearance, as the seam between the shell and the chassis is positioned further away from the front surface of the watch **100**.

[0066] While FIG. **3**A shows flat side walls **204**, in some cases the side walls define a curved portion, such as a curve proximate the distal ends of the side walls (e.g., where the side walls **318** meet the chassis **312**, as illustrated in FIG. **3**B), a curve proximate the location where the front wall meets the side walls (as illustrated in FIG. **4**B), and/or a continuous curvature that extends from the front wall of a shell to the ends of the side walls (e.g., a combination of the curvatures shown in FIGS. **3**B and **4**B). FIG. **3**B illustrates an embodiment of the watch **100** in which a shell **300** defines a curve proximate the distal ends **309** of the side walls **318**. Thus, the outermost points **305** (e.g., **305-1**, **305-2**) of the side surfaces of the watch **100** are defined by the shell **300**, and the outermost points **305** of the curved side walls may visually obscure or hide the seam (at least in some viewing configurations).

[0067] FIG. **3**B illustrates an example in which the side walls **318** define a curved portion proximate the distal ends **309** of the side walls **318**, where the side walls **318** meet the chassis **312**. In some cases, a curvature is also present where the front wall **316** meets the side walls **318** (e.g. similar to the curvature shown in FIG. **4**B), such that a continuous curvature is defined along the side wall, extending from the front wall **316** to the distal ends **309** of the side walls **318**. In such cases, the entireties of the exterior surfaces of the side walls may be curved (e.g., such that the side walls do not define flat or planar exterior surface portions). A continuously curved side wall may define an apex at its outermost point, which may visually obscure or hide the seam between the distal ends of the side walls and the chassis, similar to the configuration shown in FIG. **3**A.

[0068] As noted above, a chassis may define an internal wall (internal wall **206** in FIG. **3**A and internal wall **314** in FIG. **3**B) that may overlap the side walls of the shell (e.g., side walls **204** in FIG. **3**A and **318** in FIG. **3**B (and also the side walls **202**, FIG. **2**). The internal walls may extend about a perimeter of the chassis, and may be composed of multiple wall segments (e.g., four wall segments, as shown in FIG. **2**). The internal walls may resemble a rib or flange extending from a back wall defined by the chassis. The internal walls may be attached to the side walls of the shell in any suitable way, including adhesives, fasteners, or the like. In some cases, as shown in FIG. **3**B, a gap may be defined between the internal wall **314** and the interior surfaces of the side walls **318**. An adhesive **304** or other bonding agent may be positioned in this gap to secure the shell **300** to the chassis **312**.

[0069] With reference to FIG. **3**B, the adhesive **304** may form an adhesive bond with the side walls **318** and the internal wall **314**, thereby retaining the shell **300** to the chassis **312**. As used herein, adhesive bonds may refer to bonds formed as a result of chemical bonds, intermolecular forces (e.g., van der Waals forces), mechanical bonds (e.g., adhesive engaging with pores, textures, or other surface irregularities of the materials), electrostatic forces, and/or any other suitable adhesion mechanism.

[0070] In some cases, the shape of the interior surfaces of the side walls **318** may facilitate a mechanical interlock

between the shell **300** and the chassis **312**. For example, the curvature of the side walls **318** may define convex exterior surfaces and corresponding concave interior surfaces of the shell **300**. The concave interior surfaces may define features that mechanically interlock with the adhesive **304** to retain the shell **300** to the chassis **312** and/or prevent the removal of the shell **300** from the chassis **312**. More particularly, the distal ends **309** of the side walls **318** are further towards the center of the device than the outermost points **305** of the side walls **318**. As such, when the adhesive **304** is hardened (e.g., cured, solidified, etc.), the distal ends **309** of the side walls **318** are mechanically interlocked with an undercut region of the adhesive **304**, thereby inhibiting separation of the shell **300** from the chassis **312**.

[0071] The shells **104**, **300** may have a substantially uniform thickness. For example, a thickness of the side walls of a shell (e.g., side walls **202**, **204**, **318**) may have substantially the same thickness as the front wall of the shell. The shell may have a thickness between about 1.5 mm and about 0.5 mm. In some cases, the thickness may be about 1.5 mm, about 1.25 mm, about 1.0 mm, about 0.75 mm, about 0.5 mm, or any other suitable thickness. In some cases, different portions of the shell may be thicker than others. For example, the distal ends of the shell (e.g., the free ends of the side walls), and/or the curved portions of the side walls, may be thicker than other portions of the shell.

[0072] While FIGS. **3**A-**3**B illustrate physical engagement between a chassis and one pair of side walls (e.g., side walls **204**, **318**), it will be understood that the side walls **202**, or any other side walls of a shell as described herein, may have the same or similar configuration as the side walls shown in FIGS. **3**A-**3**B, and may use the same or similar structures and techniques to physically engage a shell with a chassis.

[0073] As described above, the watch **100** may include a display **114**. The display **114** may be coupled to an interior surface of the front wall of the shell (e.g., front wall **201** in FIG. **3**A or front wall **316** in FIG. **3**B), or may otherwise be positioned within the housing of the watch **100** such that it can produce graphical outputs that are visible through the front wall. In order to define a boundary of an active area of the display **114** and/or prevent the visibility of internal components of the watch **100**, an opaque mask **306** may be positioned along a front interior surface of the shell (as shown in FIGS. **3**A and **3**B). In some cases, the opaque mask **306** is positioned along all of the internal surface of the shell except the active display area (e.g., such that the opaque mask **306** defines an opaque boundary around a transparent portion of the shell through which the display is viewed). In some cases, the opaque mask **306** may be omitted from certain areas of the internal surface. For example, in cases where a display, sensor, or other component may require transparency or translucency, the opaque mask may be omitted from that particular area. The opaque mask **306** may be one or more layers of ink, dye, film, deposition layer (e.g., a layer of material deposited by a vapor or other deposition technique), coating, or the like.

[0074] As shown in FIGS. **3**A-**3**B, the watch **100** also includes one or more sensors, represented by a sensor module **310**. The sensor module **310** may not represent the exact size, location, or configuration of the sensors in the watch **100**, but is intended more as a schematic illustration of the sensors. In some cases, the sensor module **310** may include sensing systems (or components thereof) such as a photopletheysmograph, an electrocardiograph, a pulse oximeter, or other biometric or other sensing systems. Biometric sensing systems may be configured to detect and/or measure biological parameters of a wearer. Such sensing systems may include components such as voltage sensors, optical emitters, optical sensors, cameras, or any other suitable components to facilitate biometric or other sensing. The sensing systems of the watch **100** may access or otherwise interact with the outside environment via the sensor cover **116**, which may be positioned in an opening **307** in the chassis.

[0075] The sensor cover **116** may be formed from a transparent material such as glass, ceramic, sapphire, metal, polymer, a composite (e.g., fiber-reinforced polymer), or the like. In some cases, the sensor cover **116** may be formed from an opaque material and may define openings in which transparent materials or components are positioned, as described herein.

[0076] As noted above, the sensor cover **116** may define transparent portions, such as sensor ports **118** and emitter ports **120** (FIG. **1**B). FIGS. **3**A and **3**B illustrate one example configuration of the sensor cover **116** in which the sensor ports **118** are defined by transparent or translucent materials positioned in openings in a carrier member **311**. The carrier member **311** may be formed of an opaque material, or it may be formed of a transparent material and include a mask (e.g., dye, ink, film, etc.) to produce an opaque appearance.

[0077] In other cases, instead of separate materials or components positioned in openings in the carrier member **311**, the sensor ports **118** may be defined by transparent portions of a monolithic carrier member **311**. In such cases, the carrier member **311** may be formed of a transparent material and may include a mask (e.g., dye, ink, film, etc.) to define opaque regions in areas other than the sensor ports **118** (e.g., surrounding the sensor ports **118**). While FIGS. **3**A-**3**B illustrate example configurations of the sensor ports **118**, the same and/or similar configurations may apply to the emitter ports **120** as well. A sensor cover **116** may also use inset transparent materials to provide optical access for some sensor components, and use monolithic transparent regions of a carrier to provide optical access for other sensor components.

[0078] As noted above, electrodes **122** may be positioned on the sensor cover **116**, and may be conductively coupled to an electrocardiograph sensing system (represented by the sensor module **310**). The electrodes **122** may be a metal or other conductive material. The electrodes **122** may wrap around an edge of the sensor cover **116** to define an exterior portion and an interior portion of each electrode. The exterior portion may define part of the rear surface of the watch **100** and may be positioned so that it is likely to be in contact with a user when the watch **100** is being worn. The interior portion of an electrode may be conductively coupled to a voltage sensor or other component or system, and a voltage measurement from the electrode (optionally along with voltage measurements from other electrodes on the sensor cover **116**, the crown **110**, and/or elsewhere on the device) may be used by an electrocardiograph to determine an electrocardiogram of the wearer.

[0079] FIG. **4**A depicts an example cross section of a watch **400**, which may be an embodiment of the watch **100**. The description of the various components and elements of the watch **100** may also be applicable to the watch **400** depicted in FIG. **4**A. A redundant description of some of the components is not repeated herein for clarity.

[0080] Whereas the watch **100** includes a display that is viewable through the front wall **404** of the shell, the watch **400** includes a display **402** that is viewable through the front wall **404** of a shell **401** (which may be the same as or similar to the shell **104**) as well as through the side walls **406** of the shell **401**. For example, the display **402** may define a first portion **418** that is adjacent the front wall **404** of the shell **401** (or otherwise viewable through the front wall), as well as second portions **420** that are adjacent the side walls **406** of the shell **401** (or otherwise viewable through the side walls). The display **402** may be a single display component that is bent, flexed, or otherwise formed to the contour of the interior surfaces of the shell **401**. In other cases, the display **402** may include separate display components. For example, one physical display stackup may be used to display graphical outputs through the front wall **404** of the shell **401**, while a separate physical display stackup may be used to display graphical outputs through the side wall **406-1**, and yet another separate physical display stackup may be used to display graphical outputs through the side wall **406-2**. The boundary between the physical display stackups may be at the line **416**, though this is merely one example. In some cases, the stackup that is vieweable through the front wall **404** is substantially planar, and the stackups that are viewable through a side wall are non-planar (e.g., curved). In cases where a single display stackup is used to display graphical outputs through both the front wall and one or more side walls, the lines **416** may represent a functional boundary between "front facing" and "side facing" display regions. Further, while the watch **400** shows displays adjacent two side walls, this is merely one embodiment, and a watch as described herein may have displays that can display graphical outputs on one, two, three, or four side walls of the device.

[0081] The watch **400** may also include a mask **410** along some portions of the interior surface of the shell **401**. For example, the mask **410** may be positioned along a portion of the shell **401** that is in contact with an adhesive **414** (where the adhesive **414** attaches the shell **401** to a chassis **408**, in a manner similar to the adhesive **304**, FIG. **3**B). The mask **410** may also be positioned along other portions of the shell **401**, such as to mask or occlude boundaries between different display stackups (e.g., to cover a gap between components at line **416**). The mask **410** may be an opaque material (e.g., one or more layers of ink, dye, film, etc.) that is attached to an inner surface of the shell **401**.

[0082] FIG. **4**B illustrates another example of the watch **400**, in which a shell **431** defines a curved surface where the side walls **432** meet the front wall **433**. The curved surface may have a corresponding curved (e.g., concave) interior surface, that a display **434** may be proximate or attached to. In some cases, the display **434** is adhered to the interior surface of the shell **431**, including along an interior surface of the front wall **433**, the interior surface of the side walls **432**, and the interior concave surface between (and joining) the front wall **433** and the side walls **432**. As the side walls **432** in FIG. **4**B do not define a curve at their distal ends, the side walls **432** may define flanges **435**, which may engage an adhesive **436** (in a manner similar to the sidewalls **406** and adhesive **414** in FIG. **4**A) to retain the shell **431** to the chassis **408**.

[0083] FIGS. **4**C-**4**D illustrate the watch **400** of FIG. **4**A with graphical outputs displayed through a side wall by a side-facing portion of the display **402** (e.g., a second portion **420-1** of the display **402**). Notably, the display **402** can produce various types of graphical outputs on the sides of the device, and can dynamically change or vary the graphical outputs based on factors such as time of day, an active application of the watch **400**, a current activity of the wearer (e.g., exercise, listening to music, watching video media, sleeping, working, running, swimming, etc.), or any other suitable factor. Further, the watch **400** may include touch sensing systems, force sensing systems, or other types of sensing systems that can detect inputs applied to the front and/or side walls of the watch **400** (e.g., touch inputs applied by a user). Accordingly, the graphical outputs displayed on the sides of the watch **400** may be buttons, sliders, or other affordances.

[0084] FIG. **4**C, for example, illustrates the watch **400** while displaying a first set of graphical outputs on a side display region **425** of the watch **400**. For example, the graphical outputs may include buttons **422**, **424**, and **426**, where the buttons **424**, **426** are configured as directional buttons (e.g., arrows). The buttons **422**, **424**, **426** may be used to navigate within a graphical user interface that is displayed on a front display region **423** of the watch **400** (e.g., to move a cursor or other "active" element indicator with the directional buttons, and select particular affordances, functions, or other elements with the button **422**). The directional buttons **424**, **426** may control functions such as volume (e.g., of a speaker of the watch **400** or of other devices that may be controlled by the watch such as a phone, headphones, a tablet computer, a wireless speaker unit, or the like).

[0085] FIG. **4**D illustrates the watch **400** while displaying a second set of graphical outputs on the side display region **425** of the watch **400**. For example, the graphical outputs in FIG. **4**D may include a start button **428** and a stop button **430**. The watch **400** may transition from the first set of graphical outputs (e.g., those shown in FIG. **4**C or any other graphical outputs or even a blank side display region) to the second set of graphical outputs upon activation of an application, detection of an activity of the wearer, or the like. For example, the start and stop buttons **428**, **430** may control a stop watch or other fitness tracker, or it may control music or other media playback.

[0086] The buttons shown in FIGS. **4**C-**4**D are merely examples of buttons, affordances, images, or other graphical outputs that may be displayed on a side display region of a watch **400**. Other types of graphical outputs may be displayed on a side display region of a watch depending on user settings, detected conditions of the watch and/or of the user, or based on other factors or triggering events.

[0087] In some cases, other types of sensing systems may be integrated with or otherwise use the side walls of a watch as input surfaces. For example, a fingerprint sensor may be positioned within the watch **400** adjacent a side wall of the shell **401**. A user may place a finger on the side wall in the region of the fingerprint sensor (which may be graphically indicated by a graphical output of a display, a marking on the shell **401**, or the like), and the fingerprint sensor may capture an image or other representation of a user's fingerprint to authenticate the user and, optionally, unlock the watch **400** and/or other devices with which the watch **400** can communicate. In some cases, cameras, optical sensors, photoplethysmographs, blood oxygen sensors, ambient light sensors, depth sensors, or the like, may be positioned within the watch **400** and may be configured to access the external

environment using the transparency of the shell **401** (including the side walls of the shell **401**).

[0088] In some cases, a watch may include a glass (or other transparent dielectric material) shell that defines a front surface and at least a portion of the side surfaces of the watch, similar to those described with respect to FIGS. **1**A-**4**D, as well as a glass (or other transparent dielectric material) component that defines a rear surface and another portion of the side surfaces of the watch. FIGS. **5**A-**5**C illustrate an example watch **500** that includes a first shell **502** (e.g., a first glass shell) that defines a top or front surface **504** of the watch **500**, as well as a first portion of the side surfaces **506** of the watch **500**, and a second shell **508** (e.g., a second glass shell) that defines a portion of a rear surface **510** as well as a second portion of the side surfaces **506**.

[0089] The second shell **508** may be attached to the first shell **502** via an adhesive **520**, which may be the same as or similar in materials, function, etc., to the adhesives described elsewhere herein (e.g., the adhesive **304**, FIG. **3**B). The first shell **502** and the second shell **508** may include masks **522**, **523** (respectively), which may be positioned along an interior surface of the first and second shells **502**, **508** (e.g., along a portion of the front interior surface and side interior surfaces (which may have concave curvatures) of the first shell **502**, and along a portion of a back interior surface). In some cases, the masks are opaque and mask, cover, or occlude internal components. Openings in the masks (or areas where the mask is not applied) may define display regions or other windows, openings, or transparent regions for displays, sensors, or other components or functions. The masks **522**, **523** may be an opaque material (e.g., one or more layers of ink, dye, film, etc.) that is attached to an inner surface of the shells.

[0090] The watch **500** may also include a frame **512** within the watch **500**. The frame **512** may act as a chassis or main structural component of the watch **500** to which other components may be coupled. For example, the second shell **508** may be secured to the frame **512** (e.g., via fasteners, adhesives, mechanical interlocks, or any other suitable attachment technique). Other components may also be coupled to the frame **512** (e.g., logic boards, processors, batteries, sensor modules, displays, memory, battery charging circuitry, etc.). The frame **512** may be formed of metal (e.g., aluminum, steel, an alloy, etc.), a polymer, a composite, or any other suitable material.

[0091] The second shell **508** may also define a sensor cover **514**. The sensor cover **514** may be configured to allow one or more sensors within the watch **500** to detect conditions external to the watch **500**. For example, the sensor cover **514** may define transparent portions, such as sensor ports **525** and emitter ports **527** (FIG. **5**B) which may be the same as or similar to the sensor and emitter ports **118**, **120** described herein. A redundant description of some of the components is not repeated herein for clarity. The sensor cover **514** may protrude outwardly from the rear of the watch so that it can press against the skin on the wrist of a user, which may help facilitate positive contact between the sensor cover **514** and the user's skin, thereby improving the effectiveness of biometric sensors of the watch.

[0092] Similar to other watches described herein, electrodes **516** may be positioned on the sensor cover **514**, and may be conductively coupled to components of a sensor system (e.g., an electrocardiograph sensing system) within the watch **500**. The electrodes **516** may be a metal or other conductive material, and may be secured or applied to the sensor cover **514** in various ways. For example, the electrodes **516** may be plated, adhered, or bonded to the sensor cover **514**, and may extend through holes **518** formed through the sensor cover **514** (or formed through the second shell **508** more generally) so that the electrodes **516** may conductively couple a user's skin to a sensing system of the watch **500**. The watch **500** may include two electrodes **516**, as shown, or more or fewer electrodes (e.g., one electrode, three electrodes, four electrodes, or more electrodes).

[0093] In some cases, as shown in FIG. **5**A, a sensor cover **514** may protrude somewhat from a surrounding region of the rear surface **510**. The protrusion of the sensor cover **514** may be formed by a region of the second shell **508** that has an increased thickness relative to a region of the second shell **508** that surrounds or is adjacent the sensor cover **514**. For example in the case of a glass second shell **508**, the increased thickness may be formed by forming a single monolithic piece of glass such that the piece of glass defines the increased thickness region, or it may be formed by applying one or more additional layers of glass to the second glass shell **508**. FIG. **5**A illustrates an example location of a seam or boundary **524** where an additional layer of glass (or other suitable material) has been applied to a main portion of the second shell **508** to define the increased thickness region of the sensor cover **514**. The layer of glass may be attached to the main portion of the second shell **508** in any suitable way, such as with an adhesive, by direct fusion of the layer to the main portion (e.g., via heat and pressure applied to the layer and the main portion), laser welding, or by any other suitable technique. In other cases, the protrusion may be formed by a curved region formed in a region of the second shell **508** that otherwise has a substantially uniform thickness (e.g., such that a concave recess is defined along the interior surface and a convex bump is defined along the exterior surface of the second shell **508**).

[0094] FIG. **5**B shows a rear perspective view of the watch **500**. As shown in FIG. **5**B, the rear surface **510** of the watch may be a substantially continuous piece of glass (with the exception of the electrodes **516**, if equipped, and the lenses, windows, or other inset members for emitter and receiver ports, if equipped). FIG. **5**B also illustrates a watch band **529** attached to the watch housing via watch band engagement features, as described in greater detail with respect to FIG. **5**C.

[0095] FIG. **5**C is a partial cross-sectional view of the watch **500**, viewed along a line similar to line B-B in FIG. **1**A. FIG. **5**C illustrates one example configuration in which watch band engagement features are defined by the frame **512**. For example, the frame **512** may define structural segments **530** that extend through an opening **531** in the first shell **502** (and/or the second shell **508**, depending on the particular structural configuration of the shells). The structural segments **530** may define watch band engagement features **532** to which the watch band **529** (FIG. **5**B) may be coupled. As shown, the watch band engagement features **532** include slots that receive an end of the watch band **529**, though this is merely one example embodiment. In other cases, the watch band engagement features **532** may be bars, fasteners, threaded holes, lugs, or any other suitable structure for coupling a watch band to the watch **500**. One potential advantage of the configuration shown in FIG. **5**C is that any loads from the watch band **529** are directly coupled to an internal structural component (e.g., the frame

512), rather than the shells **502**, **508**. This may facilitate the use of thinner material (e.g., glass) for the shells, or otherwise help prevent or reduce damage to the shells.

[0096] In some cases, band engagement features may be coupled directly to a shell. FIGS. **6**A-**6**D illustrate an example watch **600** in which band engagement features (specifically, lugs) may be attached directly to an exterior surface of a shell that defines a top and side surfaces of the watch **600**.

[0097] FIG. **6**A, for example, shows a portion of a watch **600** with the shell **602** separated from a chassis **604**. The shell **602** may define a top or front wall, and four side walls, and the chassis **604** may define an internal wall that overlaps the side walls and is configured to be attached to the side walls of the shell **602**. Whereas some shells described herein may have side walls of different lengths, the four side walls of the shell **602** may have substantially the same lengths. More particularly, the shorter side walls of other shells described herein may be configured to accommodate a watch band engagement feature. Because the watch band engagement features of the watch **600** are attached directly to the shell **602**, the side walls of the shell **602** may all be the same or substantially the same length. Of course, side walls of different lengths may be used.

[0098] FIG. **6**B shows the watch **600** with the chassis **604** and the shell **602** attached to one another, and with a set of band engagement features **606** shown separated from the shell **602**. FIG. **6**C shows the watch **600** with the band engagement features **606** coupled to the shell **602**. FIG. **6**D is a perspective view of the watch **600** with the band engagement features **606** attached to the shell **602** and a watch band **608** coupled to the watch housing via the band engagement features **606**. The watch band **608** may be coupled to the band engagement features **606** in any suitable manner. For example, the band engagement features **606** may define holes into which a spring bar (or any other suitable bar, rod, or other member) may extend to define a bar to which the band **608** may attach. The band engagement features **606** may be formed of any suitable material. For example, they may be formed from metal, metal alloys, glass, polymer, ceramic, or the like.

[0099] The band engagement features **606** may be attached to the shell **602** in various ways. For example, the band engagement features **606** may be attached to the shell **602** via adhesives, fasteners, fusion bonding, mechanical interlocks, or the like. In some cases, the band engagement features **606** may be formed of glass and may be attached to the shell **602** by fusing the glass of the band engagement features **606** to the glass of the shell **602**. In some cases, instead of attaching separate band engagement features **606** to the shell **602**, the band engagement features **606** may be integrally formed with the shell **602** (e.g., the shell **602** and the band engagement features **606** may be formed as a single monolithic structure).

[0100] In some cases, the band engagement features **606** may be secured to the chassis **604** instead of the shell **602**. In such cases, holes may be defined through the shell **602**, and the band engagement features **606** may be secured to the chassis **604** through the holes. The chassis **604** may also define holes (e.g., threaded holes), and the band engagement features **606** may be secured to the chassis **604** via fasteners (e.g., threaded fasteners) that engage the holes in the chassis **604**. Other techniques for securing the band engagement features **606** to the chassis **604** are also contemplated.

[0101] As described herein, a shell may be attached to a chassis via an adhesive that is positioned in a gap defined between overlapping portions of an internal wall of the chassis and side walls of the shell. Any suitable type of adhesive may be used to attach a chassis to a shell, including but not limited to thermoset adhesives, thermoplastic adhesives, epoxies, resins, or the like.

[0102] FIGS. **7**A-**7**B illustrate example structures and techniques that may be used to introduce the adhesive or other bonding agent into the gap. FIG. **7**A, for example, illustrates an example chassis **700**, which may be an embodiment of other chassis described herein (e.g., the chassis **106**, **408**, **604**, etc.).

[0103] The chassis **700** may define a rear wall **702** and a wall **704** (e.g., an internal wall, such as the internal wall **206**) extending from the rear wall, which may define a portion of a rear surface of the watch in which the chassis **700** is used. The chassis **700** may also define a hole **706** in the rear wall **702**. The hole **706** may be adapted to receive a sensor cover, such as the sensor cover **116** described above, and may facilitate access to the external environment by sensor systems in the watch. The chassis **700** may also define an adhesive entry port **708**. The adhesive entry port **708** may be through the hole that extends through the wall **704** and communicates with the gap between the wall **704** and a side wall of a shell. As shown, the adhesive entry port **708** is formed through the wall **704**, though it may be formed through any portion of the chassis **700** that communicates with the gap. Moreover, while one adhesive entry port is shown, the chassis **700** may include additional adhesive entry ports as well to facilitate introduction of an adhesive into the gap. The chassis **700** may also include vent ports to allow air to escape the gap as adhesive is flowed into the gap.

[0104] FIG. **7**B is a partial cross-sectional view of the chassis **700** and a shell **710** (as viewed along line C-C in FIG. **1**A), after the shell **710** and the chassis **700** are assembled so that they can be adhered together. As shown in FIG. **7**B, a gap **714** may be defined between an interior surface of the side wall of the shell **710** and the internal wall **704** of the chassis **700**. Once the shell **710** and the chassis **700** are in a desired position relative to one another, an adhesive may be introduced into the gap **714** through the adhesive entry port **708**, as indicated by flow lines **712**. The adhesive may flow into the gap **714** and around the internal wall **704** such that it occupies at least a portion of the gap **714**. The adhesive may then be allowed to cure or harden, thereby securing the shell **710** to the chassis **700**.

[0105] The shell **710** and the chassis **700** may be adhered to one another before all of the internal components of the device are positioned in the internal cavity. In such case, components may be positioned in the device by passing them through the hole **706** in the rear wall **702** of the chassis **700**.

[0106] FIGS. **8**A-**8**D illustrate partial cross-sectional views of shells and chassis, showing various configurations and techniques for delivering and containing the adhesive to the desired locations. The cross-sectional views in FIGS. **8**A-**8**D are viewed along a line similar to the line A-A in FIG. **1**A.

[0107] FIG. **8**A, for example, includes a shell **800** and a chassis **802** (which may be embodiments of the shell **104** and the chassis **106**). As described herein, the chassis defines an internal wall **803** that overlaps a side wall **805** of the shell **800**, and a gap is defined between the internal wall **803** and

the interior surface of the side wall **805**. An adhesive **804** has been introduced into the gap to secure the shell **800** and the chassis **802** together, as described herein. For example, the adhesive **804**, in a flowable state, may have been introduced into the gap through a hole in the chassis **802**. FIG. **8**A also illustrates example engagement features **807** that may be formed on an outward-facing side of the side wall **805**. The engagement features **807** may be configured to mechanically engage and/or interlock with the adhesive **804** to help retain the adhesive **804** to the internal wall **803**, thereby contributing to the mechanical coupling between the shell **800** and the chassis **802**. The engagement features **807** are illustrated as channels extending along the internal wall **803**, though other features are also contemplated, such as holes, textures, dovetails, protrusions, bumps, recesses, dimples, posts, or the like.

[0108] In order to contain the adhesive **804** in the gap during the introduction of the adhesive **804**, a compliant member **806** may be positioned between and in contact with the internal wall **803** of the chassis **802** and an interior surface of the side wall **805** of the shell **800**. The compliant member **806** may be an elastomeric or deformable polymer or other material that can be compressed between the shell **800** and the chassis **802** to cause the compliant member **806** to conform to the shape of the surfaces it contacts and to form a seal therebetween. The compliant member **806** may be an o-ring, a foam that is applied to the chassis **802**, or any other suitable sealing material or component. The compliant member **806** (and any other compliant members described herein) may be formed from any suitable material, such as silicone, nitrile, rubber, Buna N, or the like.

[0109] The compliant member **806** may help contain the adhesive **804** in the gap between the shell **800** and the chassis **802** during introduction of the adhesive **804**. This may help ensure that the adhesive **804** fills the gap, rather than simply spilling out into the interior of the device and/or contacting a display stack **808**. The compliant member **806** may be secured to the internal wall **803** of the chassis **802** (e.g., via adhesive, self-adhesion, mechanical means, etc.) so that it is retained in position during assembly and during introduction of the adhesive **804**. The compliant member **806** may also act as an environmental seal to help inhibit the ingress of liquid or other contaminants (e.g., should there be any gaps in the adhesive **804** or if the adhesive **804** otherwise may not provide environmental sealing).

[0110] FIG. **8**B illustrates another example configuration of a shell **810** and a chassis **812**. In this example, a side wall **815** of the shell **810** may not define a concave interior surface, and instead may have an increased thickness (e.g., relative to a top or front wall of the shell **810**), and may define a substantially planar interior surface. The chassis **812** may define an internal wall **817**, and a compliant member **816** may be positioned between and in contact with the chassis **812** and the side wall **815** of the shell **810**.

[0111] The increased thickness of the side wall **815** may result in little or no gap between the interior surface of the side wall **815** and the internal wall of the chassis **812**. Accordingly, in some cases, little or no adhesive may be introduced in the gap, and the shell **810** may be secured to the chassis **812** using mechanical interlocks, fasteners, or other materials and/or techniques. In other cases, an adhesive, which may have a lower viscosity than other adhesives, may be introduced into the gap to secure the shell **810** to the chassis **812**. The compliant member **816**, which may otherwise be the same as or similar to the compliant member **806**, may inhibit ingress of liquids or other contaminants into the interior of the watch. The watch may also include a display stack **818**.

[0112] FIG. **8**C illustrates another example configuration of a shell **820** and a chassis **822**. In this example, the internal wall **827** defines a flange portion **829**. The flange portion **829** may extend at an angle from the main portion of the internal wall **827** (e.g., the vertical portion, as oriented in FIG. **8**C) and may have a curve, angle, contour, or shape that is the same as or otherwise conforms to the curve, angle, contour, or shape of the side wall **825** of the shell **820**. The flange portion **829** may be positioned closer to the interior surface of the side wall **825**, thus forming an area where the gap between the side wall **825** and the internal wall **827** is reduced (relative to other areas of the gap). This may increase the effectiveness of the compliant member **826**, as the smaller gap may reduce the amount and/or pressure of the adhesive **824** on the compliant member **826** during the adhesive introduction process. This may help ensure that the adhesive **824** fills the gap, rather than simply spilling out into the interior of the device and/or contacting a display stack **828**. The flange portion **829** may also increase the strength and/or durability of the assembled device, as the flange portion **829** produces a larger contact area between the chassis **822** and the shell **820** in the event of a drop event or other impact that could force the chassis **822** and the shell **820** into contact with one another.

[0113] FIG. **8**D illustrates another example configuration of a shell **830** and a chassis **832**. In this example, the seal is omitted from at least a portion of the gap between the internal wall **837** and the side wall **835**, such that adhesive **834** can flow out of the gap and into other areas of the device. For example, a channel **839** may be defined between the interior surface of the side wall **835** and the internal wall **837** of the chassis. When the adhesive **834** is introduced into the gap between the side wall **835** and the internal wall **837**, the adhesive **834** may flow through the channel **839**. As shown, the adhesive **834** flows along a rear-facing surface of a display stack **838**. The adhesive **834** may act as a sealing or potting material to help seal and/or encapsulate the display stack **838** (which may include display components, touch-sensing and/or force-sensing components, or the like). The adhesive **834** may also act as a mask that inhibits visibility of internal components of the device.

[0114] The thickness of the adhesive **834** along the display stack **838** (or at any other locations outside of the gap between the side wall **835** and the internal wall **837**) may be defined by placing a removable mold surface in the internal cavity defined by the shell **830** and the chassis **832**. For example, a removable plate may be set apart from the rear-facing surface of the display stack **838**. When the adhesive **834** is introduced into the gap between the side wall **835** and the internal wall **837**, the adhesive **834** will flow into the gap, flow through the channel **839**, and flow into the space between the removable plate and the display stack **838**. Once at least partially cured and/or hardened, the removable plate may be removed. In cases where electrical components are covered and/or encapsulated by the adhesive **834**, portions of the adhesive **834** may be ablated or removed to expose the components. For example, adhesive may be removed to expose electrical contacts, connectors, circuit elements, or other features or components. In some cases, the adhesive **834** may be prevented from contacting

and/or covering the electrical connectors, contacts, circuit elements, or the like, so that they can be accessed without having to remove the adhesive **834** from those areas. While FIG. **8**D illustrates the adhesive **834** covering at least part of the display stack **838**, the adhesive **834** may be allowed to flow against other internal components as well. In some cases, the adhesive **834** may be injected so that it occupies substantially all of the otherwise unused or empty internal space in the device.

[0115] FIGS. **9**A-**9**B illustrate an example shell **902** and chassis **904** that may be used to form at least part of a housing for a watch. The shell **902** and the chassis **904** may be embodiments of the shell **104** and the chassis **106**, described above.

[0116] FIG. **9**A shows the shell **902** separate from the chassis **904**. As shown, the watch band engagement features **908** are defined entirely by the chassis **904**. For example, all of the surfaces of the slots that are configured to receive the watch band are defined by the chassis **904**. Also, the watch band engagement features **908** may be formed in the chassis **904** prior to the chassis **904** being attached to the shell **902**. The shell **902** may define cutout regions **906** that engage with and/or accept a portion of the chassis **904** that forms the watch band engagement features **908**. FIG. **9**B is a side view of the shell **902** and the chassis **904** after being assembled. As shown in FIG. **9**B, the shell **902** does not extend into or otherwise define any surfaces or edges of the watch band engagement features **908**.

[0117] FIGS. **10**A-**10**C illustrate an example shell **1002** and chassis **1004** that may be used to form at least part of a housing for a watch. More particularly, FIGS. **10**A-**10**C illustrate an example configuration and manufacturing process in which watch band engagement features (e.g., slots) are formed after the shell **1002** and the chassis **1004** are assembled together, and in which a portion of the shell **1002** may define a portion of the watch band engagement features **1012**.

[0118] FIG. **10**A shows the shell **1002** separate from the chassis **1004**. As shown, the chassis **1004** includes material at the locations **1006** where the watch band engagement features (e.g., watch band slots) are to be formed. Prior to forming the watch band engagement features, the shell **1002** may be attached to the chassis **1004**. Adhesive (e.g., adhesive **1010**, FIG. **10**B) may be used to secure the shell **1002** to the chassis **1004**. The adhesive **1010** may be applied using the techniques described with respect to FIGS. **7**A-**7**B, for example.

[0119] Once the shell **1002** is secured to the chassis **1004**, the assembly may be machined or otherwise processed to form the watch band engagement features **1012**. FIG. **10**C, for example, illustrates the shell **1002** and chassis **1004** after the watch band engagement features **1012** have been formed. The watch band engagement features **1012** may be formed by any suitable operation or operations, such as machining, grinding, laser or other beam-based cutting operation, or the like. Operations such as lapping and/or polishing may also be performed after a first material removal operation in order to produce a desired surface finish or texture (or lack of texture) on the surfaces of the watch band engagement features **1012**.

[0120] In some cases, the operation of forming the watch band engagement features **1012** results in material being removed from both the shell **1002** and the chassis **1004**. This may also result in the shell **1002** defining a portion of the watch band engagement features **1012**. For example, as shown in FIG. **10**B, an end surface **1014** of the shell **1002** may define part of a watch band slot, and a watch band, when attached to the housing via the watch band slot, may contact the end surface **1014** of the shell **1002**. In some cases, a coating or covering may be applied to the end surface **1014** of the shell **1002**. For example, a polymer coating may be applied to the end surface **1014** to prevent chipping or other damage to the shell **1002**.

[0121] FIG. **11** depicts an example schematic diagram of an electronic device **1100**. The electronic device **1100** may be an embodiment of or otherwise represent the watch **100** (or any other watches or device(s) described herein). The device **1100** includes one or more processing units **1101** that are configured to access a memory **1102** having instructions stored thereon. The instructions or computer programs may be configured to perform one or more of the operations or functions described with respect to the electronic devices described herein. For example, the instructions may be configured to control or coordinate the operation of one or more displays **1108**, one or more touch sensors **1103**, one or more force sensors **1105**, one or more communication channels **1104**, one or more audio input systems **1109**, one or more audio output systems **1110**, one or more positioning systems **1111**, one or more sensors **1112**, and/or one or more haptic feedback devices **1106**.

[0122] The processing units **1101** of FIG. **11** may be implemented as any electronic device capable of processing, receiving, or transmitting data or instructions. For example, the processing units **1101** may include one or more of: a microprocessor, a central processing unit (CPU), an application-specific integrated circuit (ASIC), a digital signal processor (DSP), or combinations of such devices. As described herein, the term "processor" is meant to encompass a single processor or processing unit, multiple processors, multiple processing units, or other suitably configured computing element or elements. The processing units **1101** may be coupled to a circuit board.

[0123] The memory **1102** can store electronic data that can be used by the device **1100**. For example, a memory can store electrical data or content such as, for example, audio and video files, images, documents and applications, device settings and user preferences, programs, instructions, timing and control signals or data for the various modules, data structures or databases, and so on. The memory **1102** can be configured as any type of memory. By way of example only, the memory can be implemented as random access memory, read-only memory, Flash memory, removable memory, or other types of storage elements, or combinations of such devices.

[0124] The touch sensors **1103**, also referred to herein as touch-sensing systems, may detect various types of touch-based inputs and generate signals or data that are able to be accessed using processor instructions. The touch sensors **1103** may use any suitable components and may rely on any suitable phenomena to detect physical inputs. For example, the touch sensors **1103** may be capacitive touch sensors, resistive touch sensors, acoustic wave sensors, or the like. The touch sensors **1103** may include any suitable components for detecting touch-based inputs and generating signals or data that are able to be accessed using processor instructions, including electrodes (e.g., electrode layers), physical components (e.g., substrates, spacing layers, structural supports, compressible elements, etc.) processors, cir-

cuitry, firmware, and the like. The touch sensors **1103** may be integrated with or otherwise configured to detect touch inputs applied to any portion of the device **1100**. For example, the touch sensors **1103** may be configured to detect touch inputs applied to any portion of the device **1100** that includes a display (and may be integrated with a display). For example, the touch sensors **1103** may be configured to detect touch inputs applied to front and/or side surfaces of a shell. The touch sensors **1103** may operate in conjunction with the force sensors **1105** to generate signals or data in response to touch inputs. A touch sensor or force sensor that is positioned over a display or otherwise integrated with a display may be referred to herein as a touch-sensitive display, force-sensitive display, or touchscreen.

[0125] The force sensors **1105** may detect various types of force-based inputs and generate signals or data that are able to be accessed using processor instructions. The force sensors **1105** may use any suitable components and may rely on any suitable phenomena to detect physical inputs. For example, the force sensors **1105** may be strain-based sensors, piezoelectric-based sensors, piezoresistive-based sensors, capacitive sensors, resistive sensors, or the like. The force sensors **1105** may include any suitable components for detecting force-based inputs and generating signals or data that are able to be accessed using processor instructions, including electrodes (e.g., electrode layers), physical components (e.g., substrates, spacing layers, structural supports, compressible elements, etc.) processors, circuitry, firmware, and the like. The force sensors **1105** may be used in conjunction with various input mechanisms to detect various types of inputs. For example, the force sensors **1105** may be used to detect presses or other force inputs that satisfy a force threshold (which may represent a more forceful input than is typical for a standard "touch" input). Like the touch sensors **1103**, the force sensors **1105** may be integrated with or otherwise configured to detect force inputs applied to any portion of the device **1100**. As a specific example, force sensors **1105** may be configured to detect force inputs applied to the front and/or side surfaces of a shell. The force sensors **1105** may be configured to detect force inputs applied to portions of the device **1100** that include a display (and may be integrated with the display). The force sensors **1105** may operate in conjunction with the touch sensors **1103** to generate signals or data in response to touch- and/or force-based inputs.

[0126] The device **1100** may also include one or more haptic feedback devices **1106** (also referred to simply as haptic devices **1106**). The haptic device **1106** may include one or more of a variety of haptic technologies such as, but not necessarily limited to, rotational haptic devices, linear actuators, piezoelectric devices, vibration elements, and so on. In general, the haptic device **1106** may be configured to provide punctuated and distinct feedback to a user of the device. More particularly, the haptic device **1106** may be adapted to produce a knock or tap sensation and/or a vibration sensation. Such haptic outputs may be provided in response to detection of touch and/or force inputs, and may be imparted to a user through an exterior surface of the device **1100** (e.g., via front, side, and/or rear surfaces of a wearable device such as a watch).

[0127] The one or more communication channels **1104** may include one or more wireless interface(s) that are adapted to provide communication between the processing unit(s) **1101** and an external device. The one or more communication channels **1104** may include antennas, communications circuitry, firmware, software, or any other components or systems that facilitate wireless communications with other devices. In general, the one or more communication channels **1104** may be configured to transmit and receive data and/or signals that may be interpreted by instructions executed on the processing units **1101**. In some cases, the external device is part of an external communication network that is configured to exchange data with wireless devices. Generally, the wireless interface may communicate via, without limitation, radio frequency, optical, acoustic, and/or magnetic signals and may be configured to operate over a wireless interface or protocol. Example wireless interfaces include radio frequency cellular interfaces (e.g., 2G, 3G, 4G, 4G, 4G long-term evolution (LTE), 5G, GSM, CDMA, or the like), fiber optic interfaces, acoustic interfaces, Bluetooth interfaces, infrared interfaces, USB interfaces, Wi-Fi interfaces, TCP/IP interfaces, network communications interfaces, or any conventional communication interfaces.

[0128] As shown in FIG. **11**, the device **1100** may include a battery **1107** that is used to store and provide power to the other components of the device **1100**. The battery **1107** may be a rechargeable power supply that is configured to provide power to the device **1100**. The battery **1107** may be coupled to charging systems (e.g., wired and/or wireless charging systems) and/or other circuitry to control the electrical power provided to the battery **1107** and to control the electrical power provided from the battery **1107** to the device **1100**.

[0129] The device **1100** may also include one or more displays **1108** configured to display graphical outputs. The displays **1108** may use any suitable display technology, including liquid crystal displays (LCD), organic light emitting diodes (OLED), active-matrix organic light-emitting diode displays (AMOLED), or the like. The displays **1108** may display graphical user interfaces, images, icons, or any other suitable graphical outputs. The one or more displays **1108** may include displays that are configured to display graphical outputs that are visible through the front and/or side walls of a device. The one or more displays **1108** may correspond to the display **114**, the display **402**, or any other displays described herein.

[0130] The device **1100** may also provide audio input functionality via one or more audio input systems **1109**. The audio input systems **1109** may include microphones, transducers, or other devices that capture sound for voice calls, video calls, audio recordings, video recordings, voice commands, and the like.

[0131] The device **1100** may also provide audio output functionality via one or more audio output systems (e.g., speakers) **1110**. The audio output systems **1110** may produce sound from voice calls, video calls, streaming or local audio content, streaming or local video content, alerts or notifications, or the like.

[0132] The device **1100** may also include a positioning system **1111**. The positioning system **1111** may be configured to determine the location of the device **1100**. For example, the positioning system **1111** may include magnetometers, gyroscopes, accelerometers, optical sensors, cameras, global positioning system (GPS) receivers, inertial positioning systems, or the like. The positioning system **1111** may be used to determine spatial parameters of the device **1100**, such as the location of the device **1100** (e.g., geo-

graphical coordinates of the device), measurements or estimates of physical movement of the device **1100**, an orientation of the device **1100**, or the like.

[0133] The device **1100** may also include one or more additional sensors **1112** to receive inputs (e.g., from a user or another computer, device, system, network, etc.) or to detect any suitable property or parameter of the device, the environment surrounding the device, people or things interacting with the device (or nearby the device), or the like. For example, a device may include temperature sensors, biometric sensors (e.g., fingerprint sensors, photoplethysmographs, blood-oxygen sensors, blood sugar sensors, electrocardiograph sensors, or the like), eye-tracking sensors, retinal scanners, humidity sensors, buttons, switches, or the like.

[0134] To the extent that multiple functionalities, operations, and structures described with reference to FIG. **11** are disclosed as being part of, incorporated into, or performed by the device **1100**, it should be understood that various embodiments may omit any or all such described functionalities, operations, and structures. Thus, different embodiments of the device **1100** may have some, none, or all of the various capabilities, apparatuses, physical features, modes, and operating parameters discussed herein. Further, the systems included in the device **1100** are not exclusive, and the device **1100** may include alternative or additional systems, components, modules, programs, instructions, or the like, that may be necessary or useful to perform the functions described herein.

[0135] The foregoing description, for purposes of explanation, used specific nomenclature to provide a thorough understanding of the described embodiments. However, it will be apparent to one skilled in the art that the specific details are not required in order to practice the described embodiments. Thus, the foregoing descriptions of the specific embodiments described herein are presented for purposes of illustration and description. They are not targeted to be exhaustive or to limit the embodiments to the precise forms disclosed. It will be apparent to one of ordinary skill in the art that many modifications and variations are possible in view of the above teachings. Also, when used herein to refer to positions of components, the terms above, below, over, under, left, or right (or other similar relative position terms), do not necessarily refer to an absolute position relative to an external reference, but instead refer to the relative position of components within the figure being referred to.

[0136] As used herein, the phrase "at least one of" preceding a series of items, with the term "and" or "or" to separate any of the items, modifies the list as a whole, rather than each member of the list. The phrase "at least one of" does not require selection of at least one of each item listed; rather, the phrase allows a meaning that includes at a minimum one of any of the items, and/or at a minimum one of any combination of the items, and/or at a minimum one of each of the items. By way of example, the phrases "at least one of A, B, and C" or "at least one of A, B, or C" each refer to only A, only B, or only C; any combination of A, B, and C; and/or one or more of each of A, B, and C. Similarly, it may be appreciated that an order of elements presented for a conjunctive or disjunctive list provided herein should not be construed as limiting the disclosure to only that order provided.

What is claimed is:

1. A wearable electronic device comprising:
a display;
a housing comprising:
a chassis defining:
a first portion of a rear exterior surface of the wearable electronic device; and
a first portion of a side exterior surface of the wearable electronic device; and
a glass shell defining:
a front wall positioned over the display and defining a front exterior surface of the wearable electronic device; and
a side wall extending from the front wall and defining a second portion of the side exterior surface of the wearable electronic device; and
a touch sensing system within the housing and configured to detect a touch input applied to the front exterior surface of the wearable electronic device.

2. The wearable electronic device of claim **1**, wherein:
the chassis further defines an internal wall;
a portion of the side wall overlaps the internal wall and defines a concave interior surface; and
the wearable electronic device further comprises an adhesive bonding the concave interior surface to the internal wall.

3. The wearable electronic device of claim **2**, wherein:
the adhesive defines an undercut region; and
the concave interior surface of the glass shell mechanically interlocks with the undercut region of the adhesive to secure the glass shell to the chassis.

4. The wearable electronic device of claim **3**, wherein the glass shell is secured to the chassis at least in part via a chemical bond between the concave interior surface and the adhesive.

5. The wearable electronic device of claim **2**, further comprising a compliant member within the housing and in contact with the internal wall and the side wall, the compliant member defining a seal between the internal wall and the side wall.

6. The wearable electronic device of claim **2**, wherein the second portion of the side exterior surface of the wearable electronic device extends more than half of a distance from the front exterior surface of the wearable electronic device to the rear exterior surface of the wearable electronic device.

7. The wearable electronic device of claim **2**, wherein:
the front wall further defines a front interior surface of the wearable electronic device;
the wearable electronic device further comprises an opaque mask material on a portion of the concave interior surface and on a portion of the front interior surface; and
the opaque mask material defines a border around an active area of the display.

8. The wearable electronic device of claim **2**, wherein the display defines:
a first portion configured to display first graphical outputs through the front wall; and
a second portion configured to display second graphical outputs through the side wall.

9. A watch comprising:
a display;
a capacitive touch-sensing system; and

a housing surrounding the display and the capacitive touch-sensing system and comprising:
a glass shell defining:
a front wall defining a front surface of the watch;
a first pair of side walls having a first length and defining a first pair of side surfaces of the watch; and
a second pair of side walls having a second length greater than the first length and defining a second pair of side surfaces of the watch; and
a chassis defining:
at least a portion of a rear surface of the watch; and
a watch band engagement feature; and
a watch band coupled to the watch band engagement feature.

10. The watch of claim **9**, wherein:
the chassis is formed from metal and defines:
a rear wall defining the portion of the rear surface of the watch; and
a hole extending through the rear wall; and
the watch further comprises:
a sensor cover positioned at least partially in the hole and defining an additional portion of the rear surface of the watch; and
a sensor system configured to detect a biological parameter of a user through the sensor cover.

11. The watch of claim **9**, wherein:
the chassis defines an internal wall; and
a first portion of the internal wall overlaps a first portion of one of the side walls of the second pair of side walls.

12. The watch of claim **11**, further comprising an adhesive positioned in a gap defined between the first portion of the internal wall and the first portion of the side wall of the second pair of side walls.

13. The watch of claim **9**, wherein the watch band engagement feature includes a slot formed in the chassis.

14. The watch of claim **9**, wherein the display is configured to display graphical outputs visible through the front wall and through at least one side wall of the second pair of side walls.

15. A wearable electronic device comprising:
a housing comprising:
a chassis defining:
a rear wall defining a first portion of a rear exterior surface of the wearable electronic device; and
a hole extending through the rear wall;
a glass shell defining:
a front wall defining a front surface of the wearable electronic device; and
four side walls extending from the front wall, each of the four side walls defining a portion of a respective side surface of the wearable electronic device; and
a sensor cover covering the hole and defining a second portion of the rear exterior surface of the wearable electronic device;
a display within the housing; and
a biometric sensor system within the housing and configured to detect a biological parameter of a user.

16. The wearable electronic device of claim **15**, wherein the biometric sensor system comprises:
an optical emitter configured to emit light through a first transparent portion of the sensor cover; and
an optical sensor configured to detect, through a second transparent portion of the sensor cover, a portion of the light that is reflected by a portion of the user's body.

17. The wearable electronic device of claim **16**, wherein the sensor cover comprises:
a monolithic structure formed from a transparent material;
a masked region defining an opaque region of the sensor cover;
a first unmasked region defining the first transparent portion of the sensor cover; and
a second unmasked region defining the second transparent portion of the sensor cover.

18. The wearable electronic device of claim **15**, further comprising an electrode coupled to the sensor cover and defining a third portion of the rear exterior surface of the wearable electronic device.

19. The wearable electronic device of claim **18**, wherein:
the electrode is a first electrode configured to measure a first voltage;
the wearable electronic device further comprises a second electrode along an exterior surface of the wearable electronic device and configured to measure a second voltage; and
the wearable electronic device is configured to determine an electrocardiogram using the first voltage and the second voltage.

20. The wearable electronic device of claim **19**, wherein the second electrode is positioned along one of the side walls of the four side walls.

* * * * *