US 20210377426A1

(19) United States

(12) Patent Application Publication

TADANO et al.

(10) Pub. No.: US 2021/0377426 A1

(43) Pub. Date: Dec. 2, 2021

(54) **CAMERA UNIT**

(71) Applicant: **Sony Interactive Entertainment Inc.**, Tokyo (JP)

(72) Inventors: **Katsuhisa TADANO**, Kanagawa (JP); **Naoki OGISHITA**, San Mateo, CA (US); **Nozomu UCHIDA**, Tokyo (JP); **Kenta KIDOBA**, Kanagawa (JP)

(73) Assignee: **Sony Interactive Entertainment Inc.**, Tokyo (JP)

(21) Appl. No.: **17/321,951**

(22) Filed: **May 17, 2021**

Related U.S. Application Data

(60) Provisional application No. 63/031,622, filed on May 29, 2020.

Publication Classification

(51) **Int. Cl.**
H04N 5/225 (2006.01)
G03B 17/56 (2006.01)

(52) **U.S. Cl.**
CPC *H04N 5/2252* (2013.01); *G03B 17/561* (2013.01)

(57) **ABSTRACT**

Disclosed herein is a camera unit including a camera main body, and a stand configured to support the camera main body, in which the camera main body includes a light receiving section and a main body housing in which the light receiving section is accommodated, the stand includes a first arm portion configured to support the main body housing for pivotal motion such that an orientation in an upward and downward direction of an optical axis of the light receiving section is adjustable, and a second arm portion attached for pivotal motion to the first arm portion, and the main body hosing has a protrusion that projects downwardly at a lower portion of the camera unit in a use state of the camera unit.

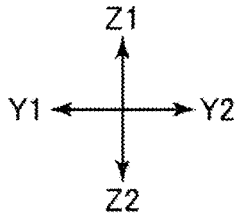

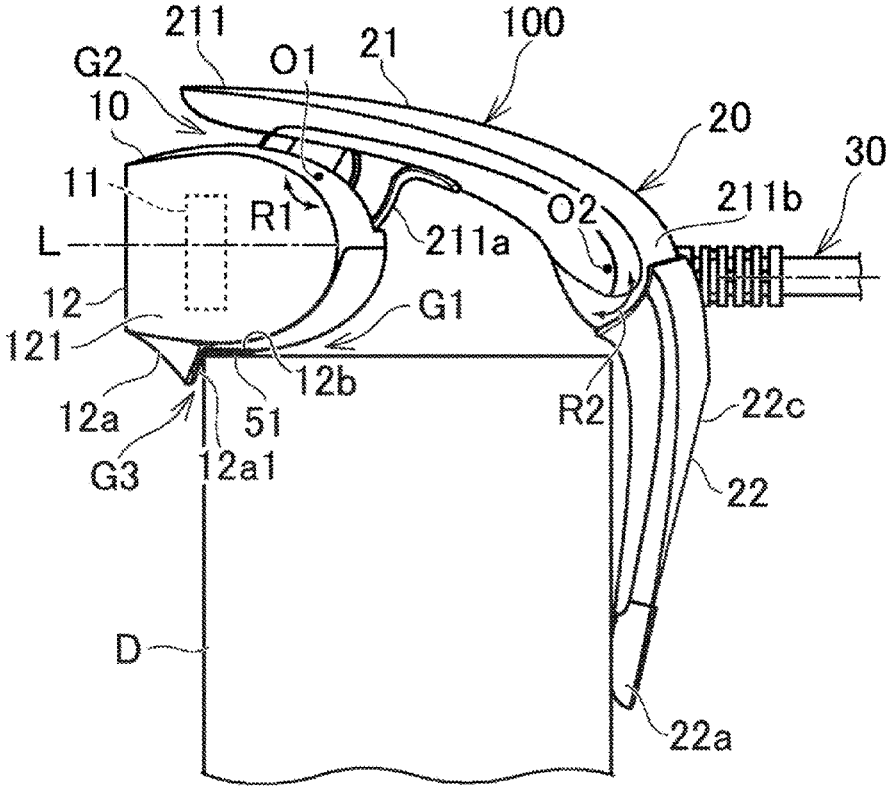

FIG. 1

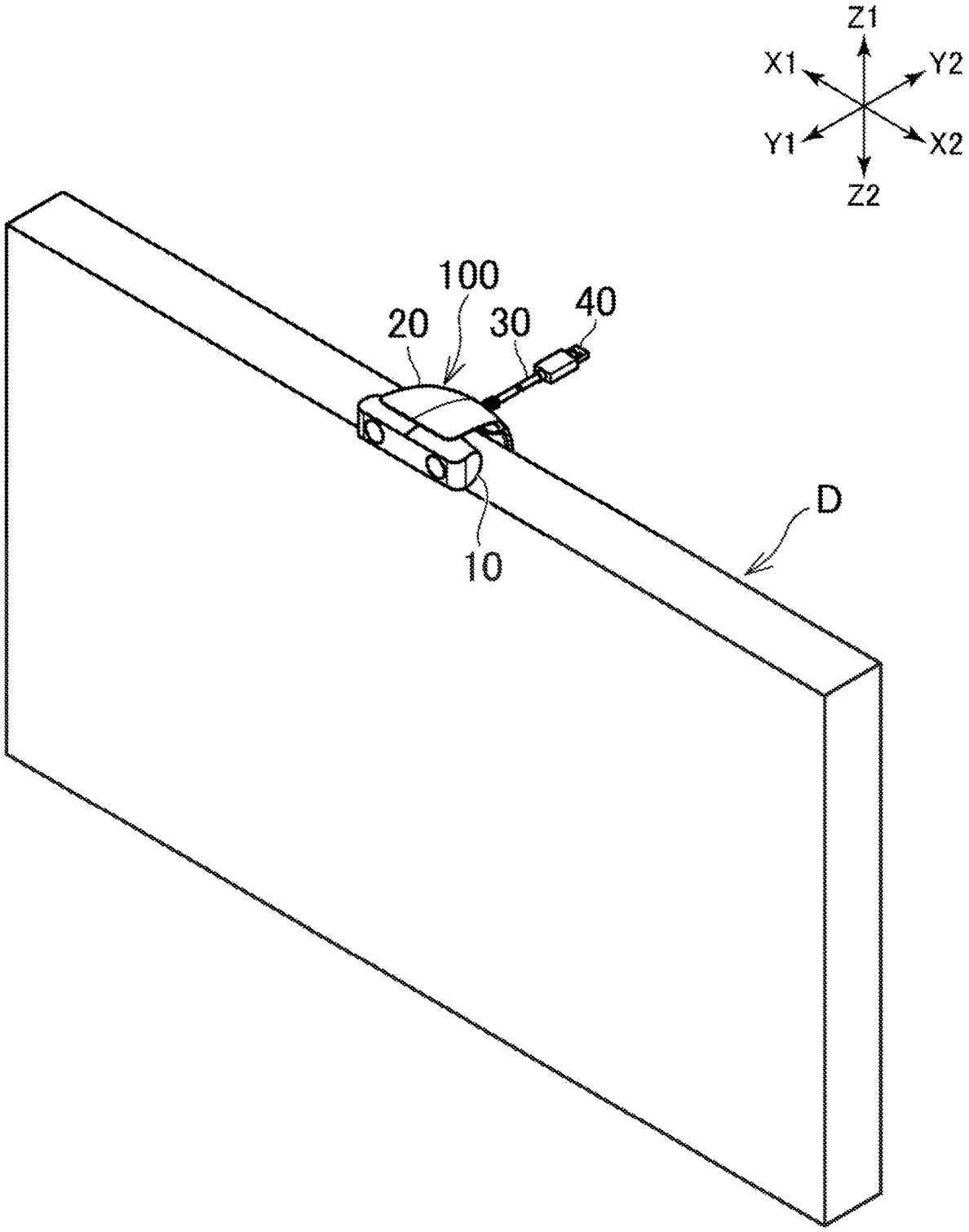

FIG. 2

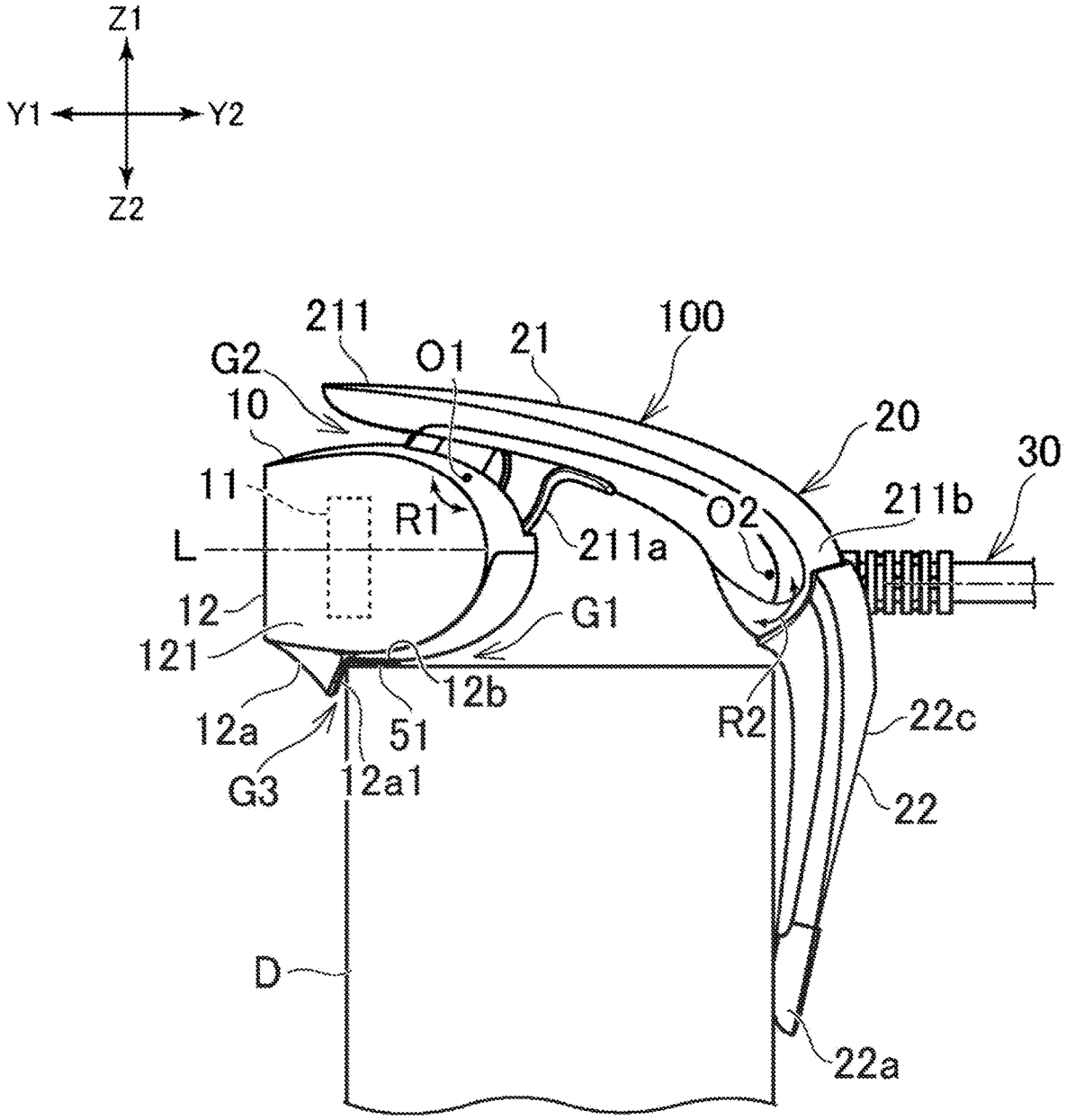
Z1
Y1
Y2
Z2
211
100
G2
O1
21
10
20
30
11
R1
O2
211b
L
211a
12
G1
121
12b
R2
22c
12a
51
G3
12a1
22
D
22a

FIG. 3

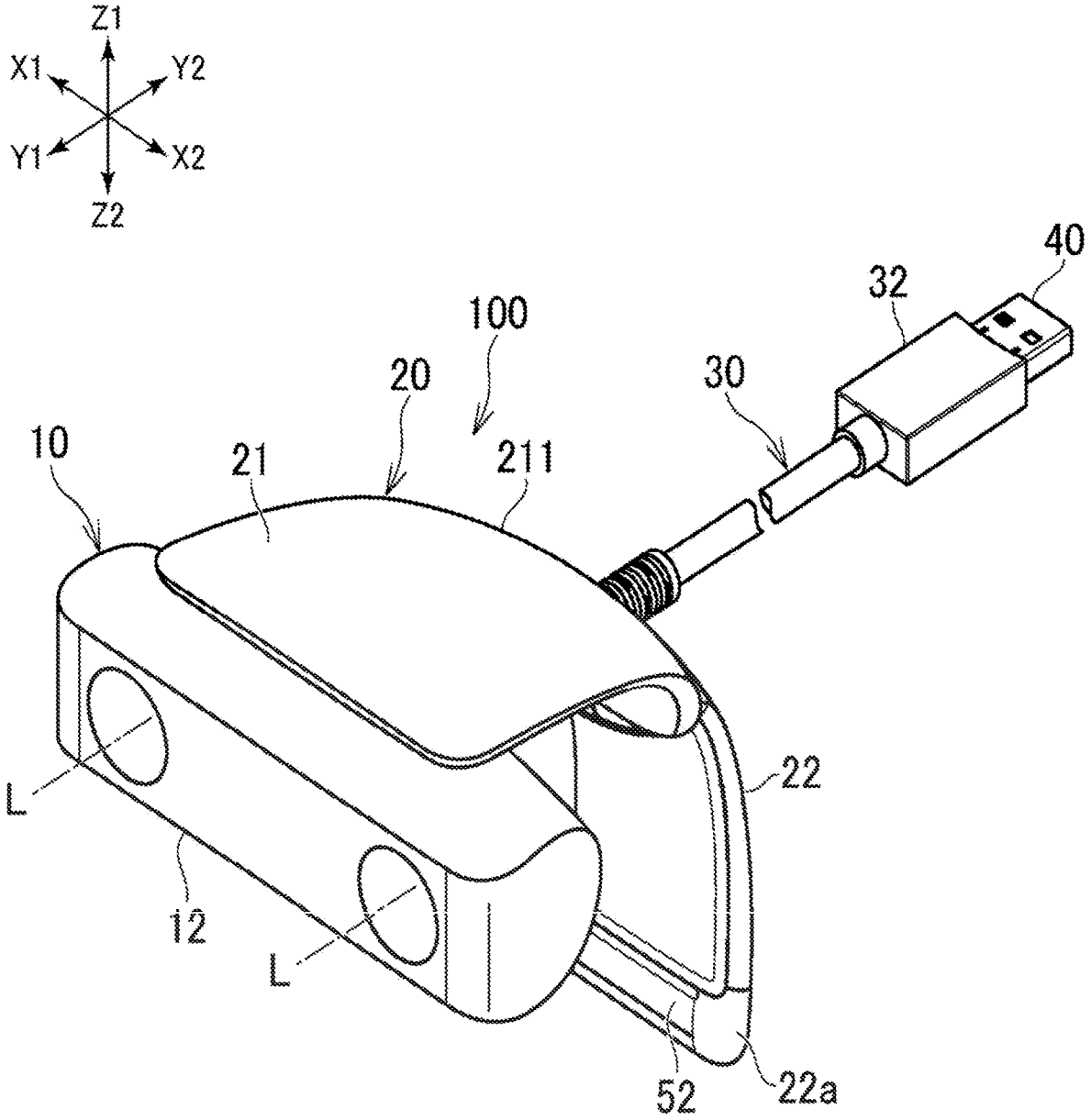

FIG. 4

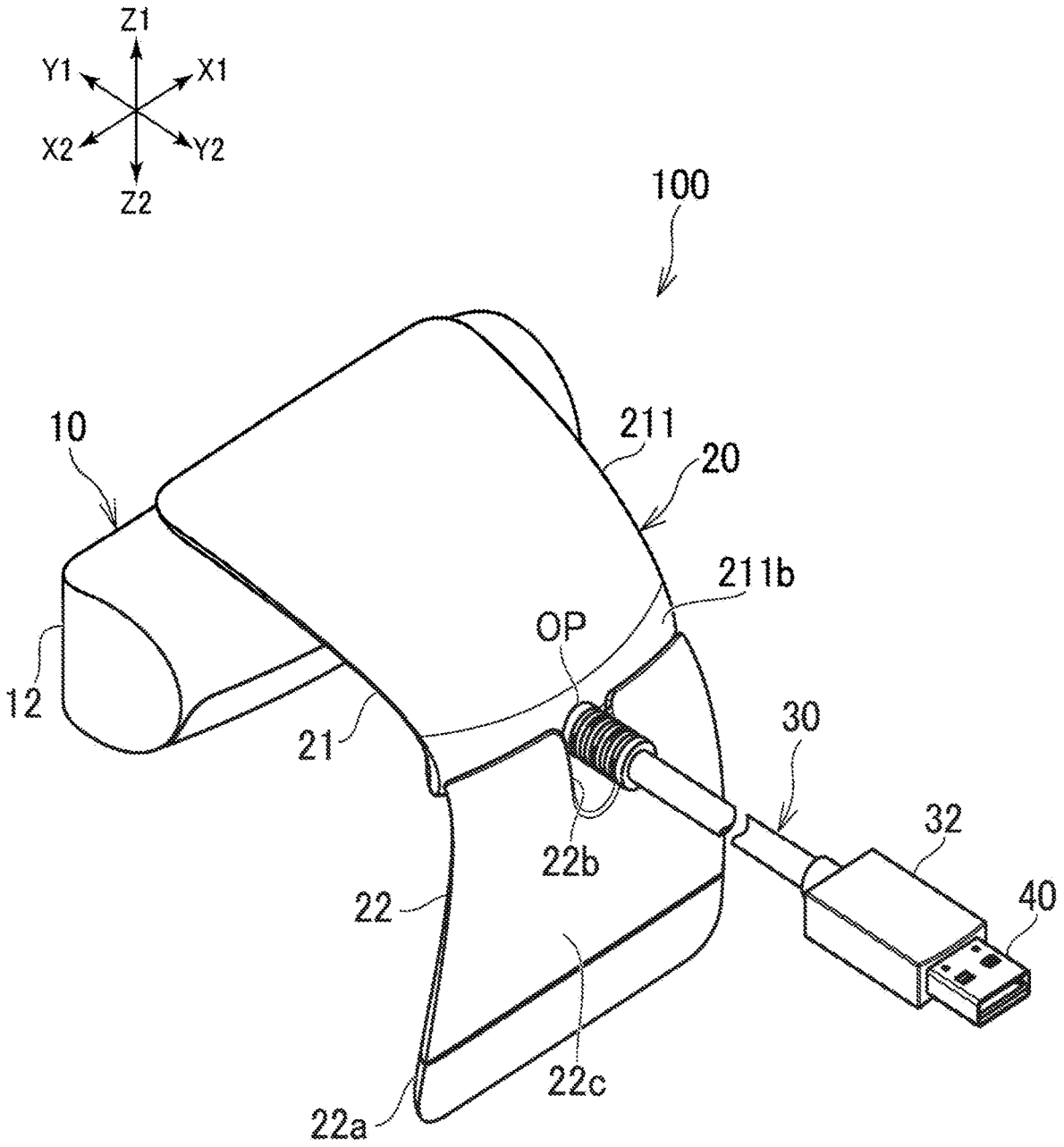

FIG. 5

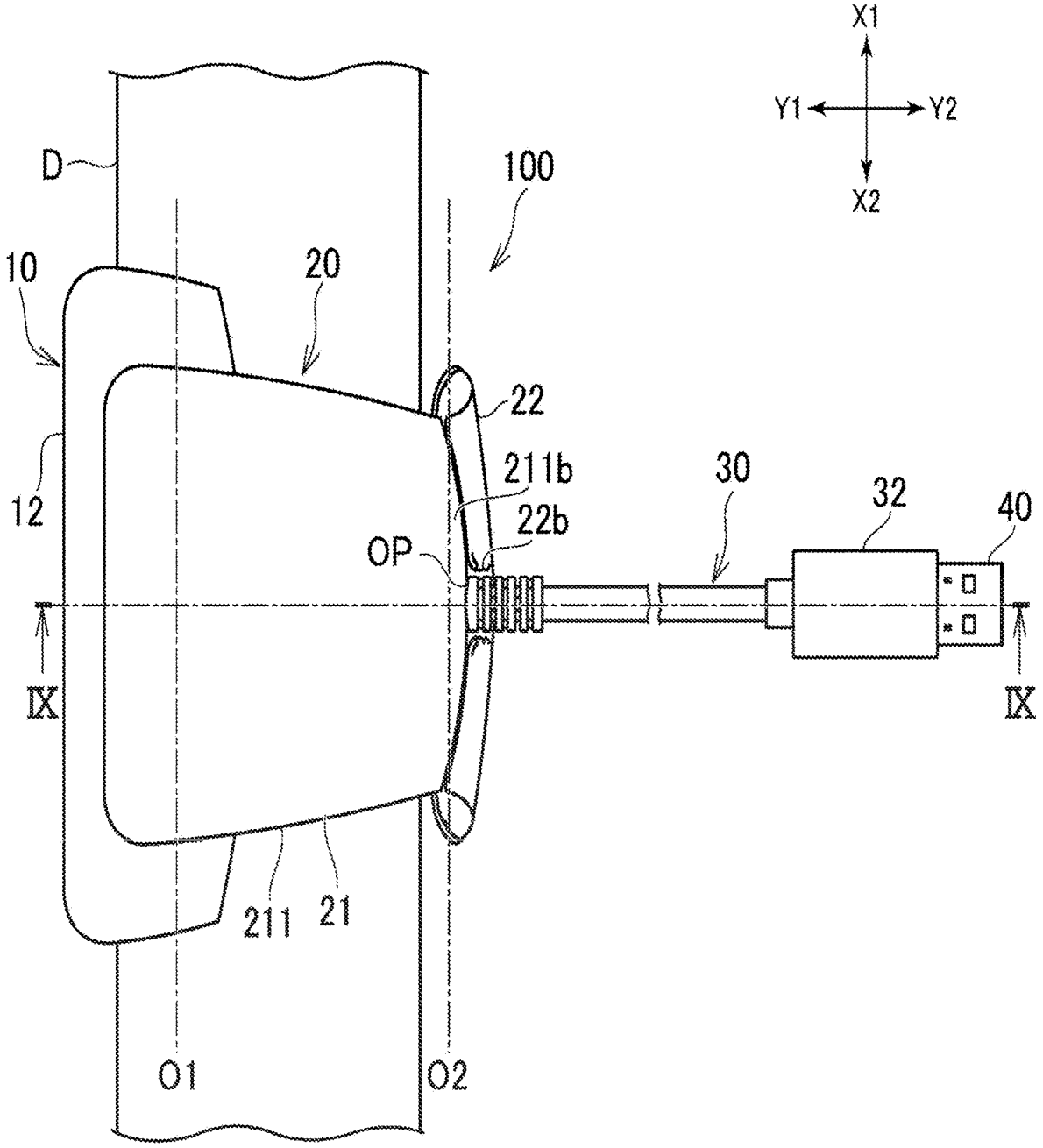

FIG. 6

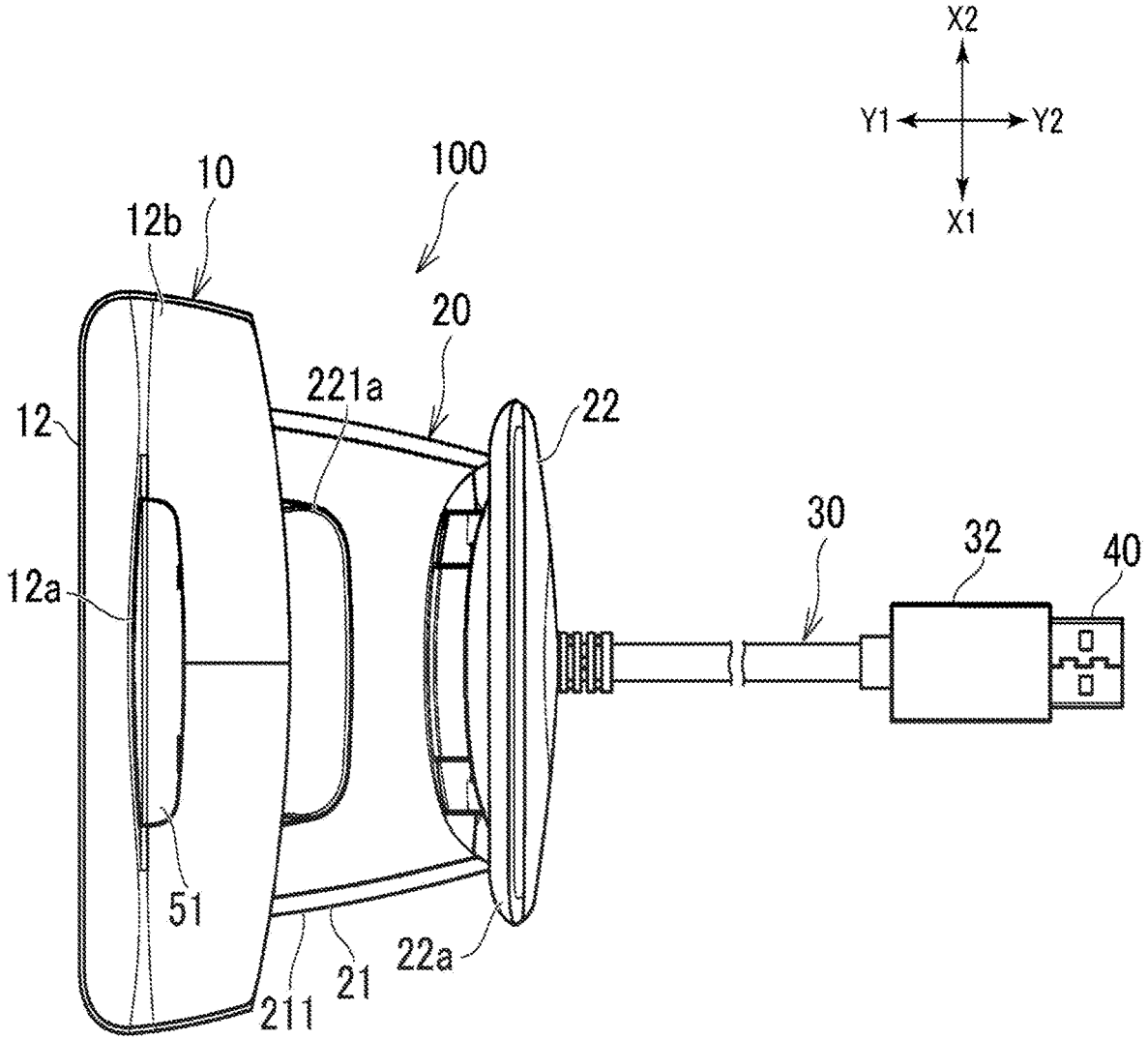

FIG. 7

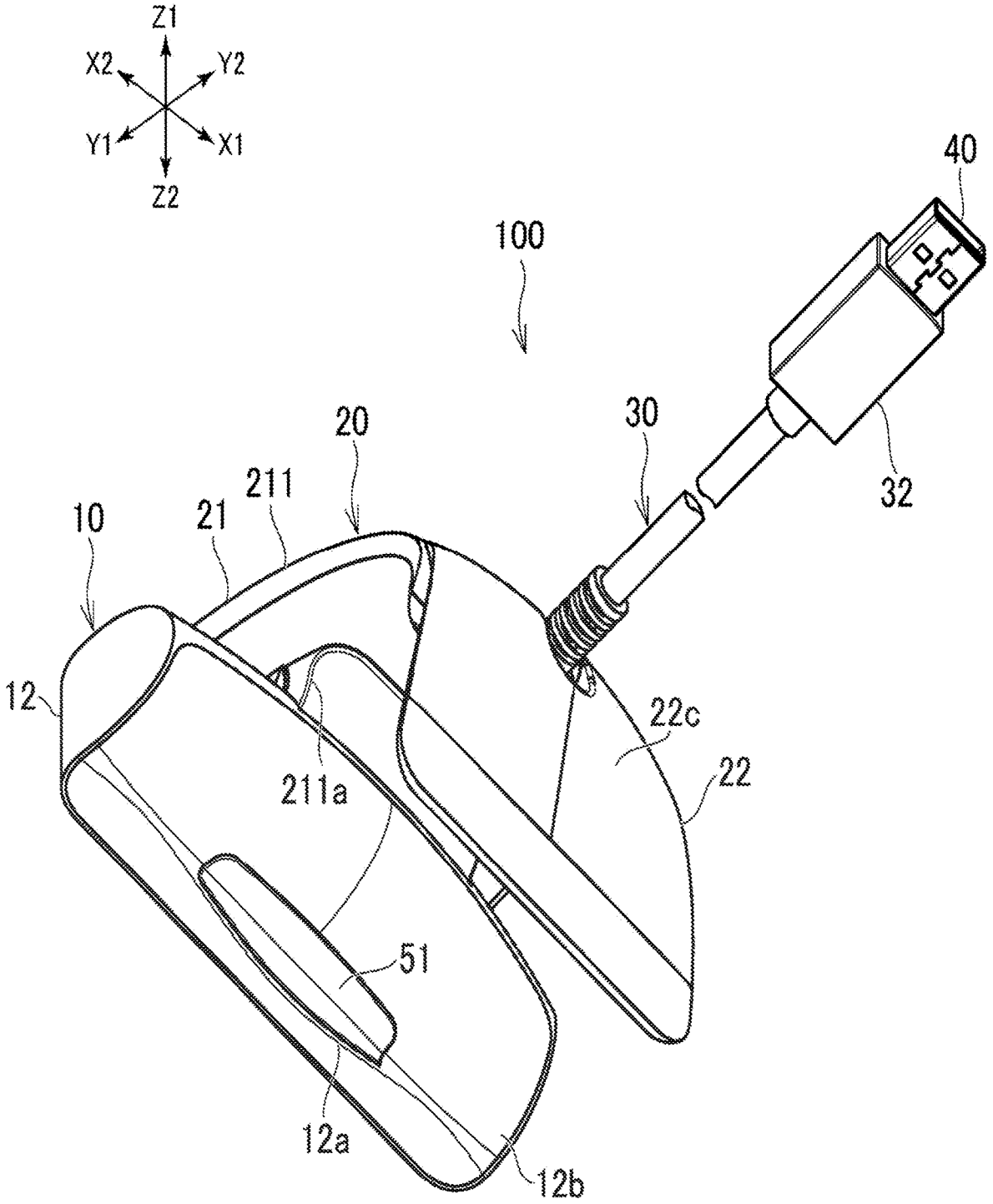

FIG. 8

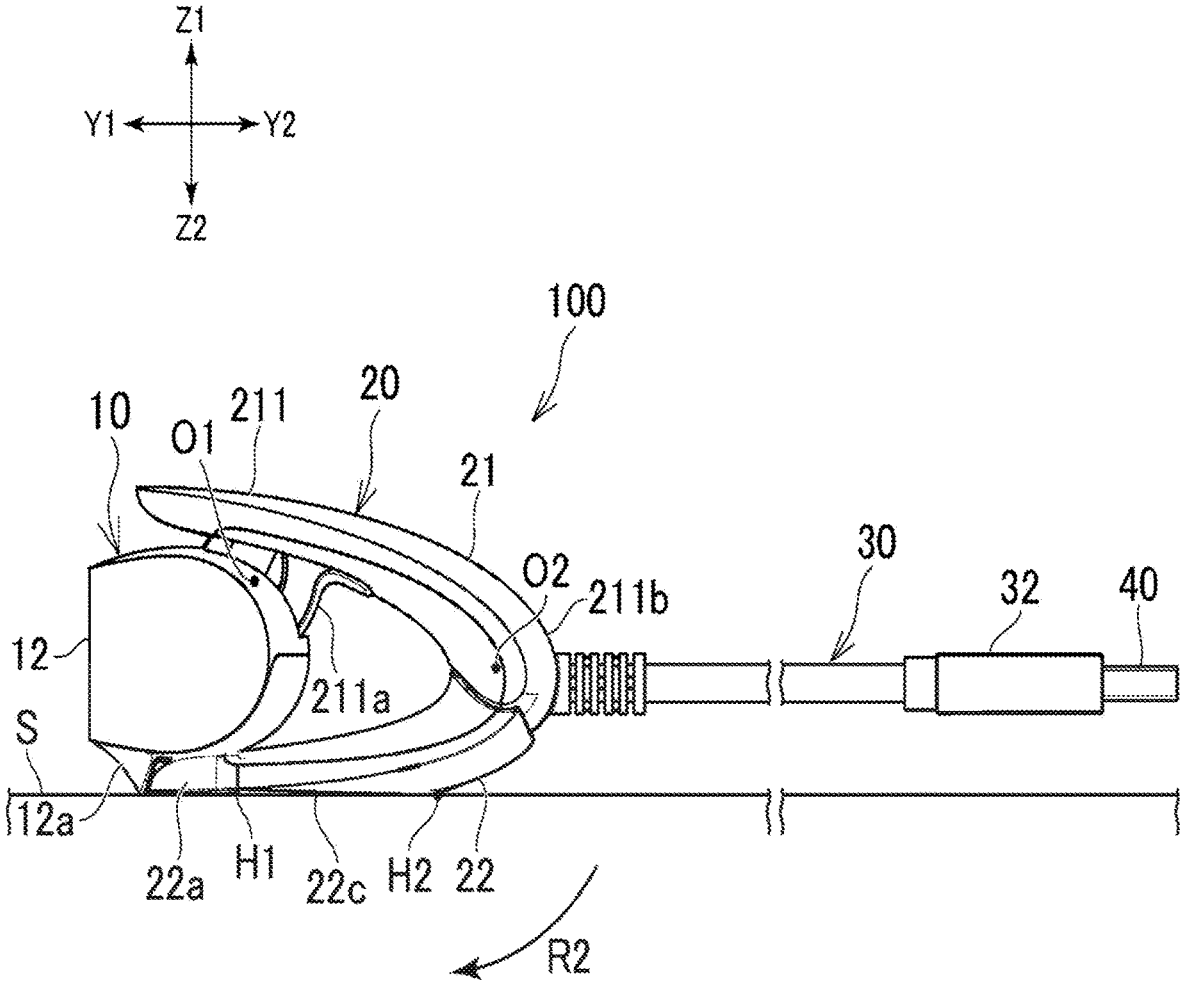
Z1
Y1
Y2
Z2
100
10
O1
211
20
21
O2
211b
30
32
40
12
211a
S
12a
22a
H1
22c
H2
22
R2

FIG. 9

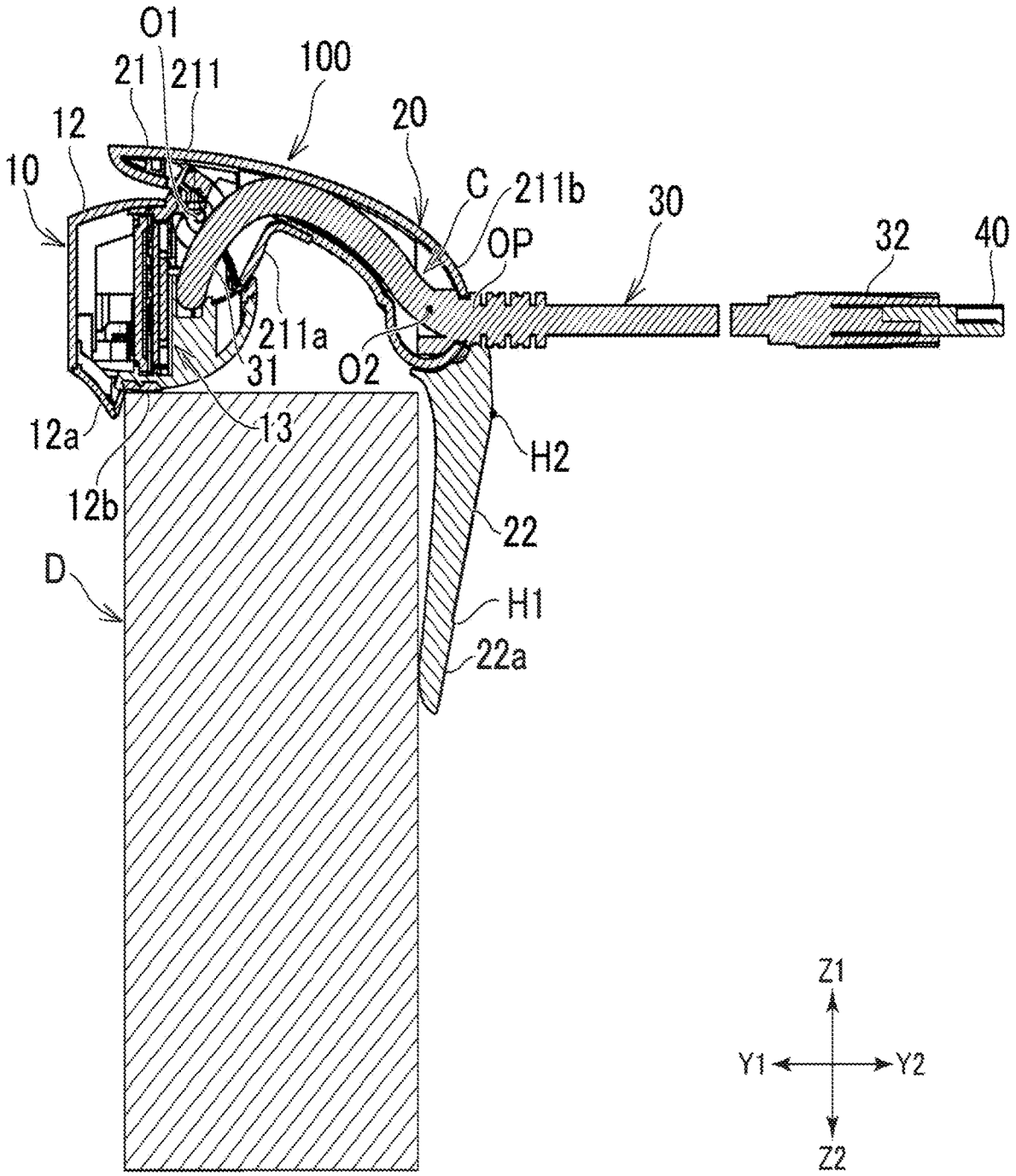
O1
21
211
100
12
20
10
C
211b
30
OP
32
40
211a
31
O2
12a
13
H2
12b
22
D
H1
22a
Z1
Y1
Y2
Z2

FIG. 10

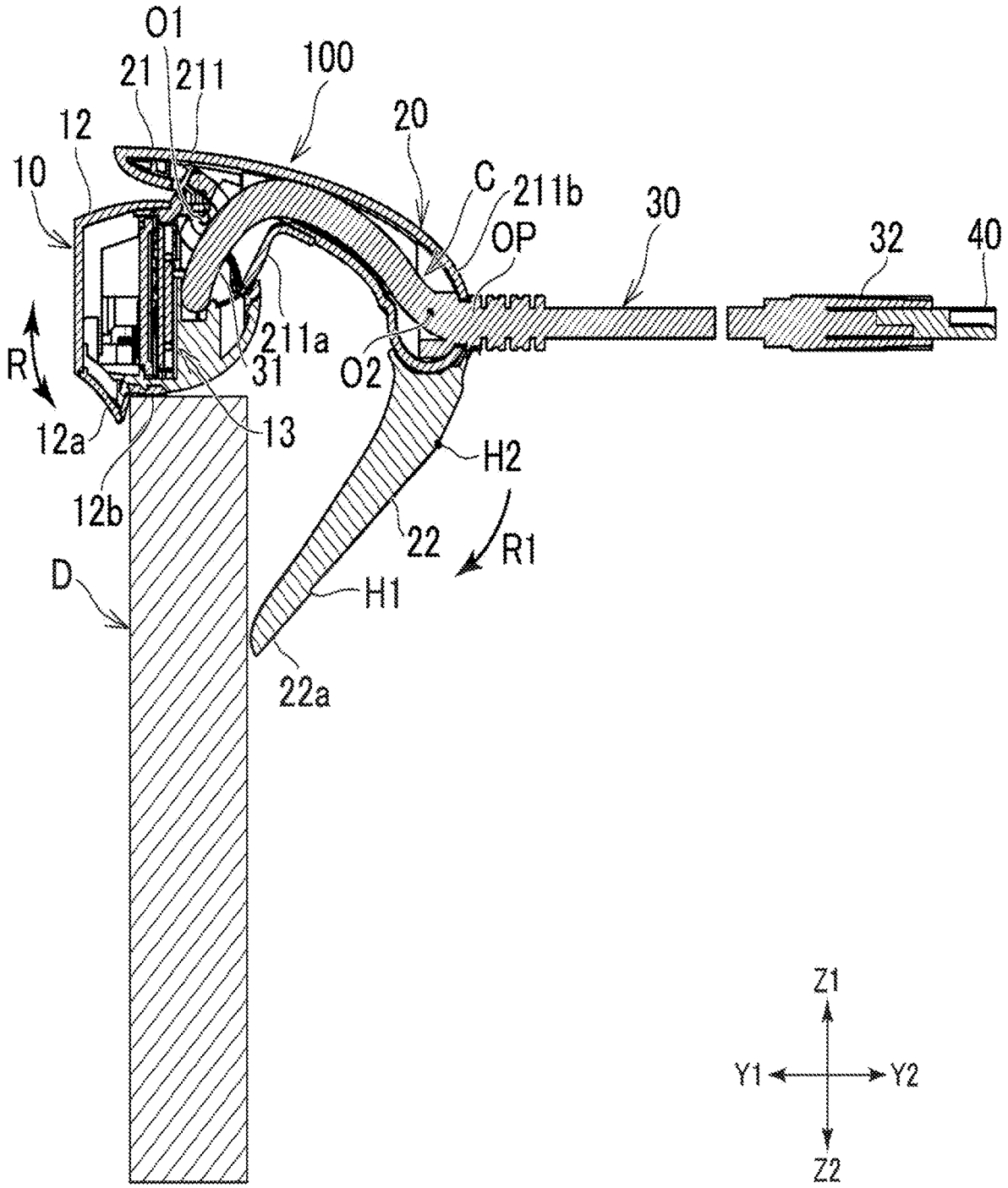
O1
21
211
100
12
20
10
C
211b
30
OP
32
40
R
211a
31
O2
12a
13
H2
12b
22
R1
D
H1
22a
Z1
Y1
Y2
Z2

CAMERA UNIT

BACKGROUND

[0001] The present disclosure relates to a camera unit that is attached to an upper edge of a display device.

[0002] JP 2018-10117A discloses a camera unit that includes a camera and a stand and that is attached to an upper edge of a display device (for example, a television set or a display of a personal computer). The camera unit disclosed in Patent Document 1 adopts a structure that has three centers of rotation provided for mounting of the camera unit on a display device and for adjustment of the orientation of the camera.

SUMMARY

[0003] Such a camera unit as described above preferably has a more simplified configuration with which it can be attached to a display device.

[0004] It is desirable to provide a camera unit that has a simplified configuration with which it can be attached to a display device.

[0005] A camera unit for solving the problem described above includes a camera main body, and a stand configured to support the camera main body, in which the camera main body includes a light receiving section and a main body housing in which the light receiving section is accommodated, the stand includes a first arm portion configured to support the main body housing for pivotal motion such that an orientation in an upward and downward direction of an optical axis of the light receiving section is adjustable, and a second arm portion attached for pivotal motion to the first arm portion, and the main body hosing has a protrusion that projects downwardly at a lower portion of the camera unit in a use state of the camera unit.

BRIEF DESCRIPTION OF THE DRAWINGS

[0006] FIG. **1** is a perspective view depicting a state in which a camera unit according to an embodiment of the present disclosure is attached to an upper end of a display device;

[0007] FIG. **2** is a side elevational view depicting a state in which the camera unit according to t e present embodiment is attached to the upper edge of the display device;

[0008] FIG. **3** is a perspective view of the camera unit according to the present embodiment as viewed obliquely from above and front;

[0009] FIG. **4** is a perspective view of the camera unit according to the present embodiment as viewed obliquely from above and rear;

[0010] FIG. **5** is a top plan view depicting a state in which the camera unit according to the present embodiment is attached to the upper edge of the display device;

[0011] FIG. **6** is a bottom plan view of the camera unit according to the present embodiment as viewed from below;

[0012] FIG. **7** is a perspective view of the camera unit according to the present embodiment as viewed obliquely from rear and below;

[0013] FIG. **8** is a side elevational view depicting a state in which a second arm portion is positioned in a closed position in the camera unit according to the present embodiment;

[0014] FIG. **9** is a sectional view depicting a cut face where the camera unit is cut along a IX-IX cut line of FIG. **5**; and

[0015] FIG. **10** is a sectional view depicting a state in which the camera unit is attached to a display device that is thinner than the display device depicted in FIG. **9**.

DETAILED DESCRIPTION OF THE PREFERRED EMBODIMENT

[0016] In the following, an embodiment of the present disclosure (hereinafter referred to as the present embodiment) is described with reference to the drawings.

[0017] FIG. **1** is a perspective view depicting a state in which a camera unit according to the present embodiment is attached to an upper end of a display device. FIG. **2** is a side elevational view depicting a state in which the camera unit according to the present embodiment is attached to the upper edge of the display device. FIG. is a perspective view of the camera unit according to the present embodiment as viewed obliquely from above and front. FIG. **4** is a perspective view of the camera unit according to the present embodiment as viewed obliquely from above and rear. FIG. **5** is a top plan view depicting a state in which the camera unit according to the present embodiment is attached to the upper edge of the display device. FIG. **6** is a bottom plan view of the camera unit according to the present embodiment as viewed from below. FIG. **7** is a perspective view of the camera unit according to the present embodiment as viewed obliquely from rear and below. FIG. **8** is a side elevational view depicting a state in which a second arm portion is positioned in a closed position in the camera unit according to the present embodiment. FIG. **9** is a sectional view depicting a cut face where the camera unit is cut along a TX-TX cut line of FIG. **5**. FIG. **10** is a sectional view depicting a state in which the camera unit is attached to a display device that is thinner than the display device depicted in FIG. **9**.

[0018] In the present specification, X**1** and X**2** indicated in FIG. **1** and so forth denote a rightward direction and a leftward direction, respectively, Y**1** and Y**2** denote a forward direction and a rearward direction, respectively and Z**1** and Z**2** denote an upward direction and a downward direction, respectively. The direction in which a light receiving section **11** hereinafter described is oriented, namely, the direction in which an optical axis L (refer to FIGS. **2** and **3**) of the light receiving section **11** extends, is the forward direction.

[0019] Further, a portion on the front side of each member described in the description of the present embodiment is referred to as a front portion, a portion on the rear side is referred to as a rear portion, a portion on the upper side is referred to as an upper portion, and a portion on the lower side is referred to as a lower portion. Further, a face on the front side of each member described in the description of the present embodiment is referred to as a front face, a face on the rear side is referred to as a rear face, a face on the upper side is referred to as an upper face, and a face on the lower side is referred to as a lower face.

[Overview of Camera Unit **100**]

[0020] As depicted in FIG. **1**, the camera unit **100** is attached to an upper edge of a display device (for example, a television set or a display of personal computer) D. In the

present specification, the state of the camera unit **100** attached to the upper edge of the display device D is referred to also as use state.

[0021] The camera unit **100** includes a camera main body **10**, a stand **20**, and a cable **30**. The camera unit **100** is connected to an information processing apparatus (not depicted) such as a game device or a personal computer through the cable **30** and transmits image data acquired by a light receiving section **11** provided on the camera main body **10** to the information processing apparatus. The information processing apparatus generates a three-dimensional image on the basis of the image data acquired by two light receiving sections **11** provided on the camera main body **10**. However, this is not restrictive, and one light receiving section **11** may be provided, and the image generated by the information processing apparatus a two-dimensional image.

[Camera Main Body **10**]

[0022] The camera main body **10** includes as depicted in FIGS. **2**, **9**, and other figures, the light receiving section **11**, main body housing **12** that configures an exterior of the camera main body **10**, and a circuit board **13** on which various electronic parts such as the light receiving section **11** are mounted.

[0023] The main body housing **12** accommodates in the inside thereof the light receiving section **11**, the circuit board **13**, and other components. The main body housing **12** is supported by the stand **20** such that the orientation of the light receiving section **11** (optical axis L) can be adjusted in an upward and downward direction.

[0024] The light receiving section **11** includes a lens module and a light receiving element and captures external light. The camera main body **10** includes two light receiving sections **11** positioned to be spaced from each other in a leftward and rightward direction. It is to be noted that the light receiving section **11** is schematically depicted in FIG. **2** and illustration of a detailed configuration thereof is omitted.

[0025] The main body housing **12** has, at a lower portion **121** thereof in a use state of the camera unit **100**, a lower face **12***b* that is to be placed on an upper face of the display device D. Further, the main body housing **12** has, at the lower portion **121** thereof in the use state of the camera unit **100**, a protrusion **12***a* that projects downwardly. The protrusion **12***a* projects, in the use state of the camera unit **100**, downwardly so as to be caught by a front face of the display device D in front of the lower face **12***b*.

[0026] It is to be noted that, though not depicted, it is sufficient if it includes a microphone accommodated in the main body housing **12**. Further, it is sufficient if the camera main body **10** transmits sound data acquired by the microphone to the information processing apparatus through the cable **30**.

[0027] The cable **30** is provided so as to be connected to the camera main body **10** and extend rearwardly. In particular, the cable **30** is electrically connected at a front end portion **31** thereof (refer to FIGS. **9** and **10**) to the circuit board **13** accommodated in the main body housing **12** of the camera main body **10**. Further, the cable **30** has a connector **40** provided at a rear end portion **32** thereof. Although the connector **40** is, for example, a USB (Universal Serial Bus) connector, it may otherwise be a connector of another type.

[Stand **20**]

[0028] The stand **20** includes a first arm portion **21** and a second arm portion **22**.

[0029] The first arm portion **21** includes an arm housing **211** that configures an exterior of the first arm portion **21**. The arm housing **211** has a support portion **211***a* that supports the main body housing **12** for pivotal motion provided thereon such that the orientation of the optical axis L of the light receiving section **11** in the upward and downward direction can be adjusted.

[0030] The support portion **211***a* supports the main body housing **12** for pivotal motion around a pivotal motion center O**1** extending in the leftward and rightward direction through a hinge (not depicted). The support portion **211***a* extends downwardly at a front portion of the first arm portion **21** and supports an upper portion of the main body housing **12** through the hinge. In particular, the support portion **211***a* is configured so as to suspend and support the main body housing **12**. It is sufficient if the hinge used here is a torque hinge that can hold the camera main body **10** at an optional position. By pivoting the camera main body **10** in an R**1** direction indicated in FIG. **2** around the pivotal motion center O**1**, the orientation of the optical axis L of the light receiving section **11** is adjusted. It is to be noted that, although the support portion **211***a* extending downwardly from the first arm portion **21** is indicated in the present. embodiment, this is not restrictive, and it is sufficient if a configuration in which at least an upper portion of the main body housing **12** is supported by the first arm portion **21** is adopted.

[0031] The second arm portion **22** is attached for pivotal motion to the first arm portion **21** such that the distance thereof to the camera main body **10** can be adjusted. In the present embodiment, the second arm portion **22** is attached at an end portion thereof to a rear portion of the first arm portion **21** for pivotal motion around a pivotal motion center O**2** extending to the leftward and rightward direction through a hinge (not depicted). It is sufficient if the hinge used here is a torque hinge that can hold the second arm portion **22** at an optional position. In the present embodiment, the pivotal motion center O**2** is disposed rearwardly and downwardly with respect to the pivotal motion center O**1**. It is to be noted that, although the pivotal motion center O**1** and the pivotal motion center O**2** do not physically appear on the appearance of the camera unit **100**, they are depicted in FIGS. **2** and **5** is order to facilitate movements of the associated portions.

[0032] The second arm portion **22** moves between a closed position and an open position by pivotally moving in an R**2** direction depicted in FIG. **2** around the pivotal motion center O**2**. The closed position is a position at which the second arm portion **22** is positioned in the proximity the camera main body **10**, and the open position is a position in which the second arm portion **22** is spaced away from the camera main body **10**. FIG. **2** depicts a state in which the second arm portion **22** is positioned at the open position. FIG. **8** depicts a state in which the second arm portion **22** is positioned at the closed position.

[0033] Further, as depicted in FIGS. **9** and **10**, part of the inside of the arm housing **211** of the first arm portion **21** forms a cavity C. In the cavity C, part of the cable **30** is accommodated. Further, as depicted in FIG. **4** and so forth, an opening OP is formed in the rear portion **211***b* of the arm housing **211** so as to be directed rearwardly. The cable **30**

extends rearwardly through the inside of the main body housing **12** and the first arm portion **21** and is exposed from the opening OP of the arm housing **211** and then extends rearwardly further. In particular, a portion of the cable **30** on the front side with respect to the opening OP is accommodated in the main body housing **12** and the arm housing **211** and cannot be viewed from the outside.

[0034] Further, as depicted in FIG. **4**, a cutout **22***b* is formed at the end portion of the second arm portion **22** such that the opening OP of the arm housing **211** and the second arm portion **22** do not overlap with each other. Consequently, the cable **30** is avoided from interfering with the second arm portion **22**.

[Use State of Camera Unit **100**]

[0035] The camera unit **100** is used in such a manner that the display device D is sandwiched in a forward and rearward direction the protrusion **12***a* provided on the main body housing **12** and a tip portion **22***a* of the second arm portion **22** as depicted in FIG. **2** and so forth.

[0036] The protrusion **12***a* is caught by a front face of the display device D in the use state. By such a configuration as just described, the camera unit **100** attached to the upper edge of the display device D is suppressed from being displaced rearwardly.

[0037] The protrusion **12***a* is provided at a front portion of the main body housing **12**. Therefore, in the use state, a portion of the main body housing **12** in the rear of the protrusion **12***a,* namely, the lower face **12***b* of the main body housing can be placed on the upper face of the display device D. Since the main body housing **12** can be placed directly on the upper face of the display device D in this manner, the posture of the camera unit **100** in the use state is stabilized. Further, since the main body housing **12** can be placed directly on the upper face of the display device D, the camera unit **100** can be used in a state in which the light receiving section **11** is positioned close to the screen of the display device D in the upward and downward direction. Therefore, a user who is in front of the display device D can be recognized easily by the camera.

[0038] In the use state, the second arm portion **22** contacts, at the tip portion **22***a* thereof, with a rear face of the display device D. Consequently, the camera unit **100** attached to the upper edge of the display device D is prevented from dropping rearwardly, and the posture of the camera unit **100** is stabilized.

[0039] In a use state, the second arm portion **22** takes the open position. It is sufficient if the open position of the second arm portion **22** is adjusted according to the width (thickness) of the display device D in the forward and rearward direction. FIG. **9** depicts a state in which the camera unit **100** is attached to the display device D that has a comparatively great width in the forward and rearward direction. When the camera unit **100** is attached to the display device D that has a comparatively great width in the forward and rearward direction, the open position of the second arm portion **22** is a position in which the portion **22***a* thereof is spaced by a comparatively great distance from the camera main body **10**.

[0040] FIG. **10** depicts a state in which the camera unit **100** is attached to the display device D that has a comparatively small width (thickness) the forward and rearward direction. When the camera unit **100** is attached to the display device D that has a comparatively small width in the forward and rearward direction, the open position of the second arm portion **22** is a position in which the tip portion **22***a* thereof is positioned comparatively closer to the camera main body **10**. In particular, the open position of the second arm portion **22** in a case where the camera unit **100** is attached to the display device D depicted in FIG. **10** is a position to which the second arm portion **22** is pivoted in an R**2** direction (a clockwise direction) indicated in FIG. **10** from that in a case where the camera unit **100** is attached to the display device D depicted in FIG. **9**.

[0041] It is to be noted that the camera unit **100** not only may be used in a state in which it is attached to an upper edge of a display device but also may be placed and used on a table S such as, for example, a television stand. In this case, it is sufficient if, as depicted in FIG. **8**, an outer face **22***c* of the second arm portion **22** (a lower face in the closed position) is placed on the table S in a state in which the second arm portion **22** is positioned at the closed position by pivoting the same in the R**2** direction (the clockwise direction depicted in FIG. **8**). It is to be noted that, in the present embodiment, the outer face **22***c* of the second arm portion **22** is shaped so as to include a rounded curved face from a design point of view. Further, the outer face **22***c* (lower face in the closed position) of the second arm portion **22** includes a first holding point H**1** for holding the posture of the second arm portion **22** and a curved face including a second holding point H**2** for holding the posture of second arm portion **22** in the rear with respect to the first holding point H**1** in a case where it is viewed from the leftward or rightward direction of the second arm portion **22** as depicted in FIGS. **8** to **10**. The first holding point H**1** and the second holding point H**2** are portions that contact with the table S. In this manner, it is sufficient if the camera unit **100** is configured such that the posture thereof is kept by the two holding points as viewed in side elevation in the use state in which the second arm portion **22** is positioned at the closed position. It is sufficient if the first holding point H**1** is a vertex of a protrusion that projects, for example, from part of the outer face **22***c*. Further, it is sufficient if the second holding point H**2** is part of a linear portion that extends in the leftward and rightward direction, for example, on the curved face of the second arm portion **22**. By such a configuration as described above, it is possible to adopt a curved face shape for the outer face **22***c* of the second arm portion **22** and bring the second arm portion **22** to the closed position to stabilize the posture of the camera unit **100** in the state in which the camera unit **100** is placed on the table S. It is to be noted that the shape of the outer face **22***c* of the second arm portion **22** is not limited to a shape that includes a curved face and may be a shape including a flat face. In this case, by placing the flat face formed on the outer face **22***c* of the second arm portion **22** on the table S, the posture of the camera unit **100** can be stabilized.

[Details of Other Configurations]

[0042] The lower face **12***b* of the main body housing is curved face that is inclined upwardly toward the rear. Therefore, in a state in which the camera unit **100** is attached to the display device such that the optical axis L of the light receiving section **11** extends in parallel to the upper face of the display device D, a gap G**1** is generated in the upward and downward direction between a lower portion of the main body housing **12** and the upper face of the display device D.

[0043] Further, as depicted in FIG. **2**, in a state in which the camera unit **100** is attached to the display device D in such a manner that the optical axis L of the light receiving section **11** extends in parallel to the upper face of the display device D, a gap G**2** is formed in the upward and downward direction between an upper portion of the main body housing **12** and a tip portion of the arm housing **211**. The gap G**2** is formed according to the length in the upward and downward direction of the support portion **211***a* that extends downwardly.

[0044] Pivotal motion of the camera main body **10** in clockwise direction in FIG. **2** is permitted according to each width of the gap G**1** and the gap G**2** in the upward and downward direction. In other words, it is permitted that the optical axis L of the light receiving section **11** is inclined in the upward direction in a state in which the camera unit **100** is attached to the display device D.

[0045] It is to be noted that, while the present embodiment is directed to an example in which the lower face **12***b* of the main body housing **12** includes a curved face, this is not restrictive, and the lower face **12***b* of the main body housing **12** may be configured so as to include a flat face that is inclined upwardly toward the rear. Also in such a structure as described, it is permitted that the optical axis P of the light receiving section **11** is inclined in the upward direction in a state in which the camera unit **100** is attached to the display device D.

[0046] Further, a rear face **12***a***1** of the protrusion **12***a* is inclined forwardly toward the downward. Therefore, in a state in which the camera unit **100** is attached to the display device D such that the optical axis L of the light receiving section **11** extends in parallel to the upper face of the display device D as depicted in FIG. **2**, a gap G**3** is formed in the forward and rearward direction between the protrusion **12***a* and a front face of the display device D. Pivotal motion of the camera main **10** in the counterclockwise direction in FIG. **2** is permitted according to the width of the gap G**3** in the forward and rearward direction. In other words, in the state in which the camera unit **100** is attached to the display device P, it is permitted that the optical axis of the light receiving section **11** is inclined in the downward direction.

[0047] Further, it is sufficient if the camera unit **100** has a slip-proof member for causing friction provided at a portion thereof at which to contact with the display device D. In particular, it is sufficient if a slip-proof member is provided on the lower face **12***b* of the main body housing **12** and an inner face of the tip portion **22***a* of the second arm portion **22**.

[0048] In the present embodiment, as depicted in FIGS. **2** and **7**, a slip-proof member **51** having a substantially L shape in side elevation view is provided over a range from the lower face **12***b* to the rear face **12***a***1** of the protrusion **12***a* of the main body housing **12**. Further, as depicted in FIG. **3**, a belt-like slip-proof member **52** is provided on the inner face of the tip portion **22***a* of the second arm portion **22** so as to extend in the leftward and rightward direction.

[0049] It is to be noted that it is sufficient if the slip-proof members **51** and **52** are made of, for example, an elastomer resin and formed by two-color molding on the main body housing **12** and the second arm portion **22**.

[0050] Further, it is sufficient if, as depicted in FIG. **8**, the second arm portion **22** has a length that does not cause, in the state in which it is positioned at the closed position, interference with an end of the protrusion **12***a* in its projection direction. Further, it is sufficient if the tip portion **22***a* of the second arm portion **22** is shaped so as to follow the shape of the rear face **12***a***1** of the protrusion **12***a* in the state in which the second arm portion **22** is in the closed position. In particular, it is sufficient if the front face of the portion **22***a* in the closed position is inclined downwardly toward the front. By adopting such a configuration as described, a length of the second arm portion **22** can be secured. Although various sizes are supposed for the width (thickness) of the display device D in the forward and rearward direction, by sufficiently securing the length of the second arm portion **22**, it is possible to attach the camera unit **100** to a greater number of types of the display device D. Further, by configuring the second arm portion **22** in such a way not to interfere with the tip of the protrusion **12***a* in the projection direction, namely, not to overlap with the protrusion **12***a* in the upward and downward direction, the size in the upward and downward direction of the camera unit **100** in the state in which the second arm portion **22** is positioned in the closed position can be minimized.

[0051] It is to be noted that it is sufficient if the protrusion **12***a* is formed symmetrically in the leftward and rightward direction with respect to an axis of symmetry at line that passes the center of the main body housing **12** in the leftward and rightward direction. For example, the protrusion **12***a* may be shaped so as to extend from a left end portion to a right end portion of the main body housing **12**. Alternatively, protrusions **12***a* may be formed in a spaced relationship from each other in the leftward and rightward direction at a left and portion and a right end portion of the main body housing **12**.

[Summary]

[0052] As described above, the camera unit **100** according to the present embodiment is configured such that it is attached to an upper edge of the display device D by sandwiching the display device D by protrusion **12***a* provided on the camera main body **10** and the tip portion **22***a* of the second arm portion **22**. Consequently, the configuration by which the camera unit **100** can be attached in a stable posture to the display device D and besides the orientation of the optical axis L of the light receiving section **11** can be adjusted can be implemented at two locations for pivotal motion (the pivotal motion center O**1** and the pivotal motion center O**2**). In other words, the camera unit **100** that is simple in configuration and that includes a small number of parts can be provided.

[0053] Further, as described hereinabove, the cable **30** is connected at the front end portion **31** thereof to the camera main body **10** and extends rearwardly from the camera main body **10** so as to be accommodated in the arm housing **211** of the first arm portion **21** and be exposed from the opening OP formed at the rear portion **211***b* of the arm housing **211**. By adopting such a configuration as described, in the state in which the camera unit **100** is attached to an upper edge of the display device D, the cable **30** does not interfere with the upper edge of the display device D. Therefore, the cable **30** is not affected by a load from the upper edge of the display device D. Further, since the cable **30** is exposed rearwardly from the rear face of the display device D, the visibility of the cable **30** drops and the appearance of the camera unit **100** is improved as viewed from a user who is in front of the display device to which the camera unit **100** is attached.

[0054] It should be understood by those skilled in the art that various modifications, combinations, sub-combinations and alterations may occur depending on design requirements and other factors insofar as they are within the scope of the appended claims or the equivalents thereof.

What is claimed is:

1. A camera unit comprising:

a camera main body; and

a stand configured to support the camera main body; wherein

the camera main body includes a light receiving section and a main body housing in which the light receiving section is accommodated,

the stand includes a first arm portion configured to support the main body housing for pivotal motion such that an orientation in an upward and downward direction of an optical axis of the light receiving section is adjustable, and a second arm portion attached for pivotal motion to the first arm portion, and

the main body hosing has a protrusion that projects downwardly at a lower portion of the camera unit in a use state of the camera unit.

2. The camera unit according to claim **1**, wherein

the first arm portion includes an arm housing having an opening at a rear portion thereof, and

the camera unit further comprises a cable that is electrically connected to a circuit board accommodated in the main body housing, that extends rearwardly passing the inside of the main body housing and the arm housing and that is exposed from the opening.

3. The camera unit according to claim **1**, wherein

the main body housing is supported for pivotal motion at an upper portion thereof by the first arm portion.

4. The camera unit according to claim **1**, wherein

the second arm portion is attached to the first arm portion for pivotal motion between a closed position at which the second arm portion is positioned close to the camera main body and an open position at which the second arm portion is spaced away from the camera main body.

5. The camera unit according to claim **4**, wherein

the protrusion is provided at a position at which the protrusion does not interfere with the second arm portion in a state in which the second arm portion is positioned at the closed position.

6. The camera unit according to claim **4**, wherein

a lower face of the second arm portion in the state in which the second arm portion is at the closed position includes a first holding point for holding a posture of the second arm portion and a curved face that includes a second holding point for holding a posture of the second arm portion in the rear with respect to the first holding point, as viewed from a leftward and rightward direction.

7. The camera unit according to claim **1**, wherein

a rear face of the protrusion is inclined forwardly toward the downward.

8. The camera unit according to claim **1**, wherein

a lower face of the main body housing is inclined upwardly toward the rear.

9. The camera unit according to claim **1**, wherein

the main body housing has a slip-proof member on a lower face thereof.

10. The camera unit according to claim **9**, wherein

the slip-proof member is provided over a range from the lower face of the main body housing to the rear face of the protrusion.

11. The camera unit according to claim **1**, wherein

slip-proof member is provided on an inner face of a tip portion of the second arm portion.

12. The camera unit according to claim **1**, wherein

the protrusion is provided projecting downwardly so as to be caught by a front face of a display device in the use state of the camera unit.

* * * * *