US 20040207530A1

(19) United States

(12) Patent Application Publication (10) Pub. No.: US 2004/0207530 A1

Nielsen (43) Pub. Date: Oct. 21, 2004

(54) ELIMINATION - ABSORBER MONITORING SYSTEM

(76) Inventor: **Wyn Y. Nielsen**, La Jolla, CA (US)

Correspondence Address:
DAVID A. LOWIN
P.O. BOX 620535
WOODSIDE, CA 94062-0535 (US)

(21) Appl. No.: **10/732,324**

(22) Filed: **Dec. 9, 2003**

Related U.S. Application Data

(63) Continuation of application No. PCT/US01/40912, filed on Jun. 11, 2001.

Publication Classification

(51) **Int. Cl.**[7] **G08B 21/00**

(52) **U.S. Cl.** **340/604**; 340/573.5

(57) **ABSTRACT**

An elimination-absorber monitoring system addresses diaper-monitoring problems with a unique, low cost, multi-layer disposable sensor structure that absorbs small volumes of urine, yet allows most urine volume to flow unimpeded through it, and into the diaper below. When connected with a reusable, miniature monitor/indicator unit, the sensor presents a clear and on-going change of measurement condition upon experiencing a rapid influx into the diaper of a significant volume of urine, and/or upon a significant reduction in the available absorbency of the diaper's top surface. The sensor additionally provides recessed, protected elements for similarly presenting a clear and on-going change in measurement condition upon experiencing the presence of fecal matter. Further provided is the monitor unit employing narrow, widely-spaced, fast rise-time, fast transition-time pulses for conductivity measurement and alarm activation. The monitor and sensor are interconnected and attached to a diaper by particularly effective and unique means, and the monitor is equipped with a highly intuitive and convenient control interface, as well as improved assemblies for the transmission of audible and visual alarm indications. Also described is a convenient test-strip device which, when connected to the monitor/alarm unit of the system, can selectively simulate either a soiled or unsoiled elimination-absorber/sensor for test, caregiver-training or demonstration purposes.

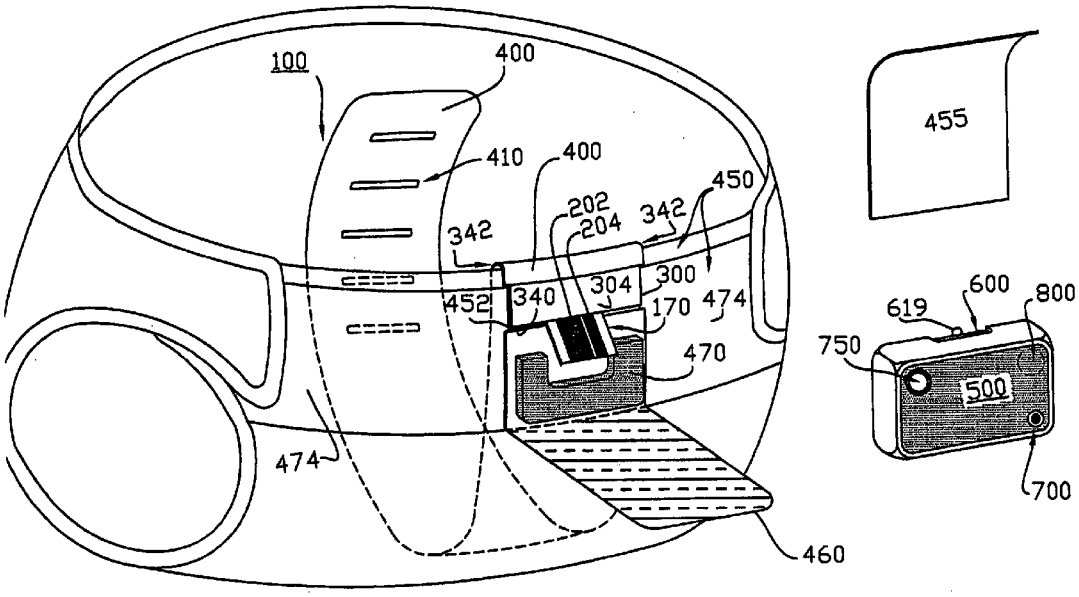

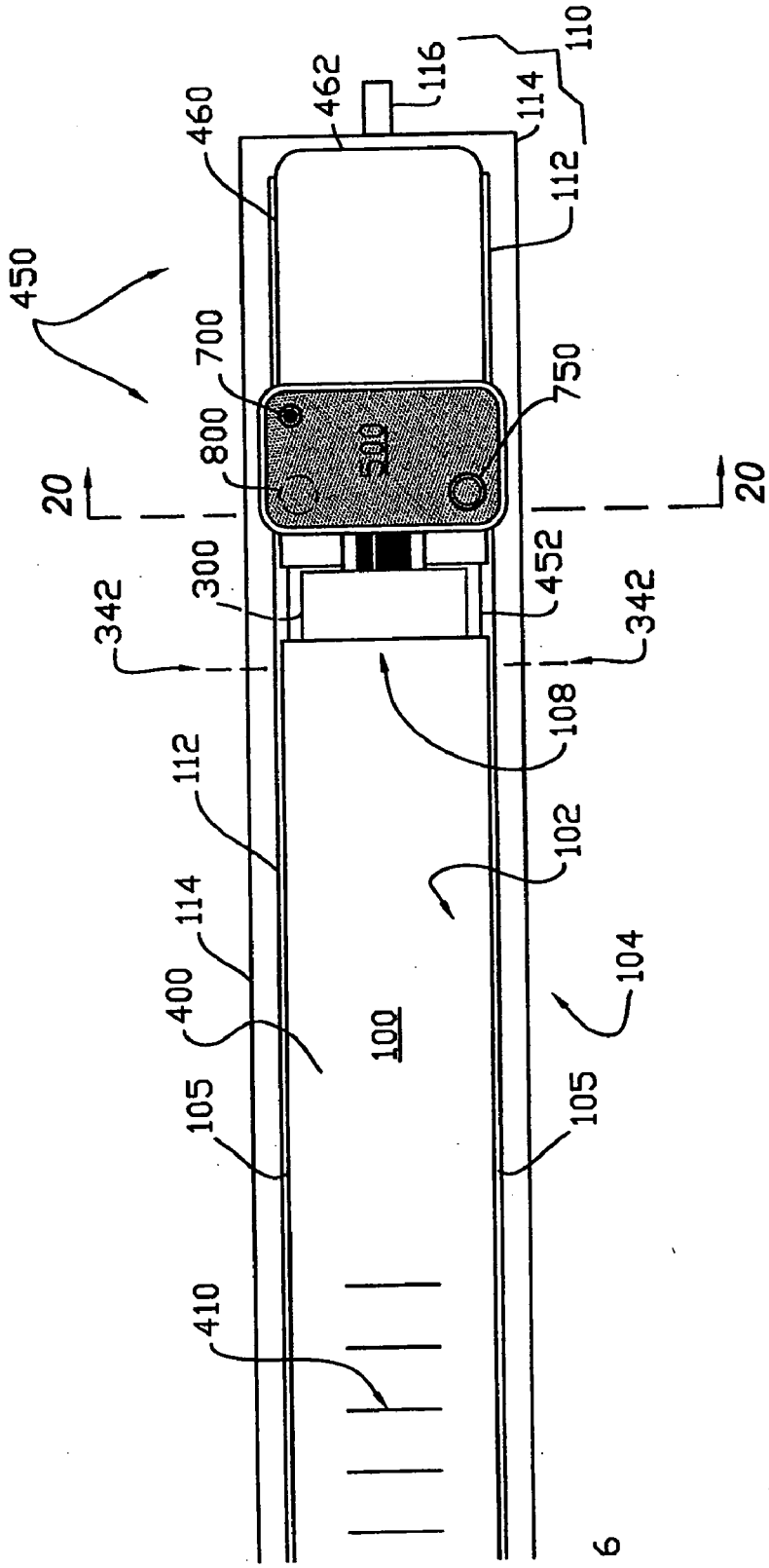
450
460
462
116
110
114
112
700
800
500
750
20
20
300
452
342
342
108
112
102
114
400
100
104
105
105
410

FIG. 1

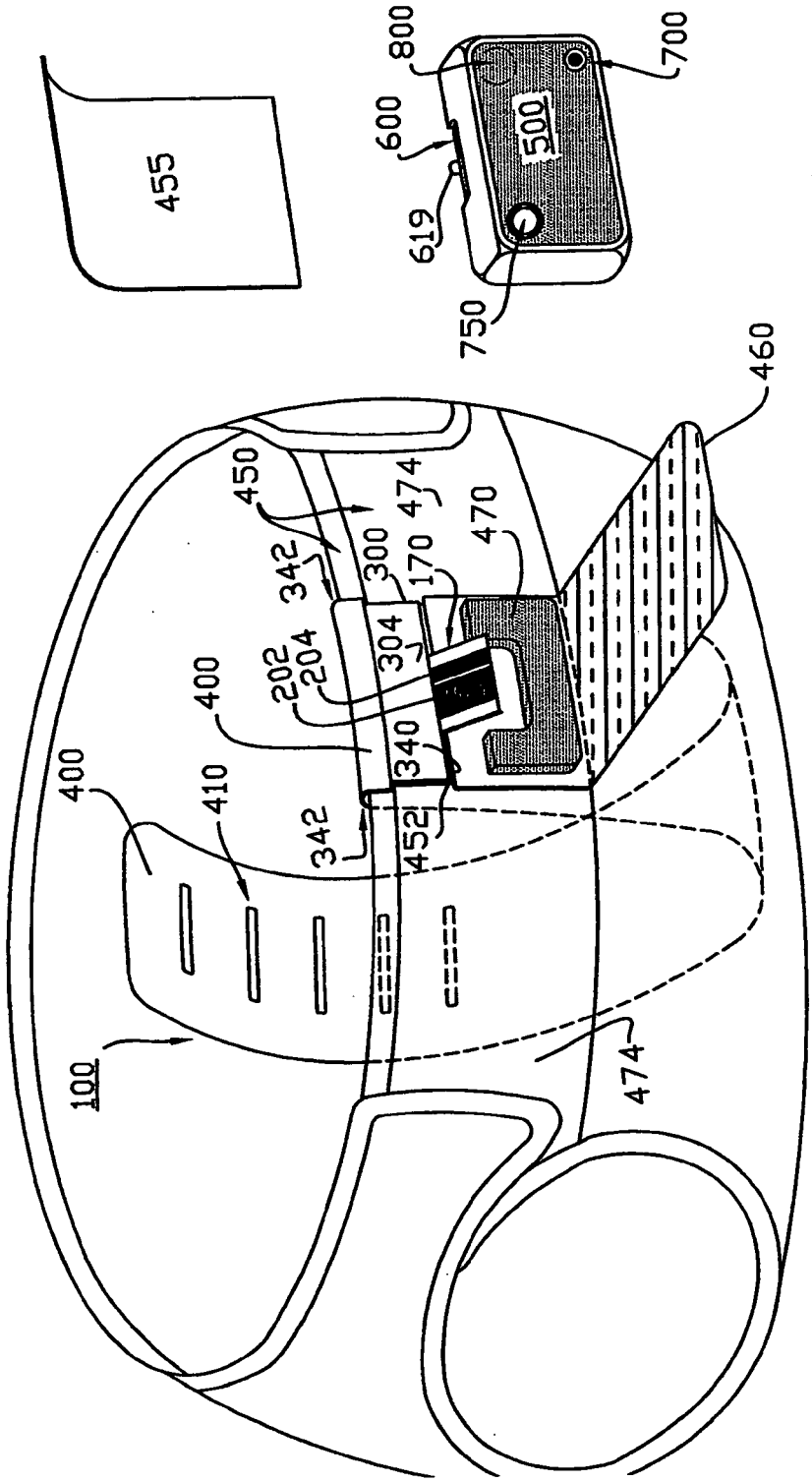
455
800
600
619
750
500
700
460
450
474
342
300
170
470
304
202
204
400
340
452
410
100

FIG. 2A

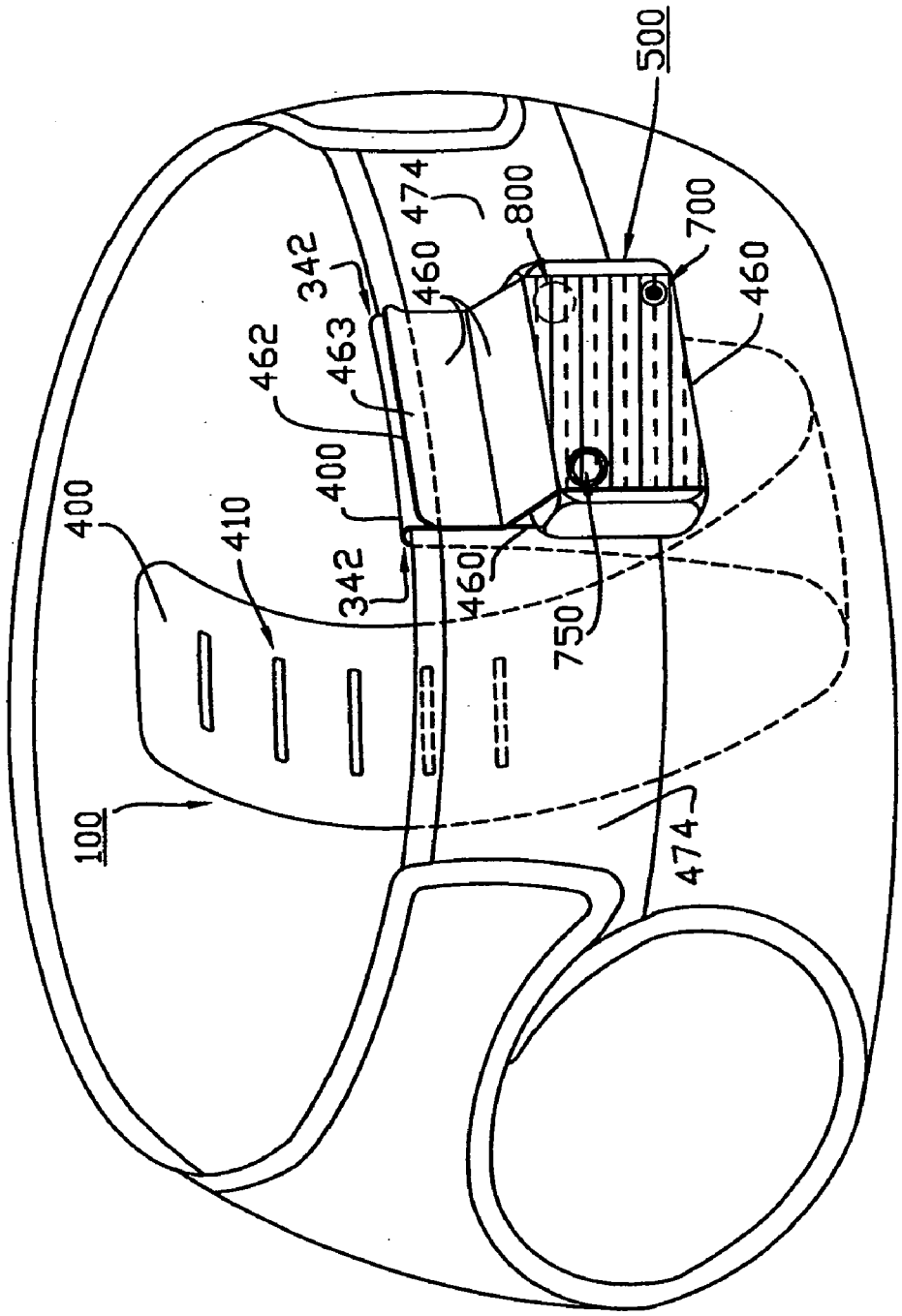
500
474
800
700
342
460
460
462
463
400
400
410
342
460
750
100
474

FIG. 2B

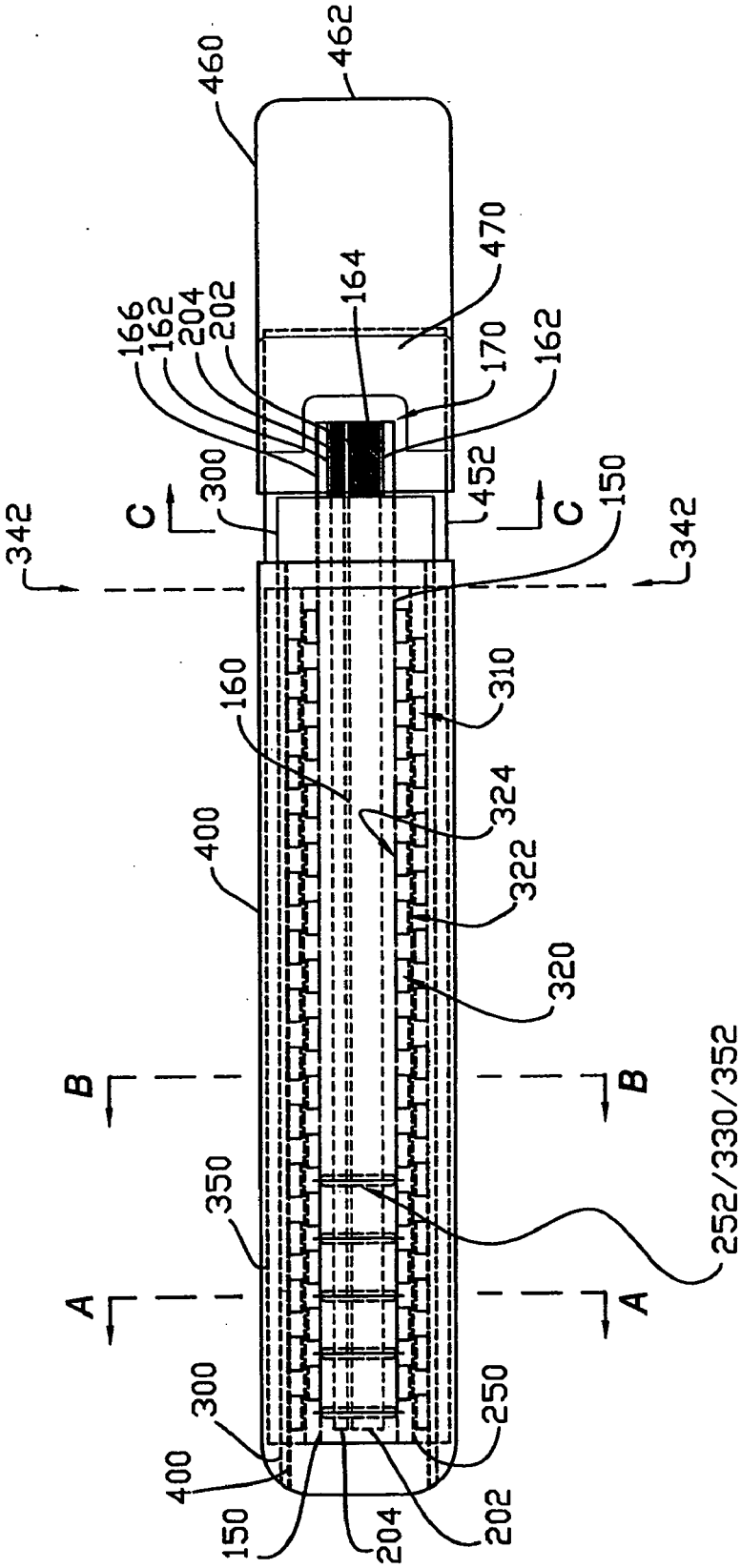
460
462
470
164
166
162
204
202
170
162
300
452
C
C
150
342
342
160
310
400
324
322
320
B
B
350
252/330/352
A
A
300
250
400
150
204
202

FIG. 3

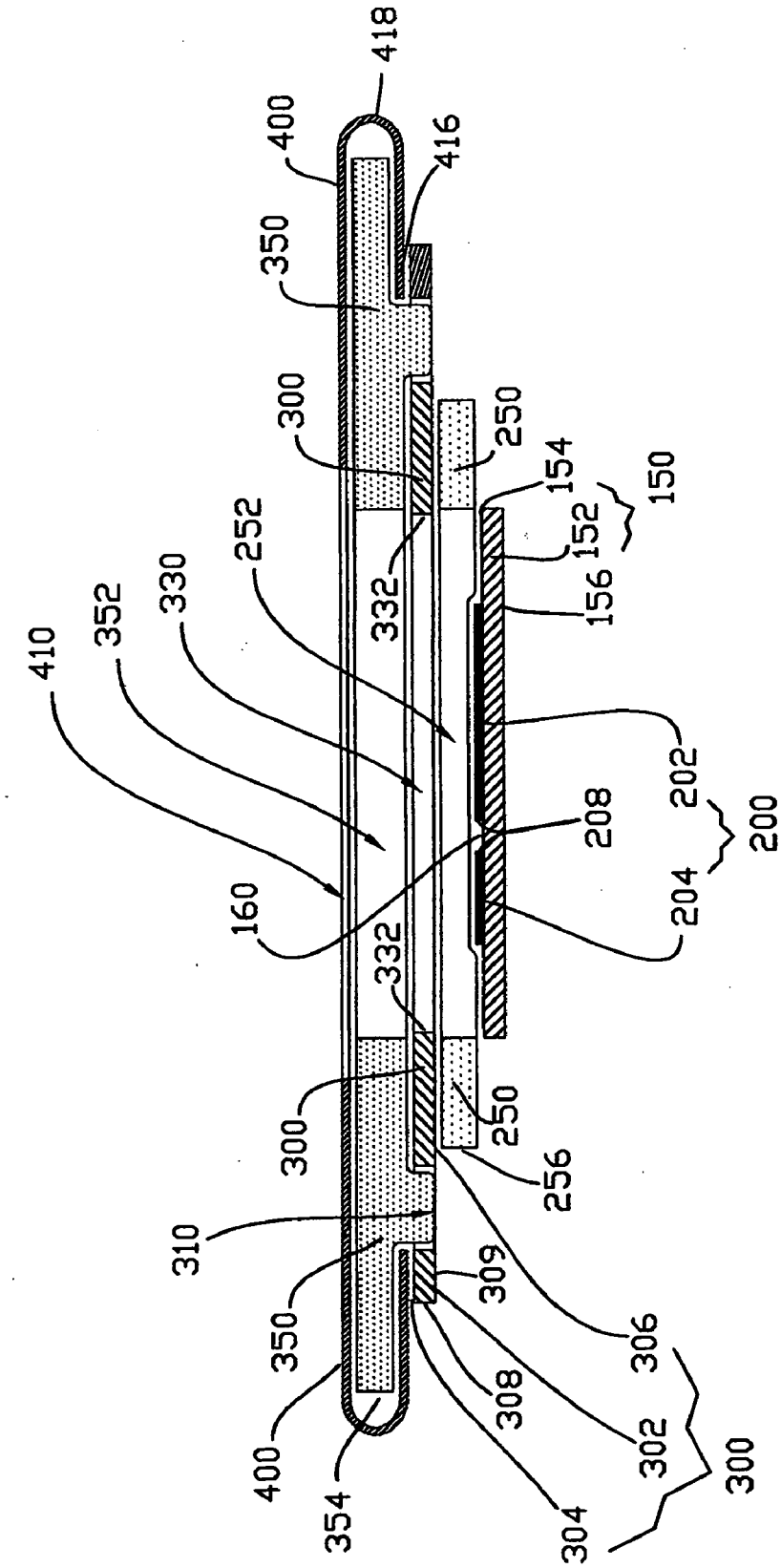
418
400
416
350
300
250
154
150
152
252
330
332
156
352
410
202
200
208
204
160
332
300
250
256
310
309
350
306
308
400
302
300
354
304

FIG. 3A

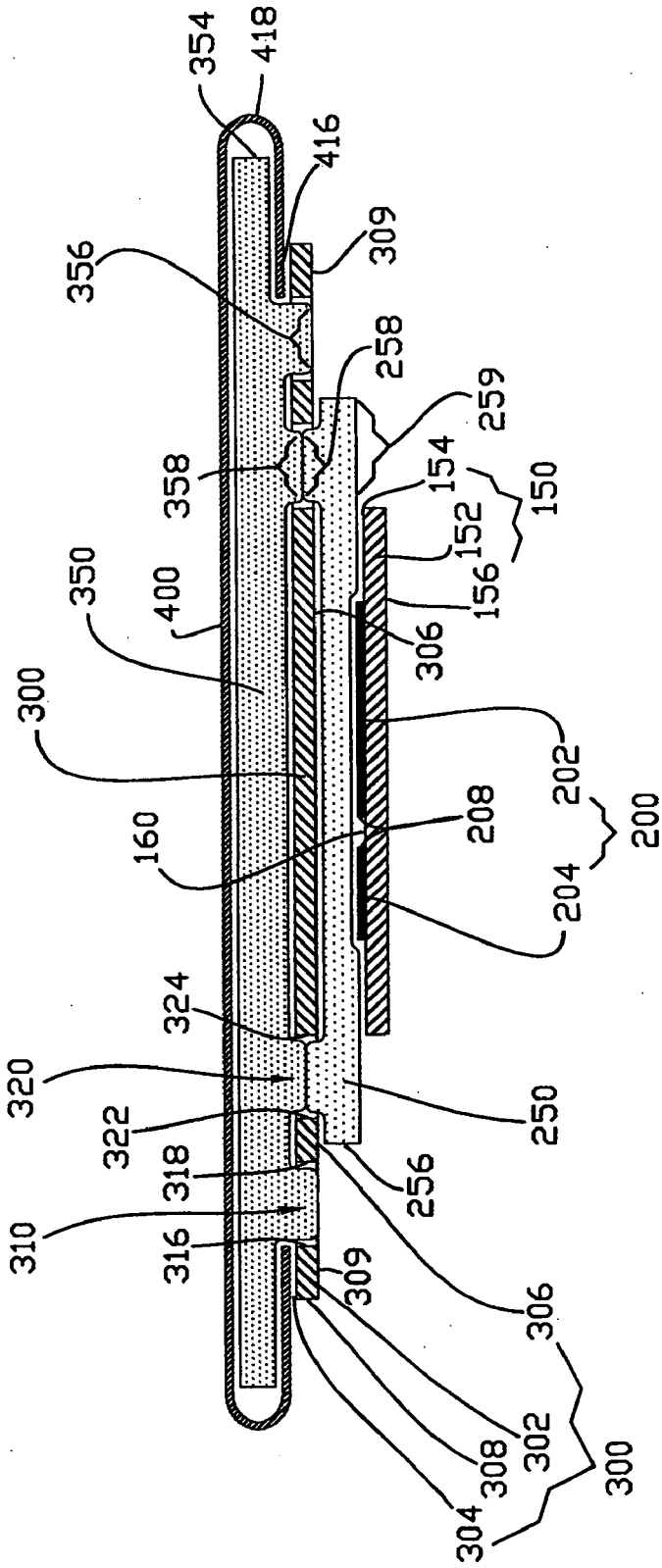
354
418
416
309
356
258
259
358
154
150
152
350
400
156
306
300
202
200
160
208
204
324
320
250
322
318
256
310
316
309
306
302
308
300
304

FIG. 3B

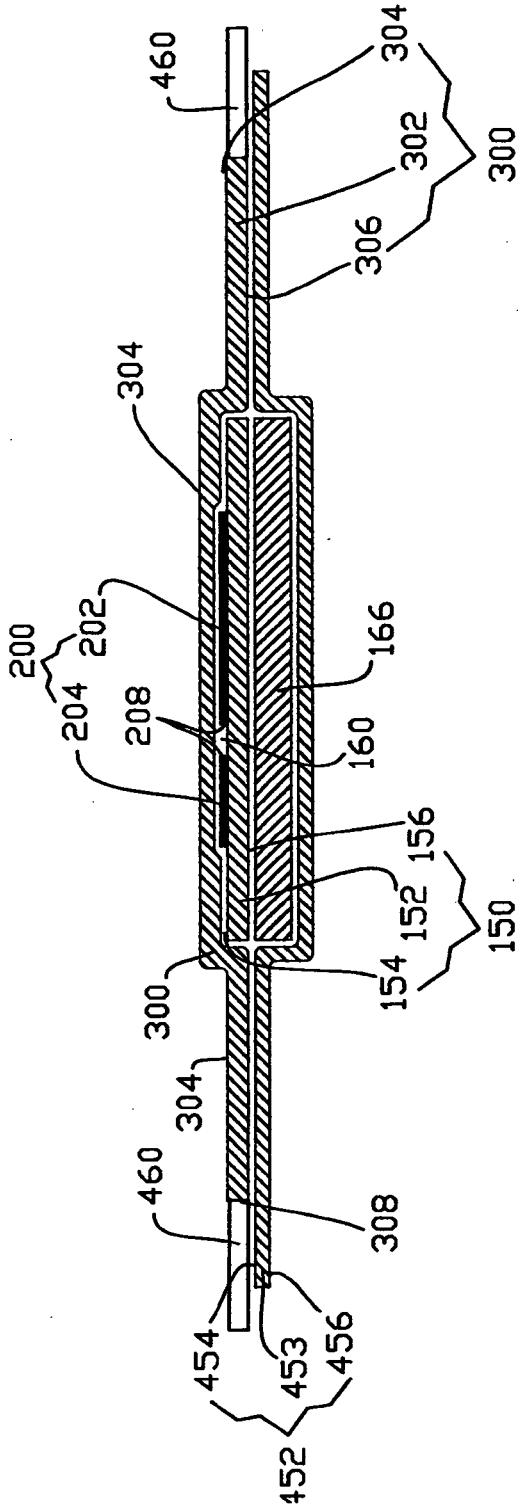
460
304
302
300
306
304
200
202
204
208
166
160
156
152
150
154
300
304
460
308
454
453
456
452

FIG. 3C

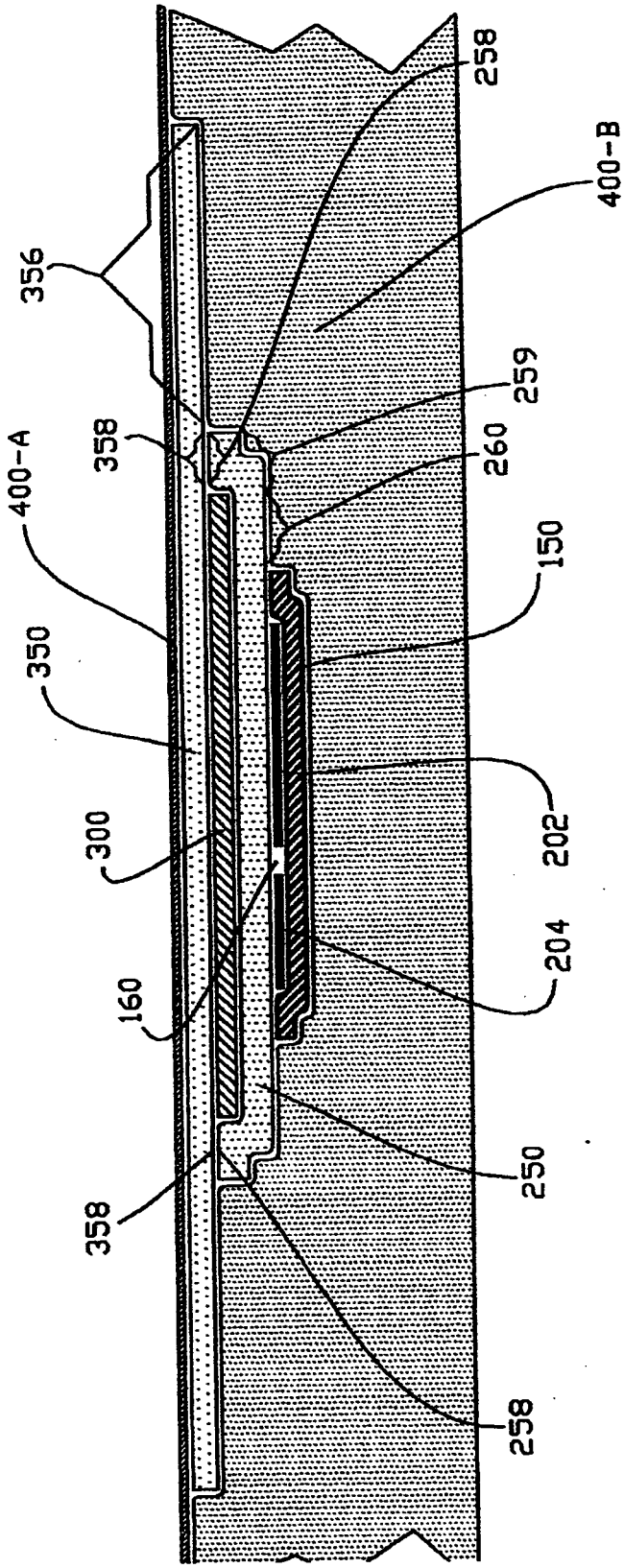
356
358
400-A
350
300
160
358
258
400-B
259
260
150
202
204
250
258

FIG. 3D

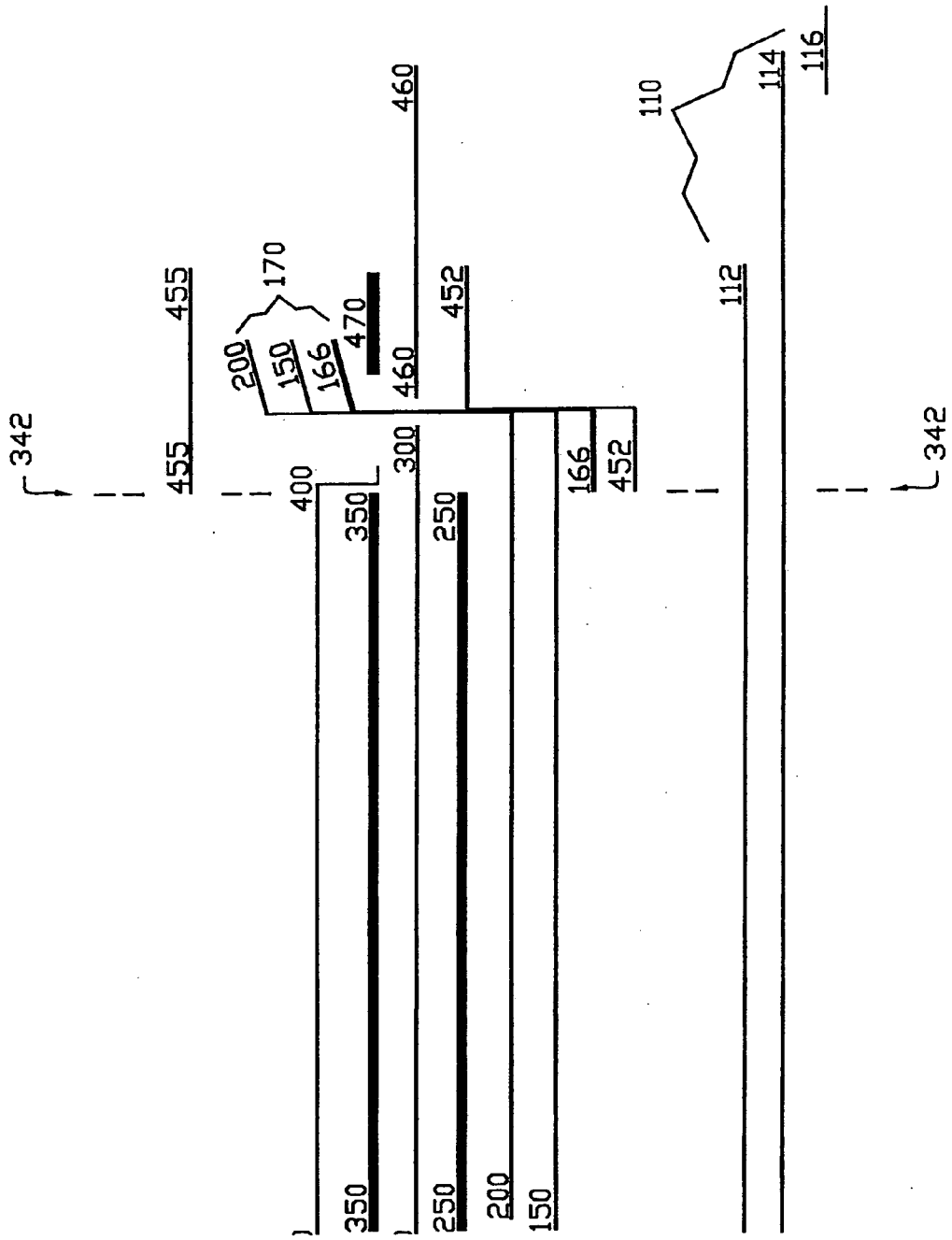
342
455
455
400
350
350
300
250
250
200
150
170
200
150
166
470
460
460
452
166
452
110
112
114
116
342

FIG. 4

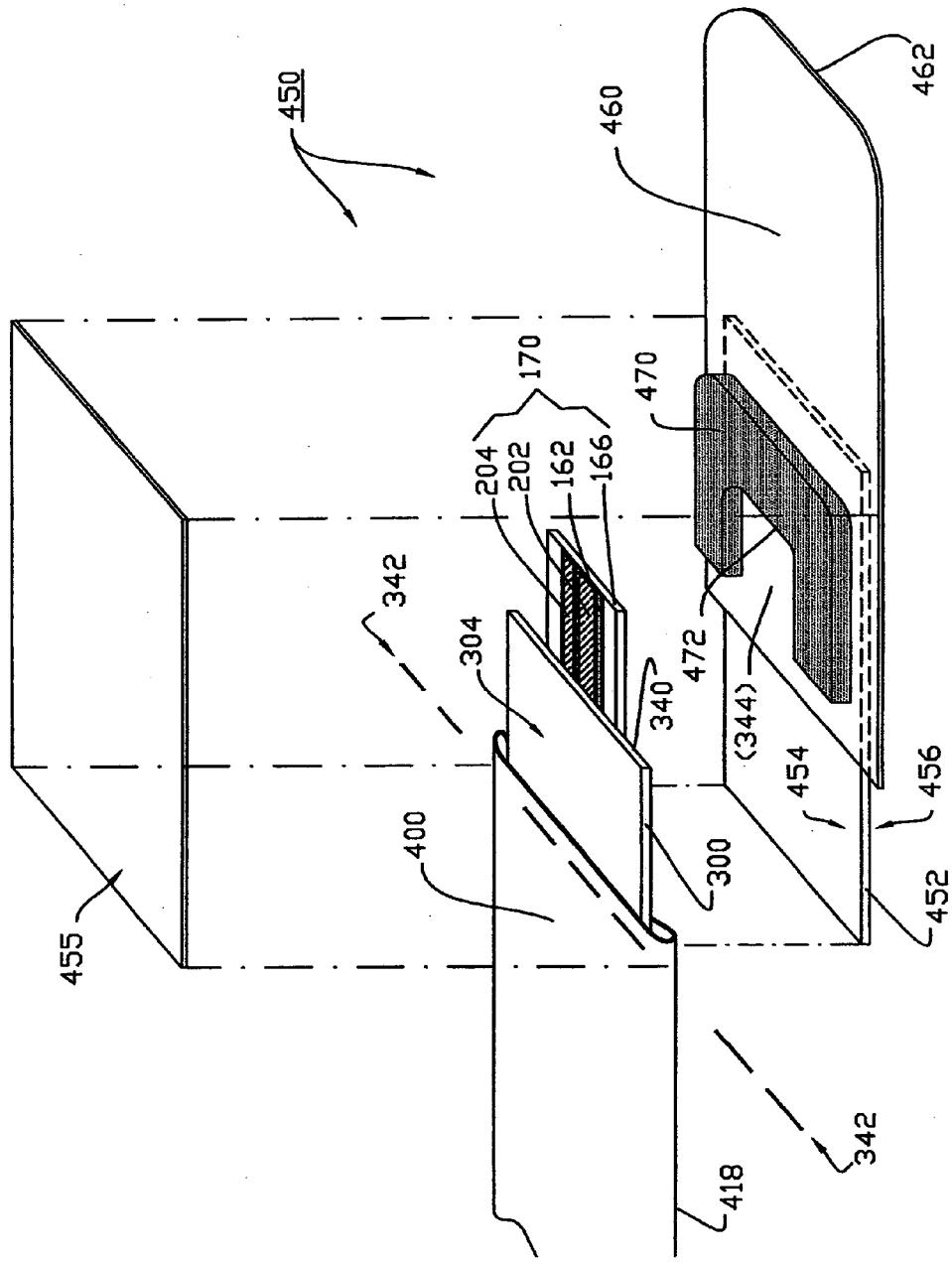
450
460
462
170
470
204
202
162
166
342
304
472
340
(344)
454
456
400
300
452
455
342
418

FIG. 5A

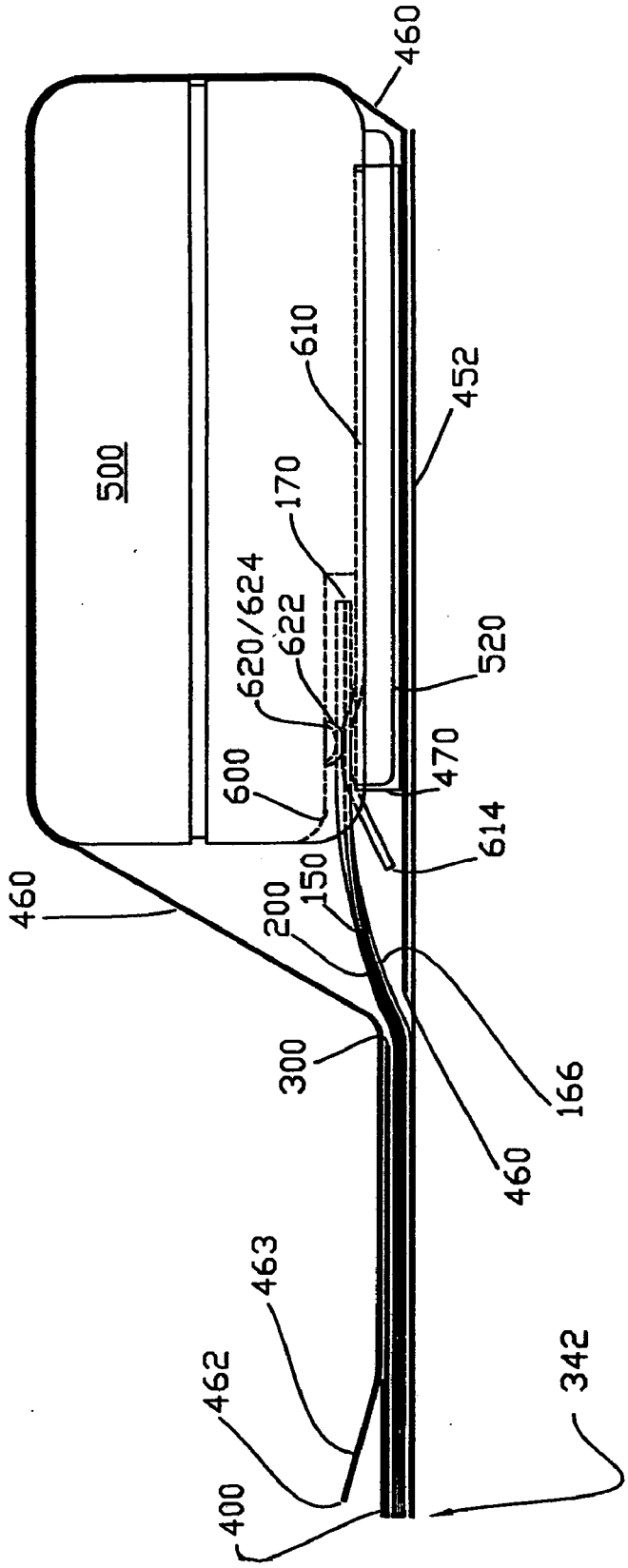
460
500
610
452
170
620/624
622
520
600
470
614
460
150
200
300
166
460
463
462
342
400

FIG. 5B

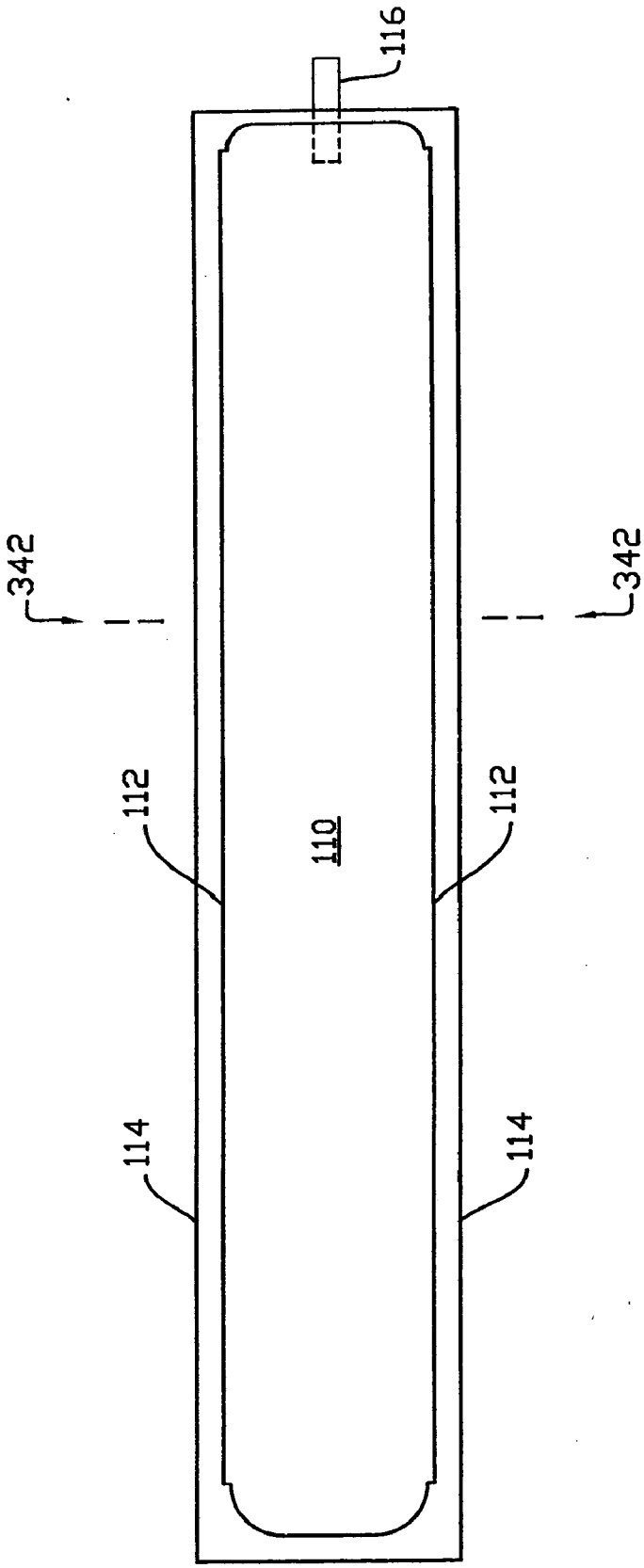

FIG. 6

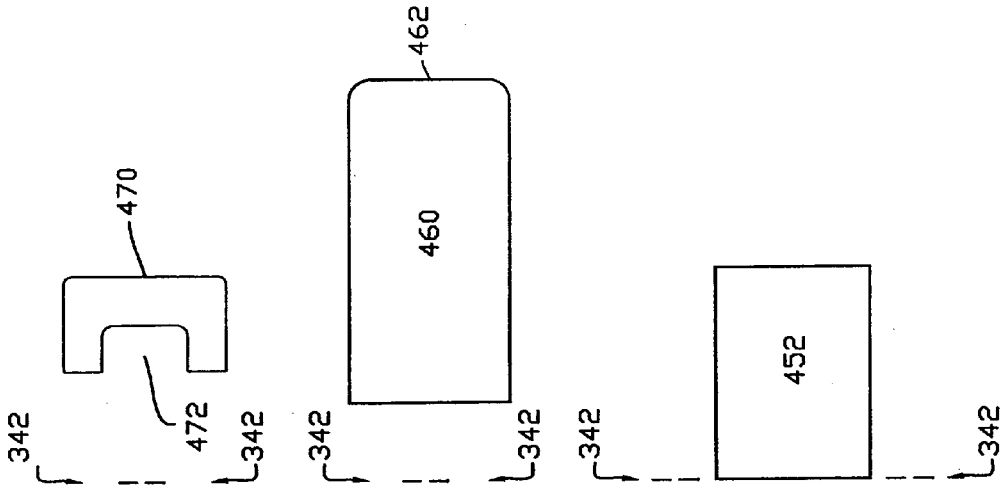

FIG. 9

FIG. 8

FIG. 7

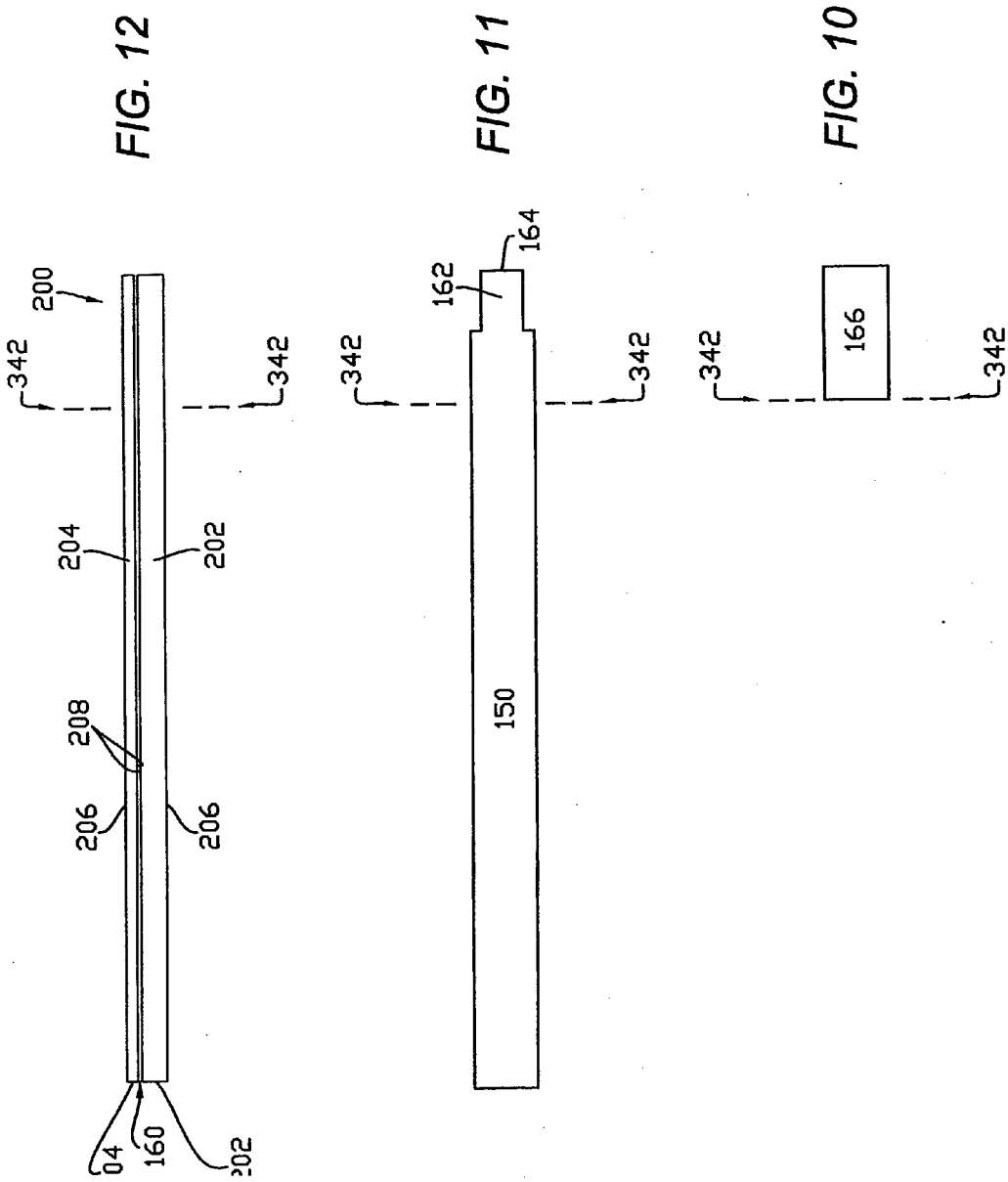

FIG. 12

FIG. 11

FIG. 10

FIG. 14

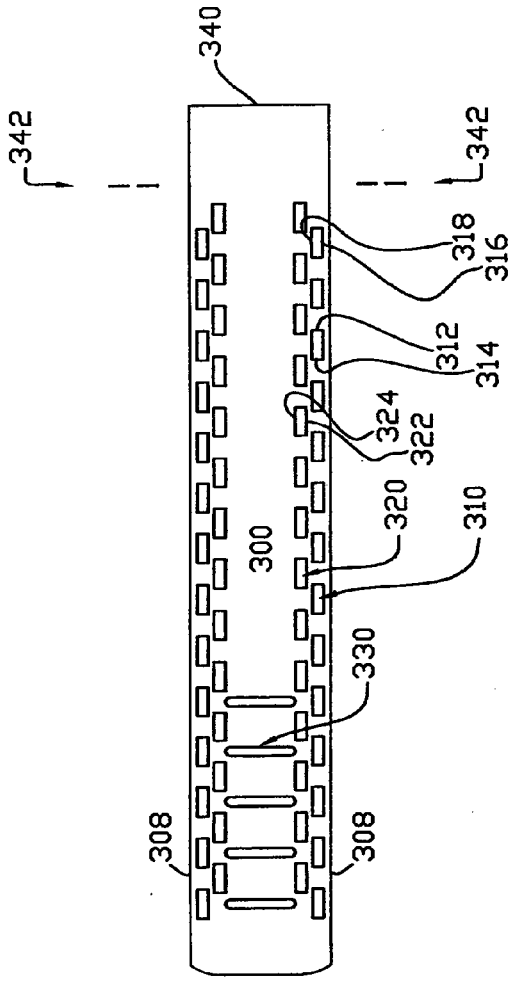
340
342
342
318
316
312
314
324
322
320
310
300
330
308
308

FIG. 13

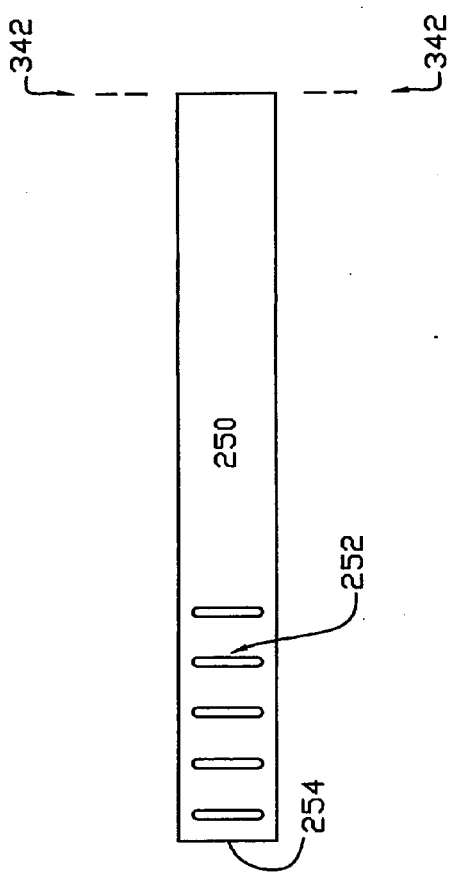
342
342
250
252
254

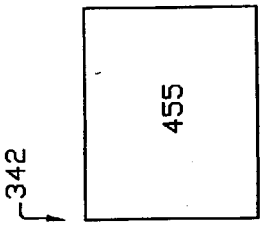

FIG. 17

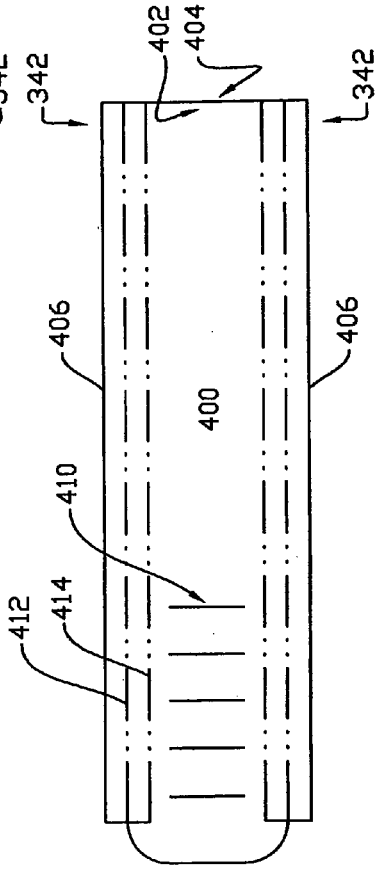

FIG. 16

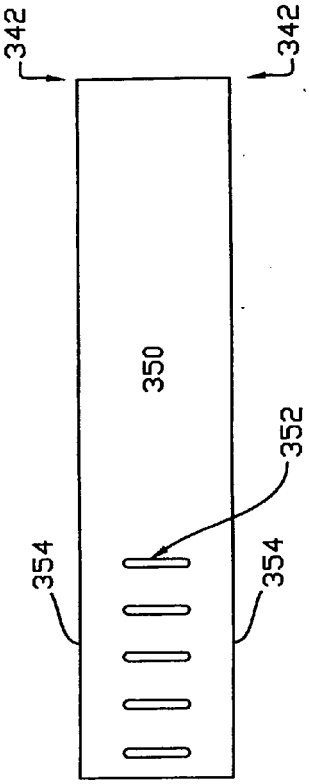

FIG. 15

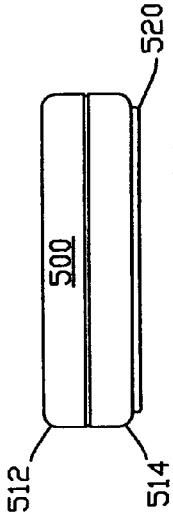

FIG. 18D

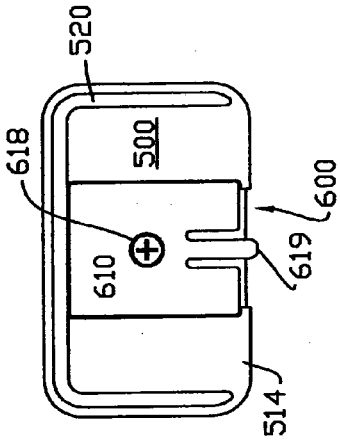

FIG. 18C

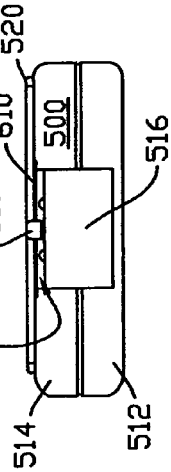

FIG. 18B

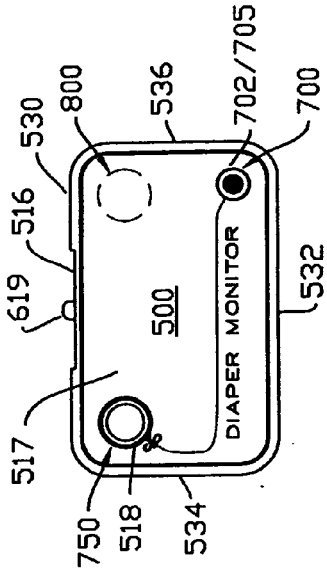

FIG. 18A

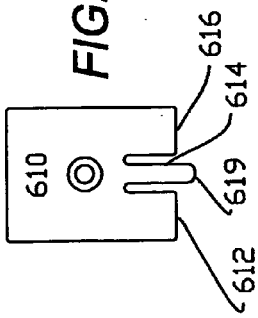

FIG. 19B

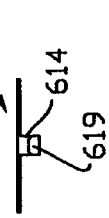

FIG. 19A

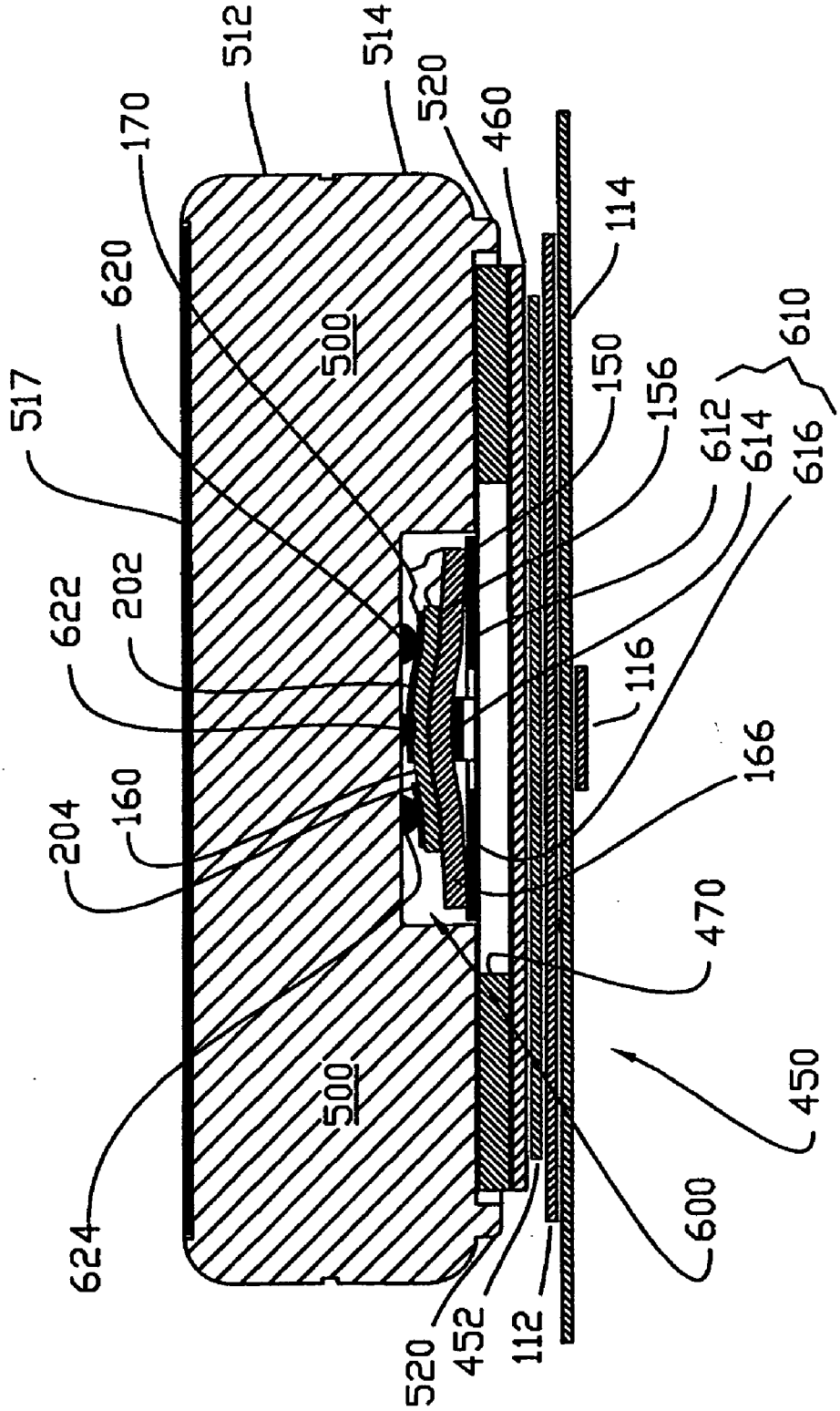
512
514
520
460
170
114
620
500
610
517
150
156
612
614
616
622
202
116
166
204
160
470
450
500
624
600
520
452
112

FIG. 20

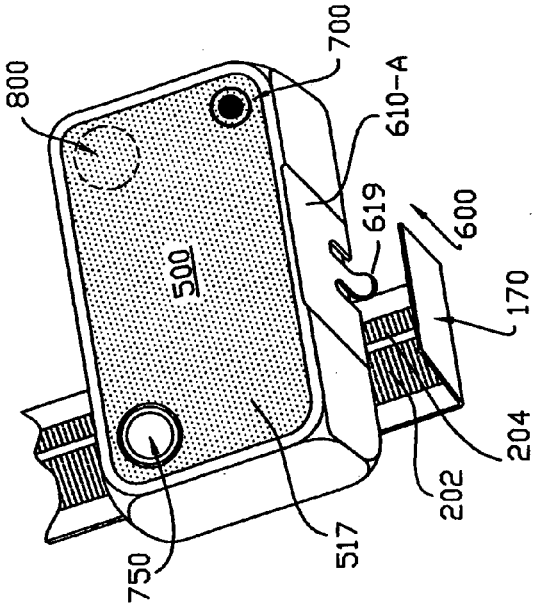

FIG. 21B

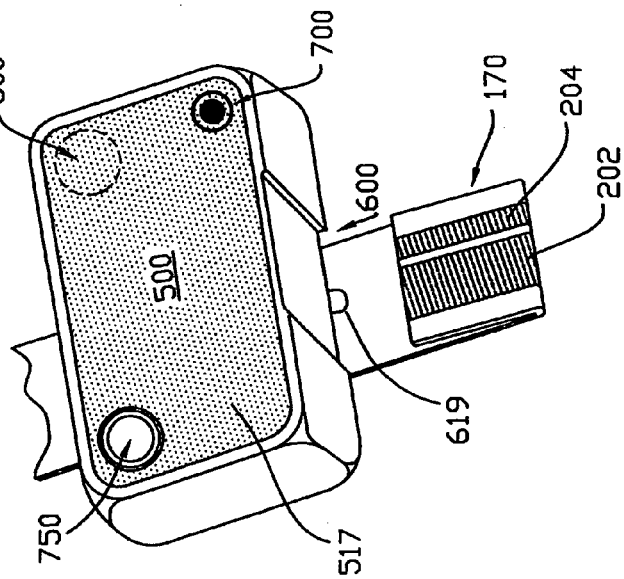

FIG. 21A

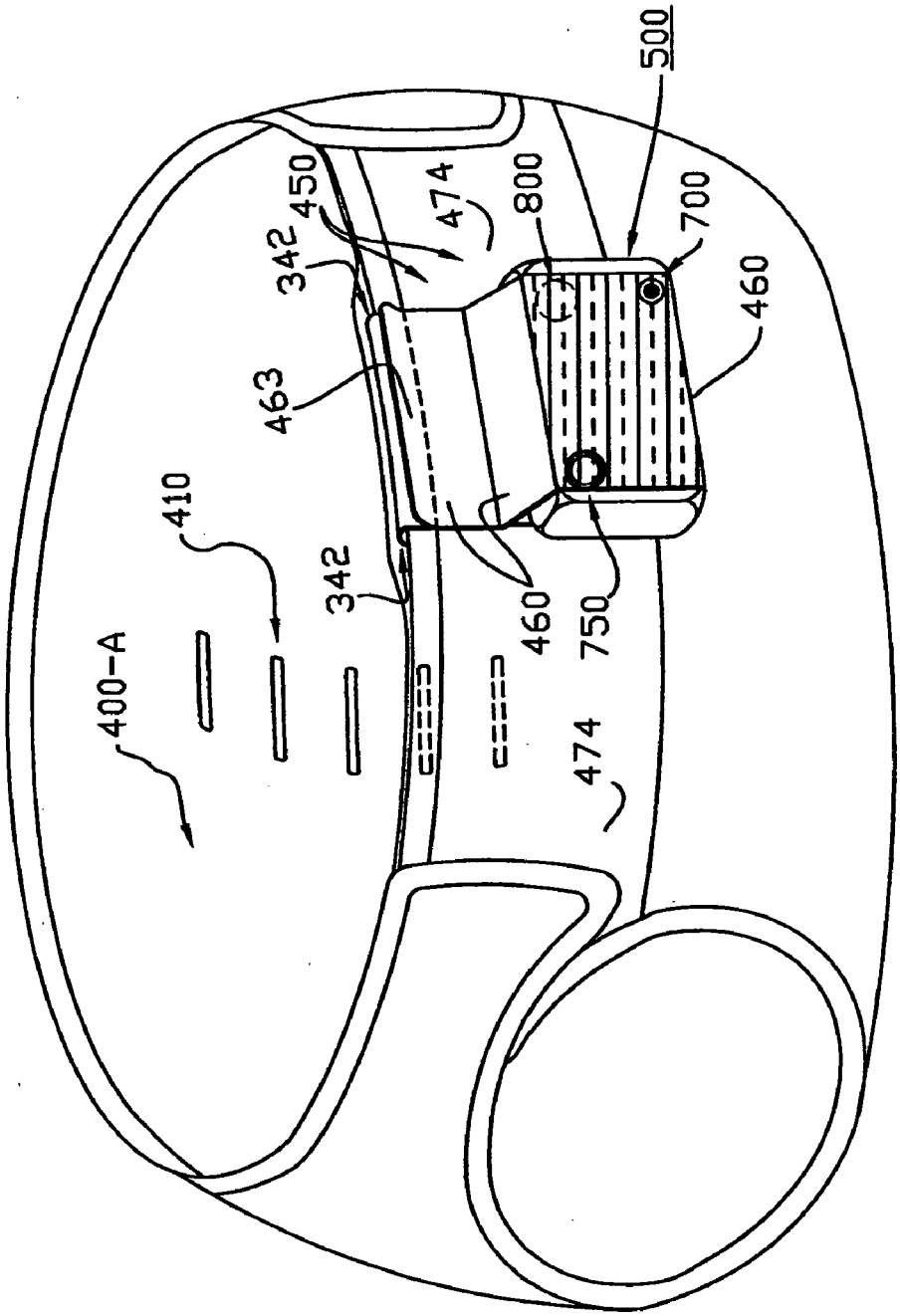

FIG. 22A

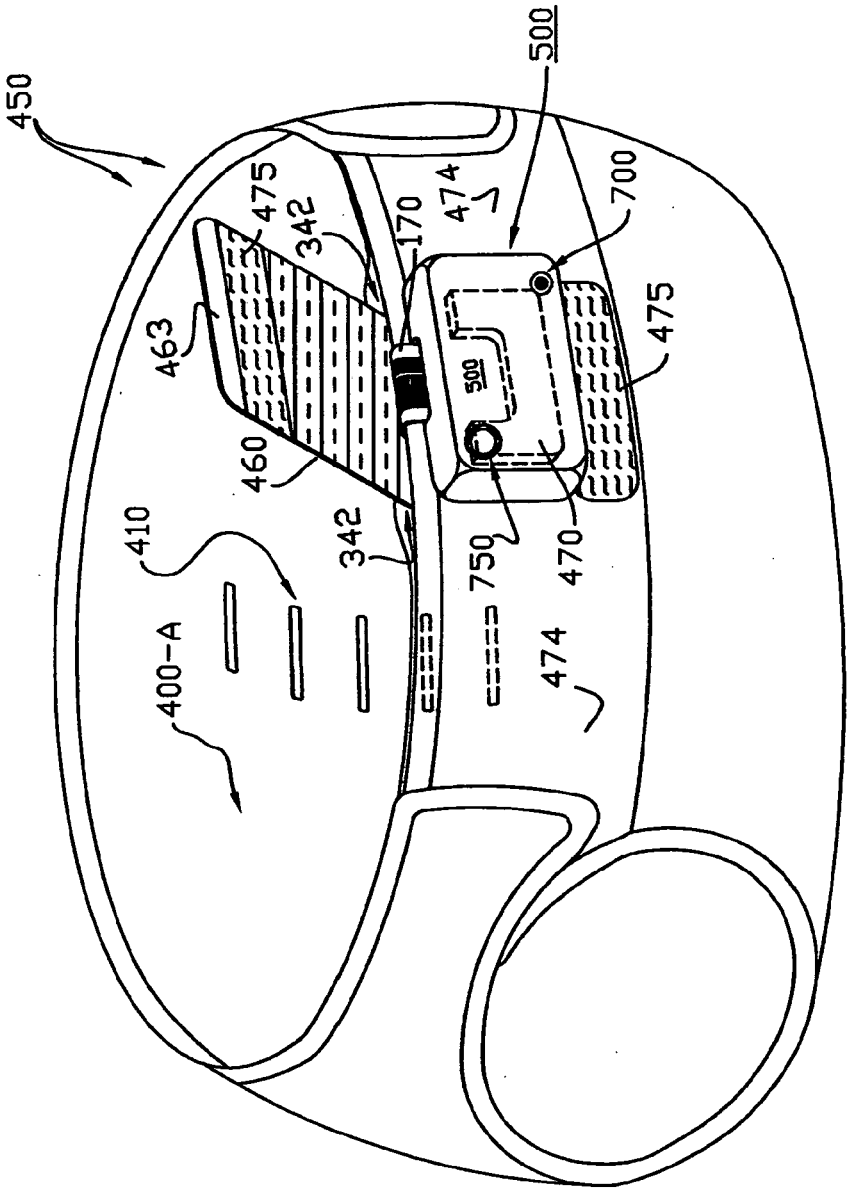
450
500
475
342
170
474
700
463
475
500
460
410
342
750
470
400-A
474

FIG. 22B

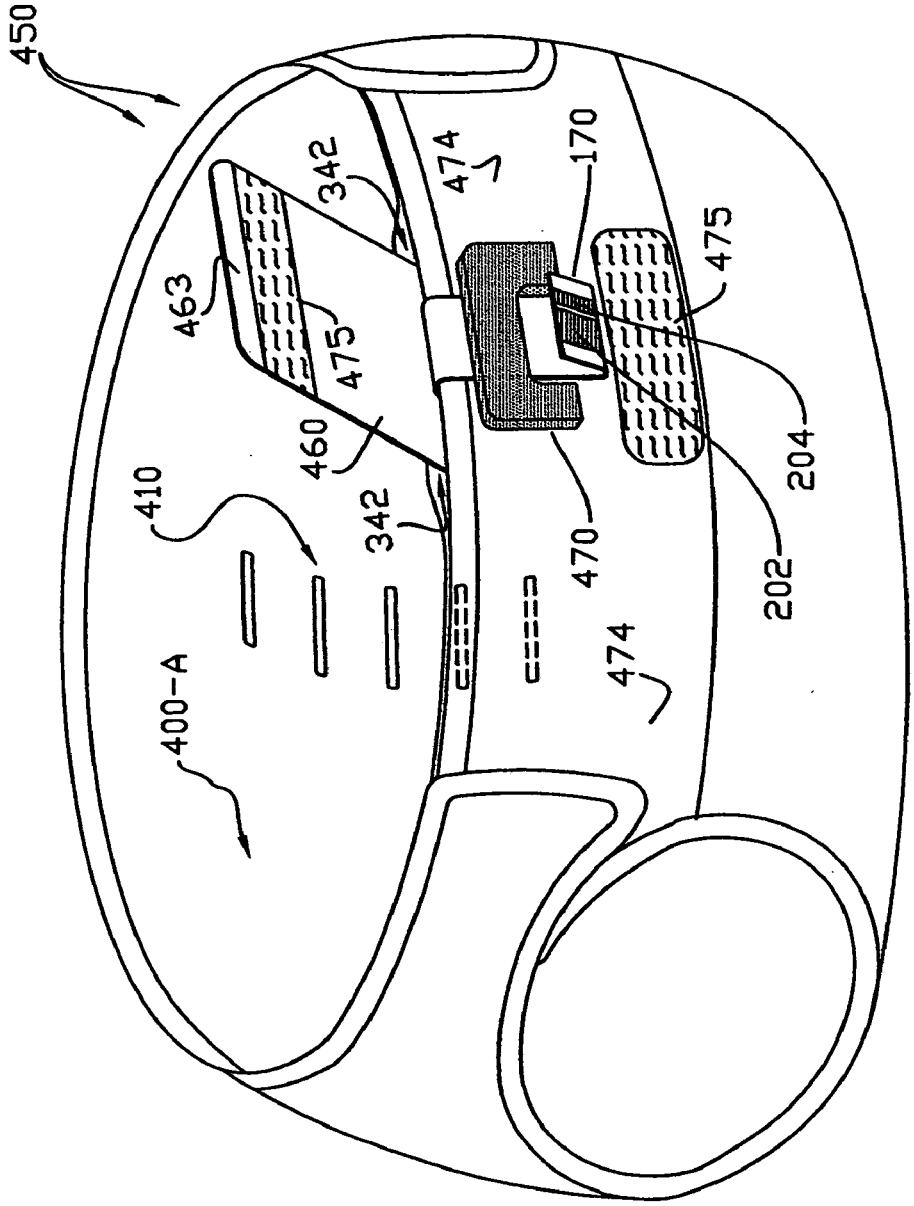

FIG. 22C

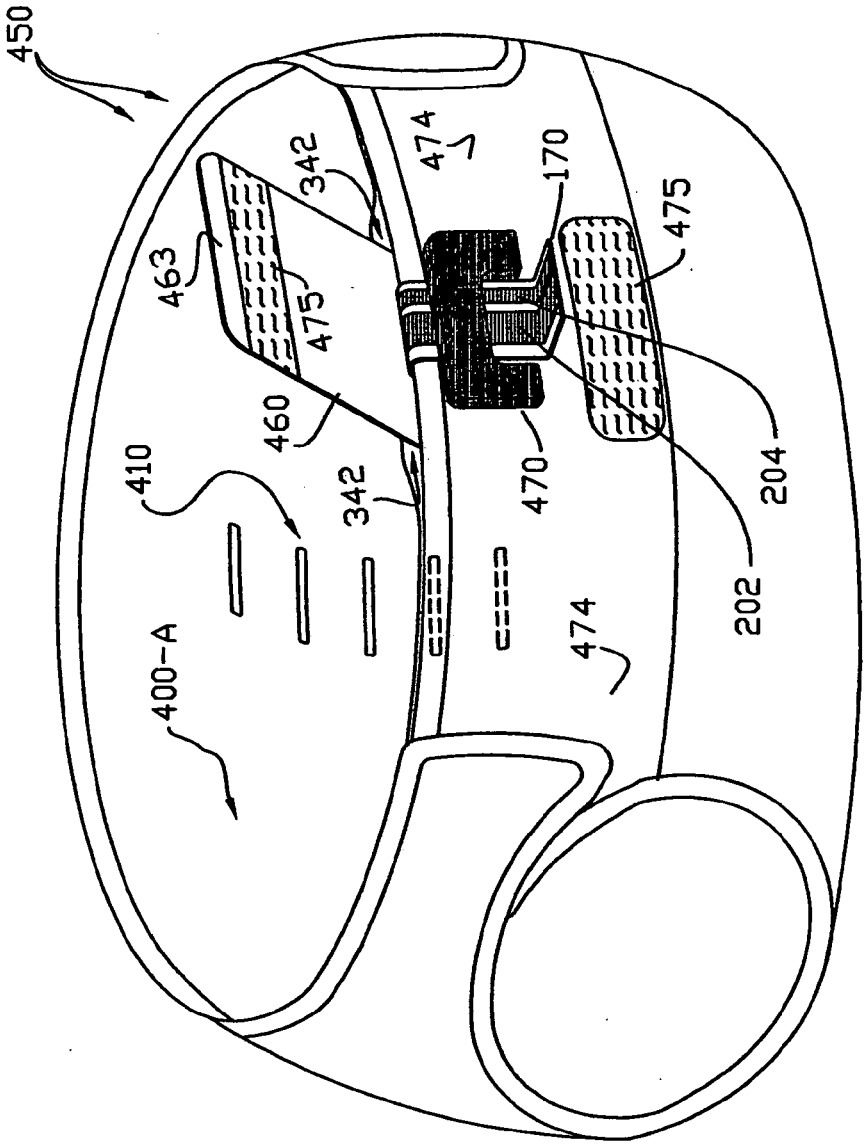

FIG. 22D

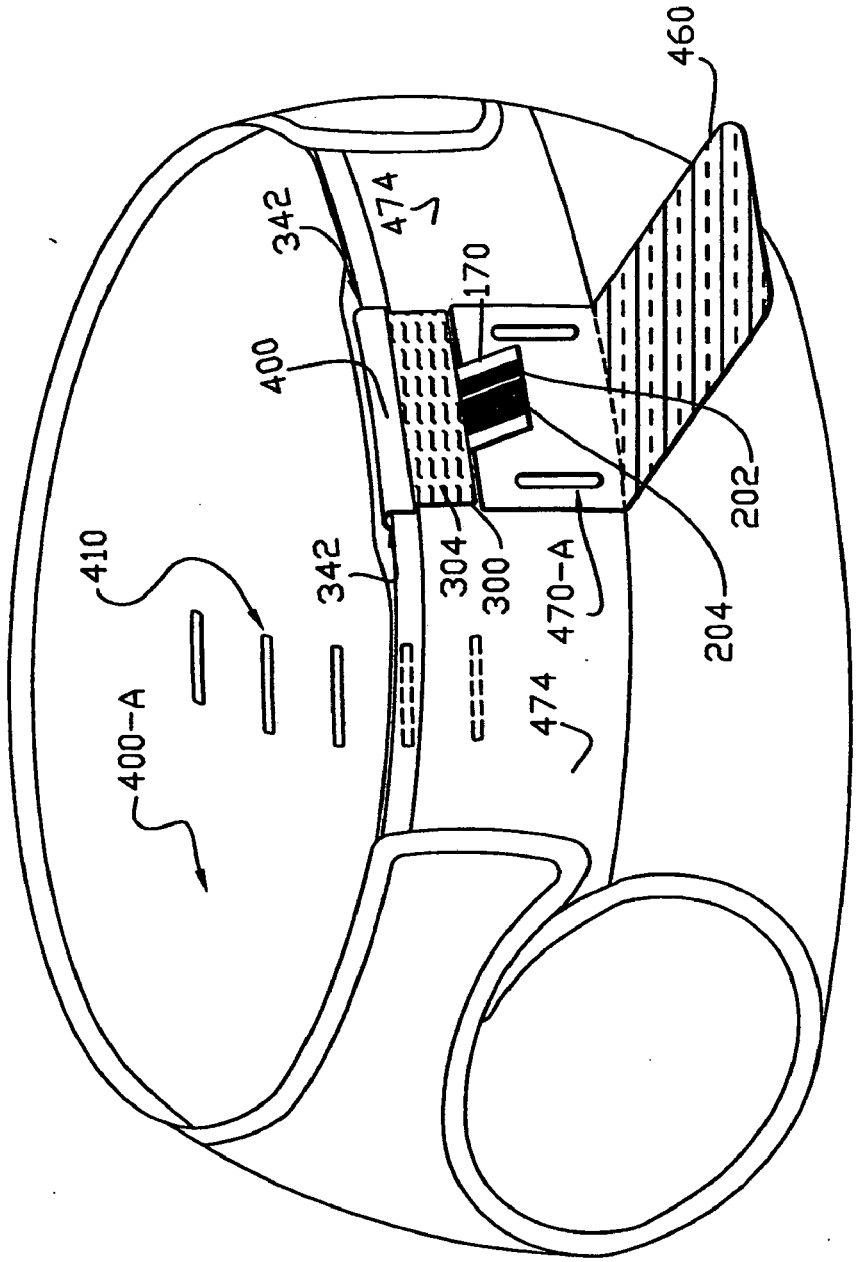

FIG. 22E

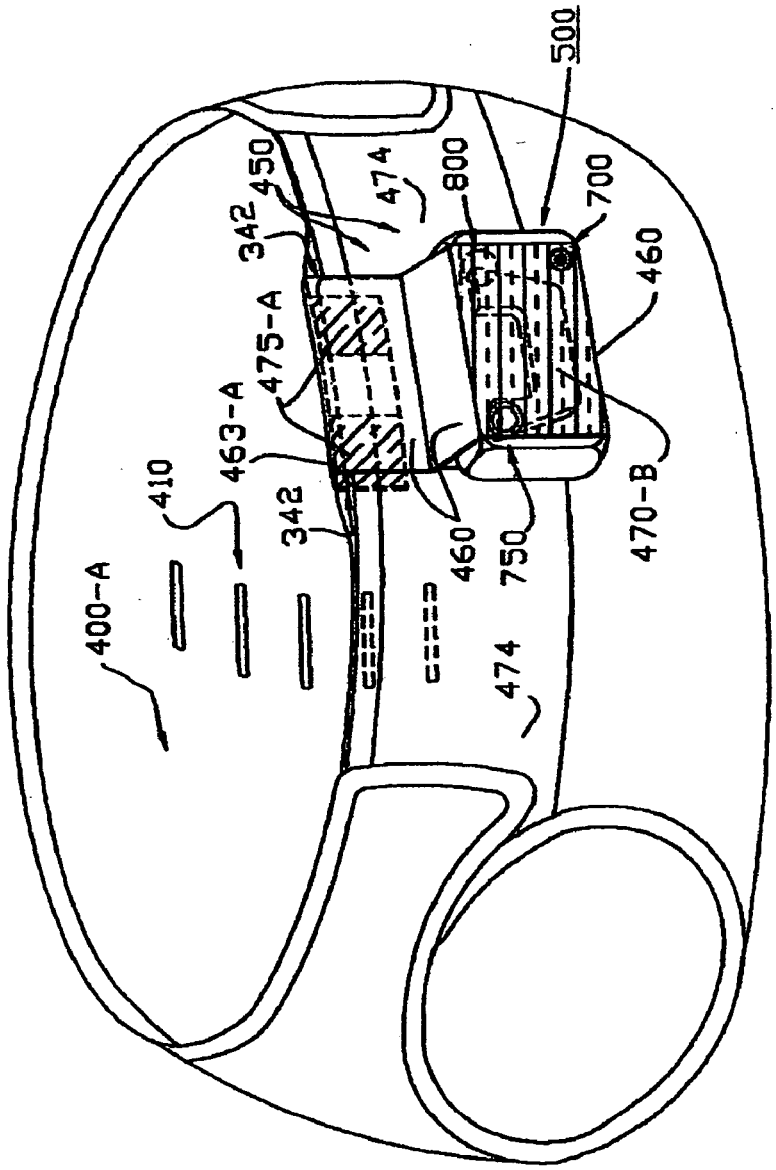
500
450
474
800
700
342
460
475-A
463-A
410
342
460
750
470-B
400-A
474

FIG. 22F

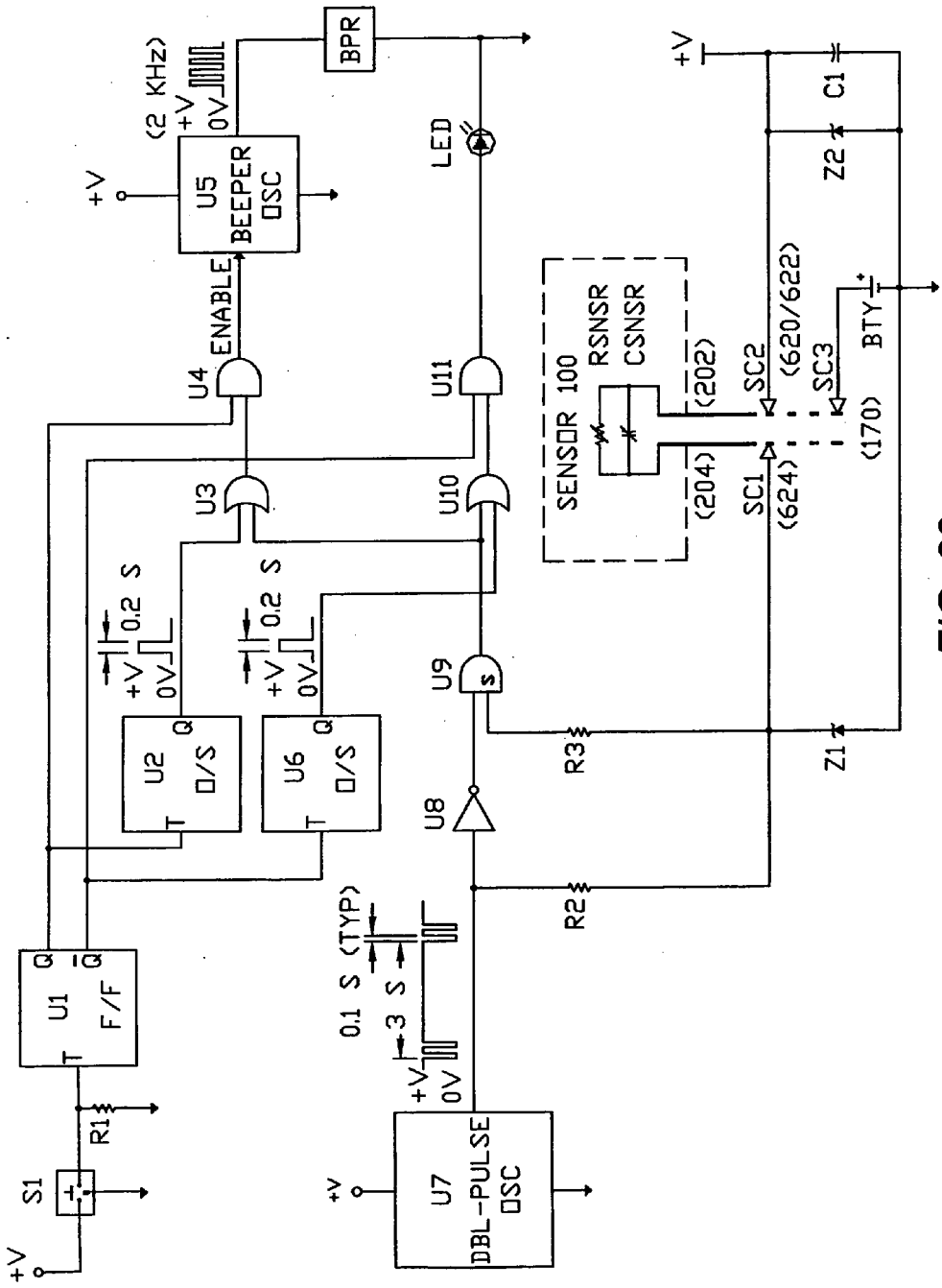
+V
S1
R1
U1
F/F
Q
T
U2
O/S
U6
O/S
0.2 S
+V
0V
U3
U4
ENABLE
U5
BEEPER
OSC
(2 KHz)
BPR
LED
U11
U10
U9
U8
R2
R3
U7
DBL-PULSE
OSC
0.1 S (TYP)
3 S
SENSOR 100
RSNSR
CSNSR
(202)
(204)
SC1
(624)
SC2
(620/622)
SC3
(170)
BTY
Z1
Z2
C1

FIG. 23

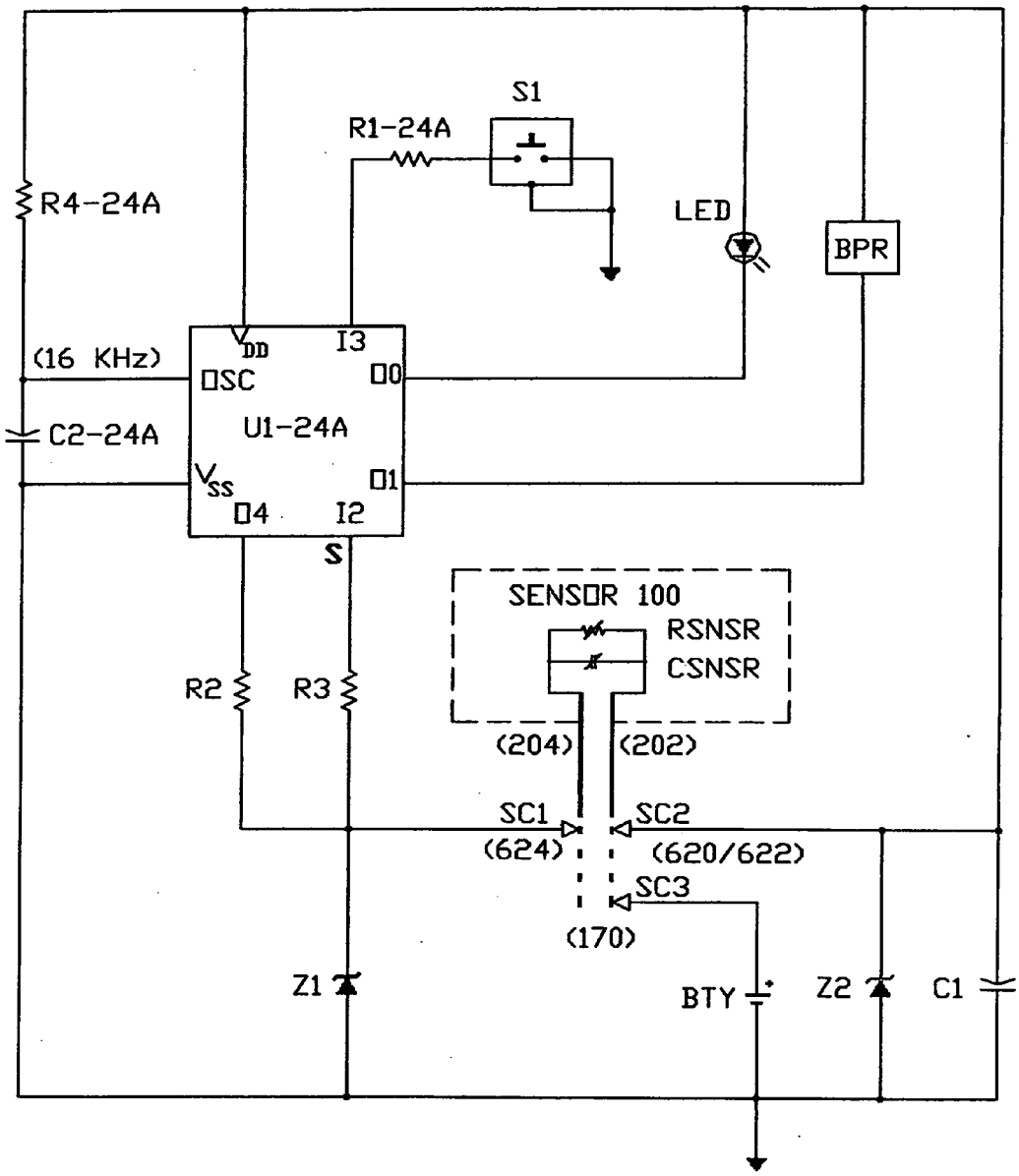
S1
R1-24A
R4-24A
LED
BPR
(16 KHz)
VDD
I3
OSC
O0
C2-24A
U1-24A
VSS
O1
O4
I2
S
SENSOR 100
RSNSR
CSNSR
R2
R3
(204)
(202)
SC1
SC2
(624)
(620/622)
SC3
(170)
Z1
BTY
Z2
C1

FIG. 24A

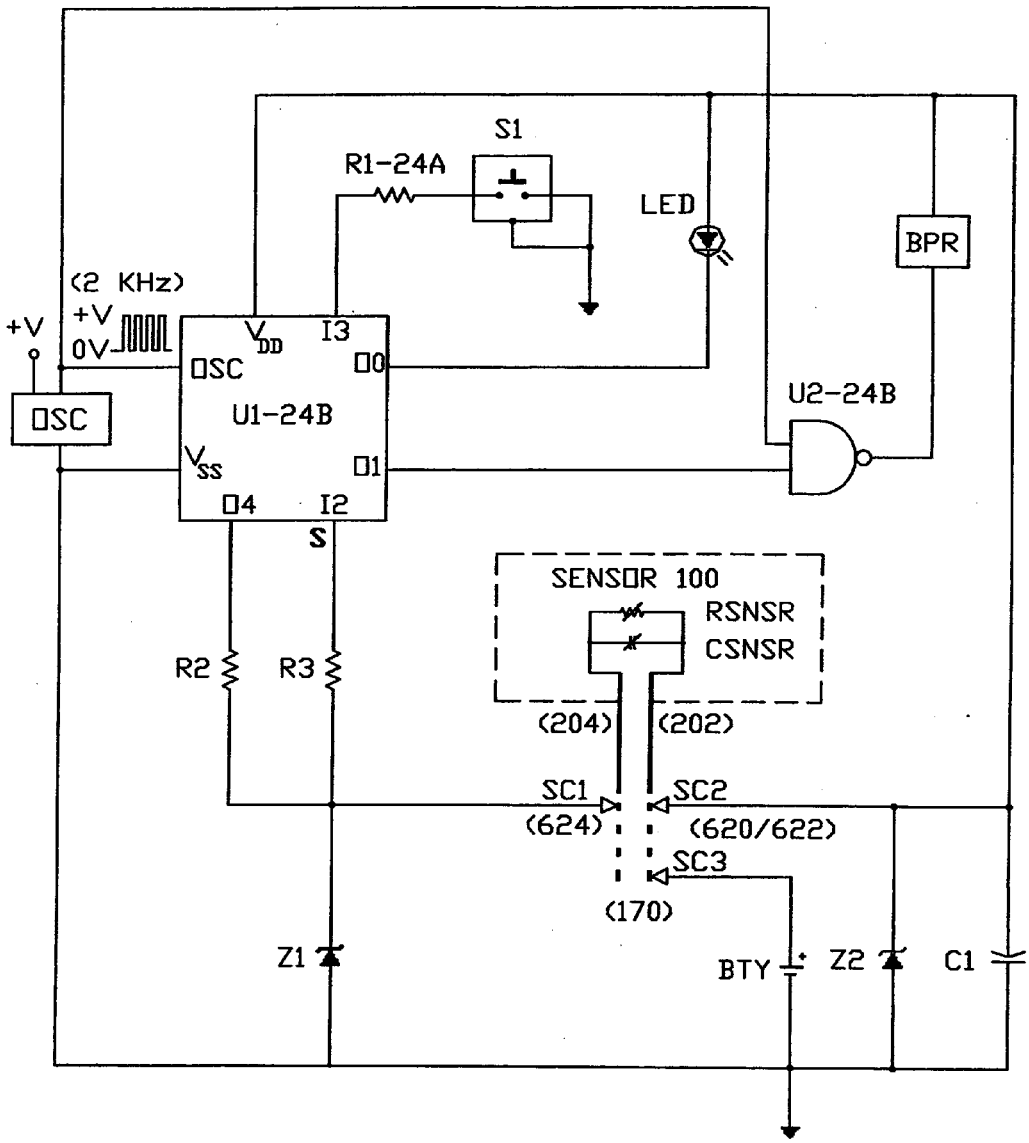
S1
R1-24A
LED
BPR
(2 KHz)
+V
0V
+V
VDD
I3
OSC
O0
U1-24B
U2-24B
OSC
VSS
O1
O4
I2
S
SENSOR 100
RSNSR
CSNSR
R2
R3
(204)
(202)
SC1
(624)
SC2
(620/622)
SC3
(170)
Z1
BTY
Z2
C1

FIG. 24B

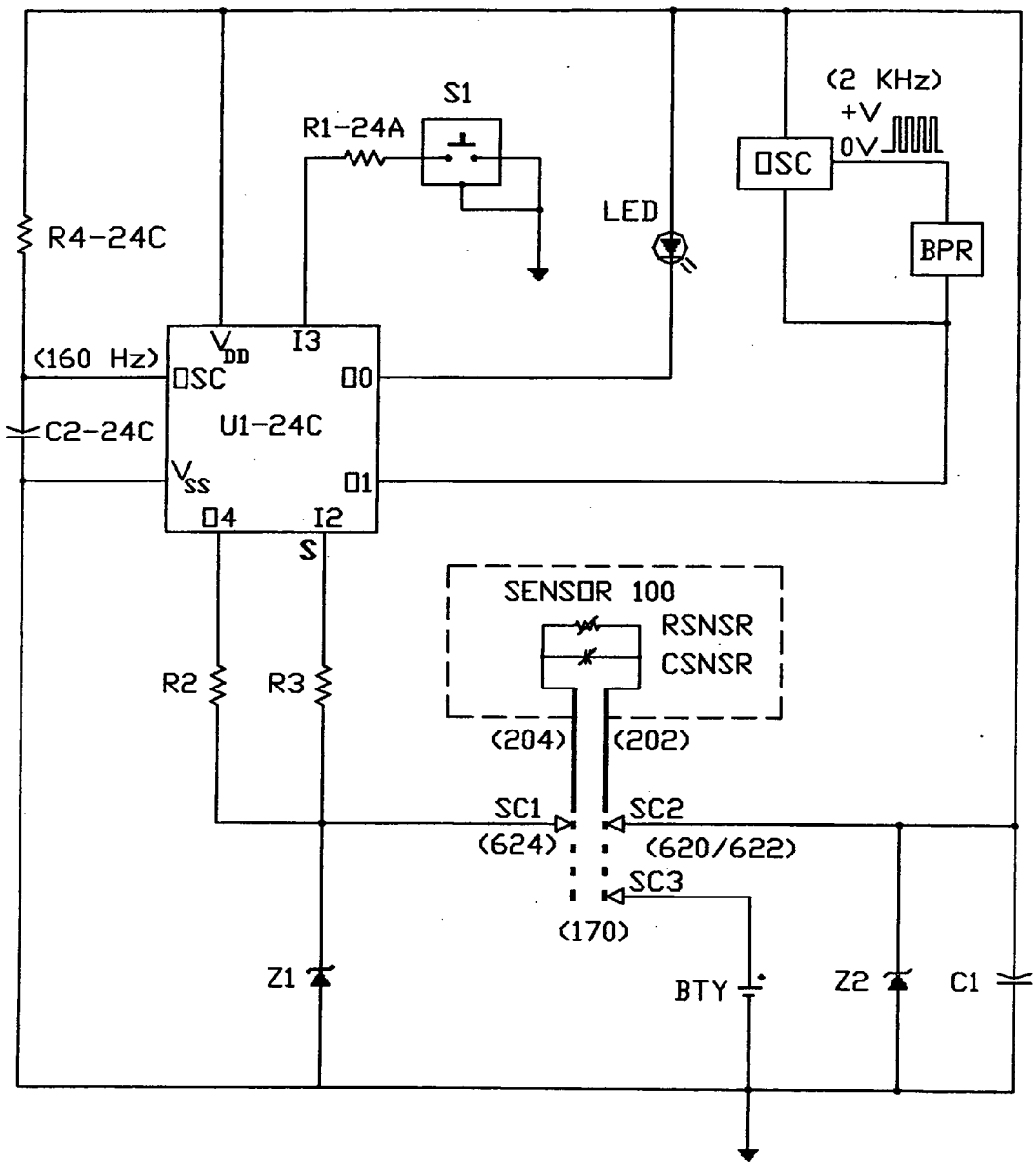
S1
R1-24A
(2 KHz)
+V
0V
OSC
LED
BPR
R4-24C
(160 Hz)
VDD
I3
OSC
O0
C2-24C
U1-24C
VSS
O1
O4
I2
S
SENSOR 100
RSNSR
CSNSR
R2
R3
(204)
(202)
SC1
SC2
(624)
(620/622)
SC3
(170)
Z1
BTY
Z2
C1

FIG. 24C

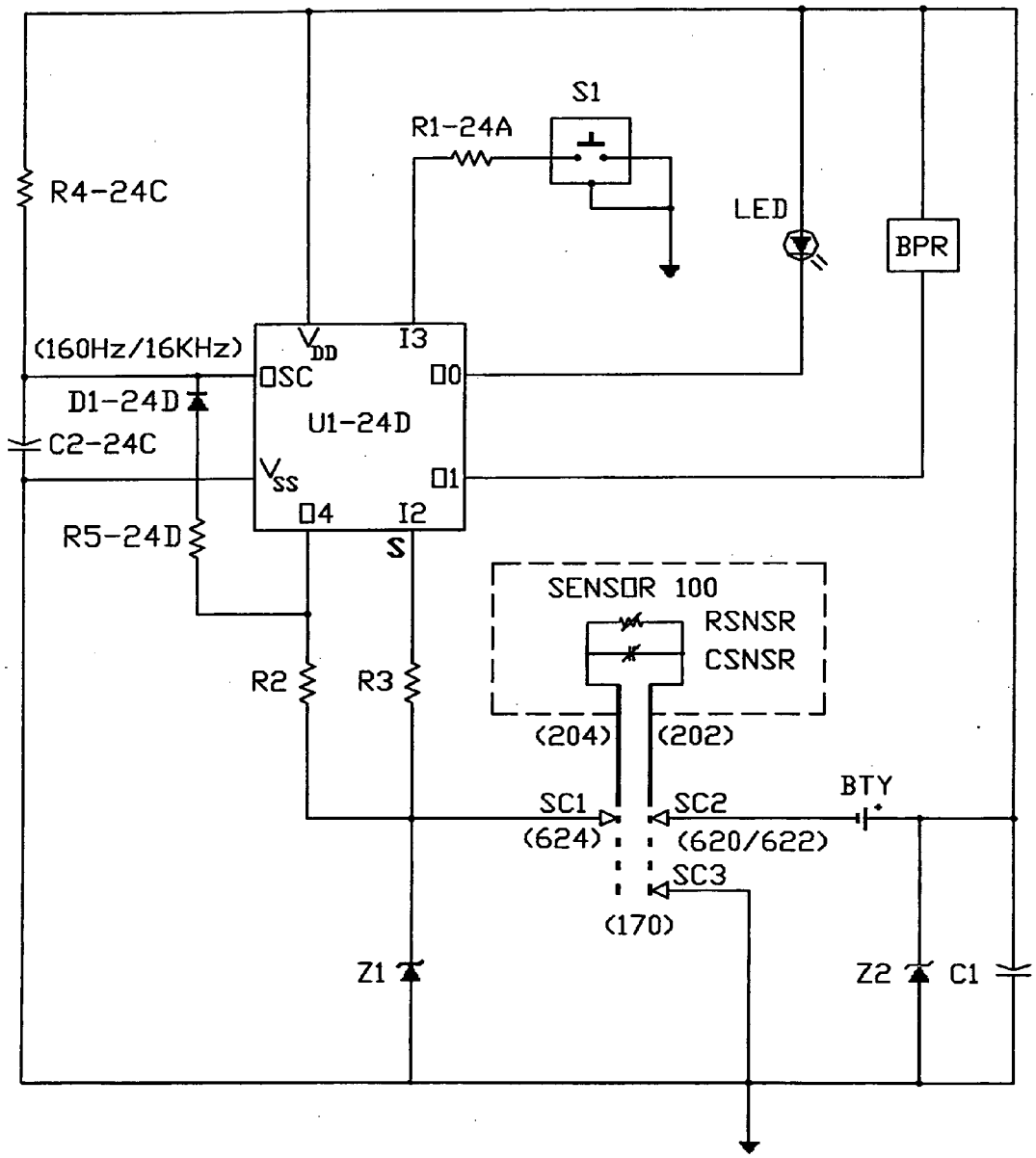
S1
R1-24A
R4-24C
LED
BPR
(160Hz/16KHz)
VDD
I3
SC
O0
D1-24D
U1-24D
C2-24C
VSS
O1
O4
I2
R5-24D
S
SENSOR 100
RSNSR
CSNSR
R2
R3
(204)
(202)
BTY
SC1
SC2
(624)
(620/622)
SC3
(170)
Z1
Z2
C1

FIG. 24D

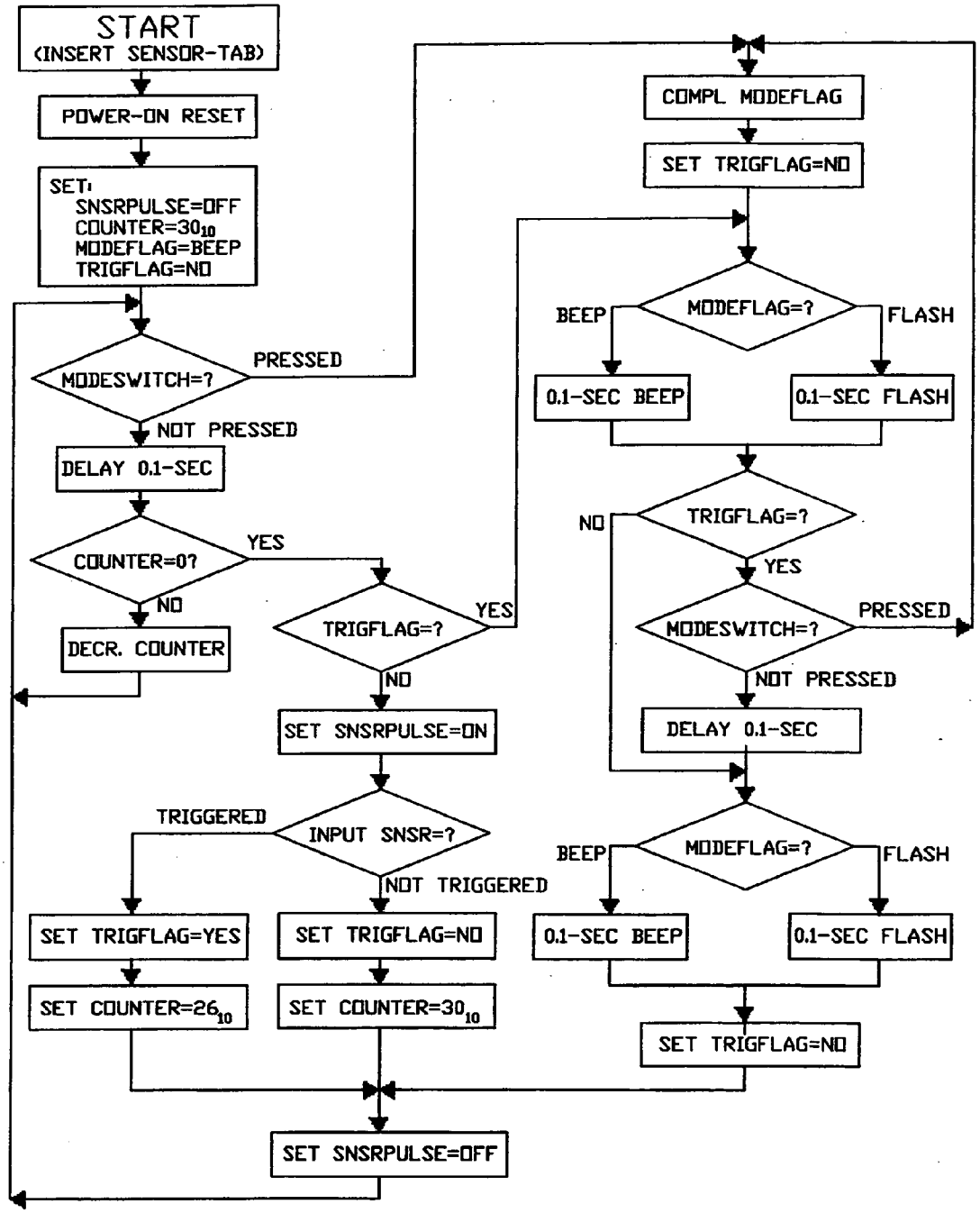
START
(INSERT SENSOR-TAB)
POWER-ON RESET
SET:
SNSRPULSE=OFF
COUNTER=30₁₀
MODEFLAG=BEEP
TRIGFLAG=NO
MODESWITCH=?
PRESSED
NOT PRESSED
DELAY 0.1-SEC
COUNTER=0?
YES
NO
DECR. COUNTER
TRIGFLAG=?
YES
NO
SET SNSRPULSE=ON
INPUT SNSR=?
TRIGGERED
NOT TRIGGERED
SET TRIGFLAG=YES
SET COUNTER=26₁₀
SET TRIGFLAG=NO
SET COUNTER=30₁₀
SET SNSRPULSE=OFF
COMPL MODEFLAG
SET TRIGFLAG=NO
MODEFLAG=?
BEEP
FLASH
0.1-SEC BEEP
0.1-SEC FLASH
TRIGFLAG=?
NO
YES
MODESWITCH=?
PRESSED
NOT PRESSED
DELAY 0.1-SEC
MODEFLAG=?
BEEP
FLASH
0.1-SEC BEEP
0.1-SEC FLASH
SET TRIGFLAG=NO

FIG. 25

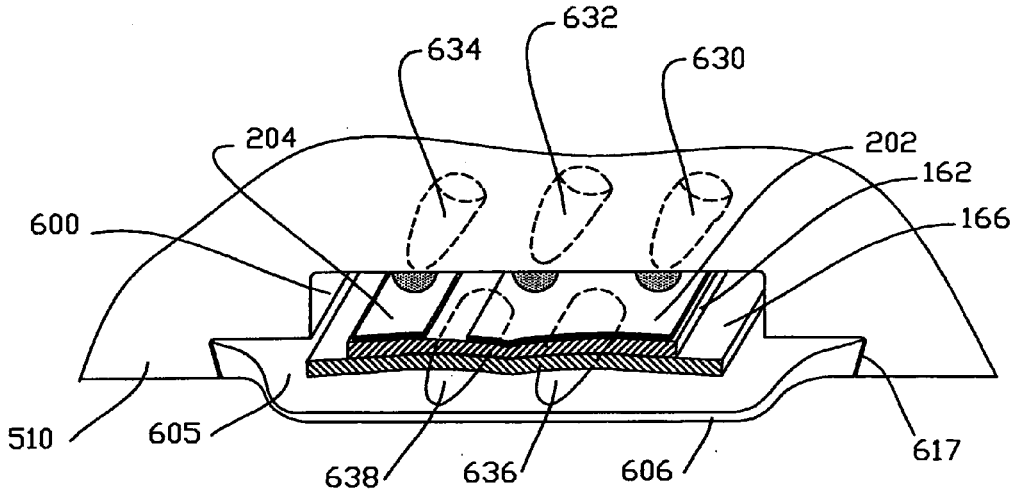

FIG. 26B

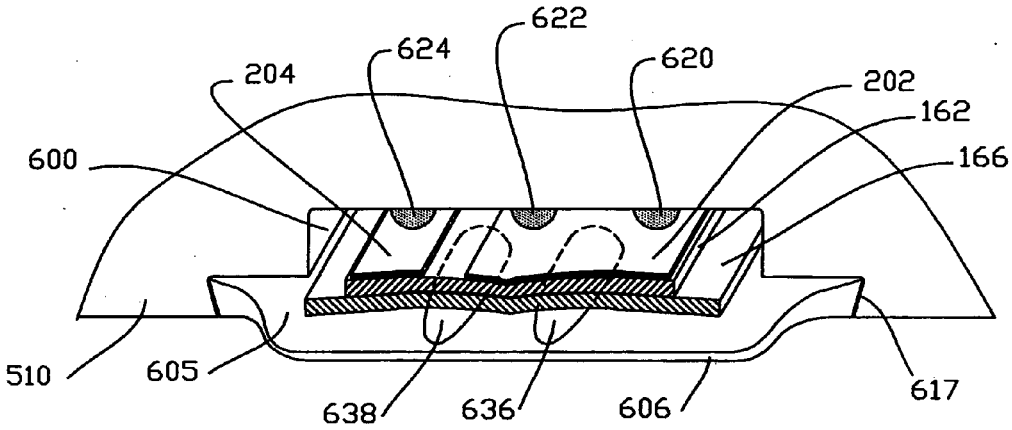

FIG. 26A

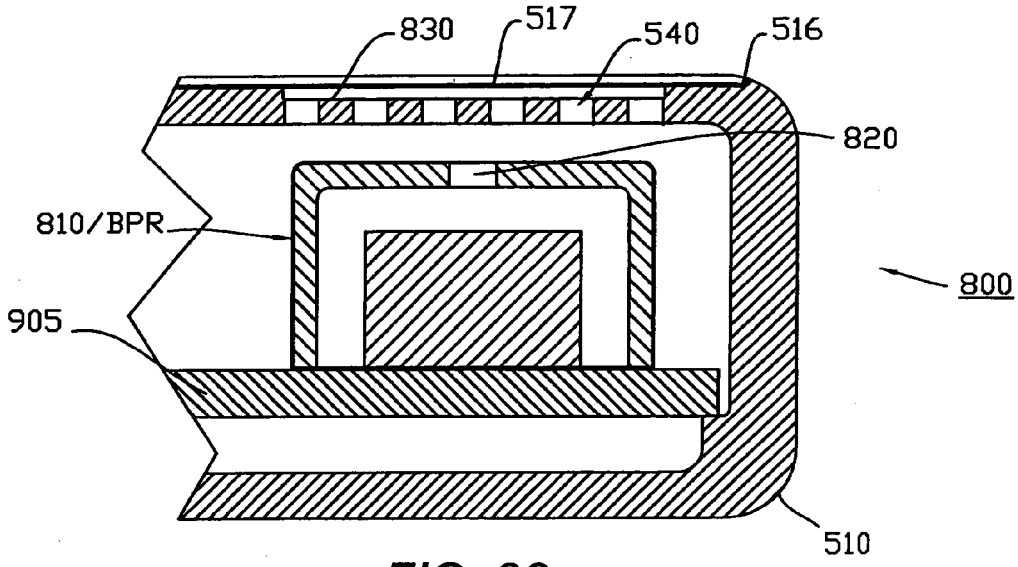
830
517
540
516
820
810/BPR
800
905
510

FIG. 28

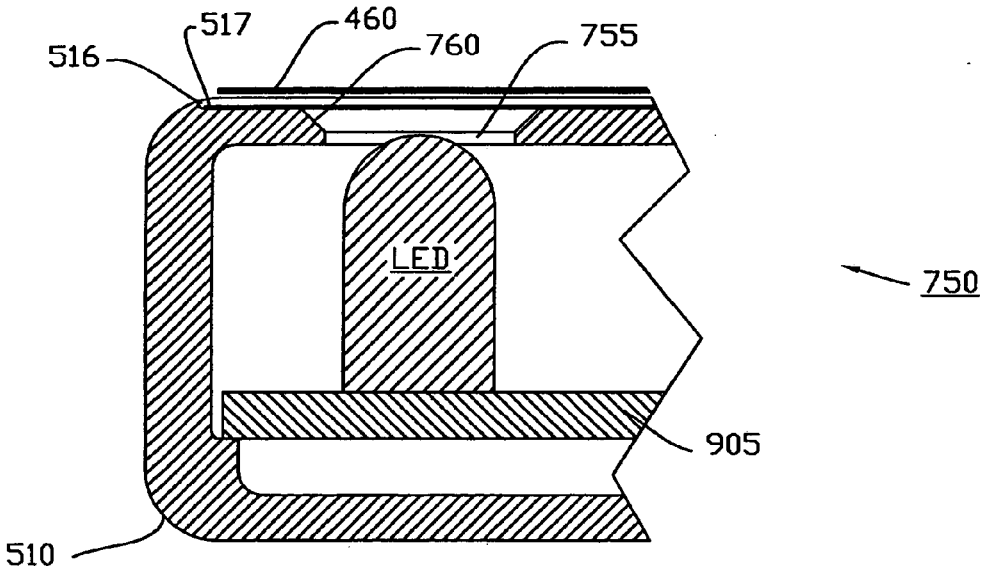
517
460
760
755
516
LED
750
905
510

FIG. 27

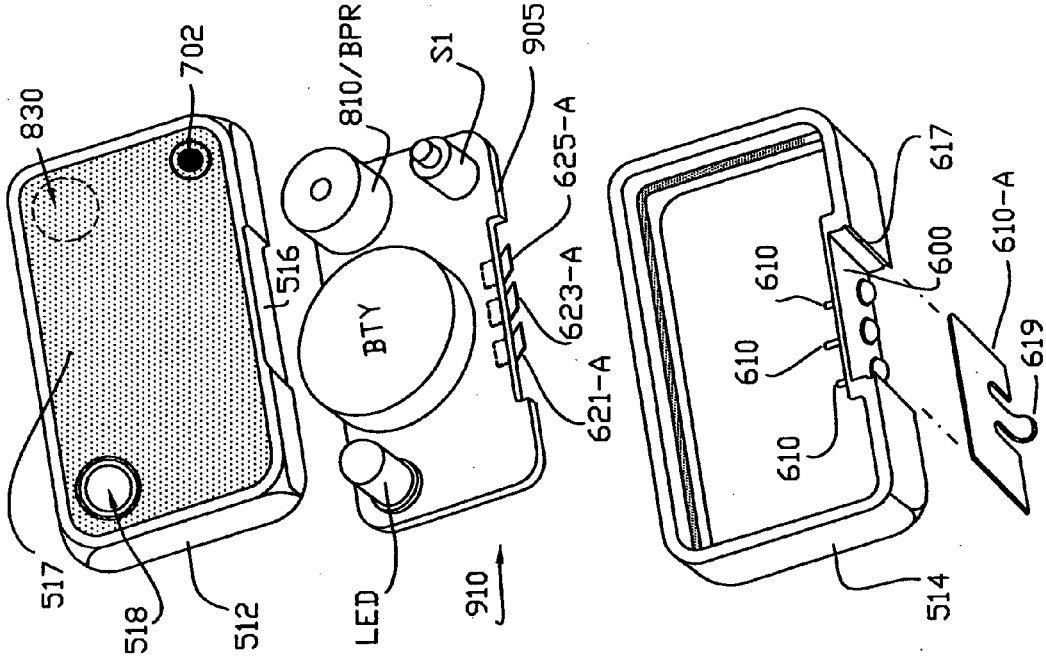

FIG. 29B

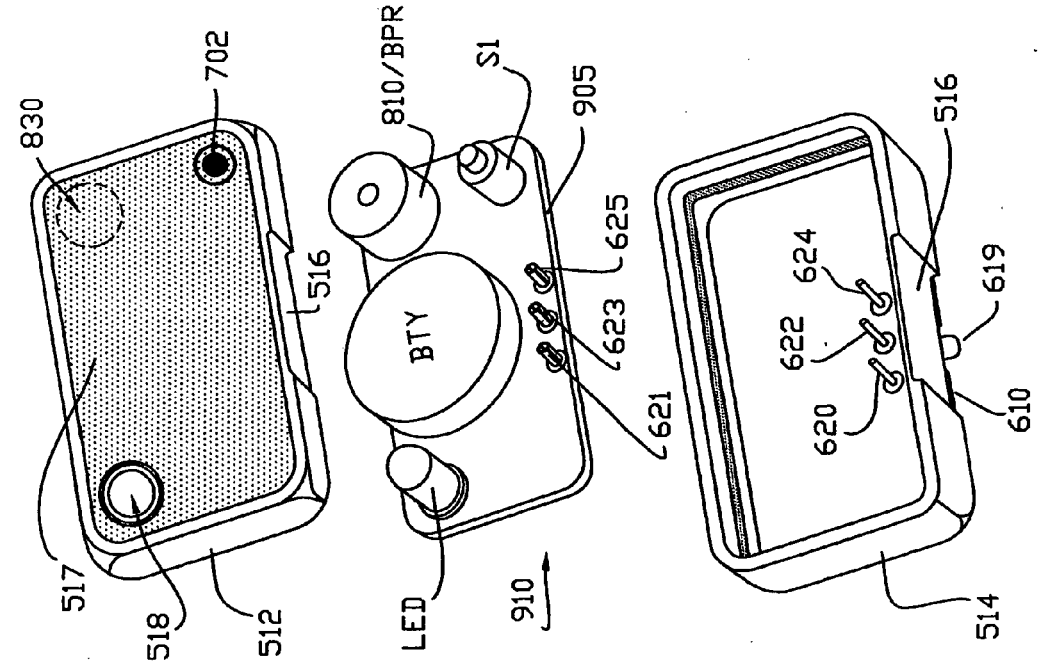

FIG. 29A

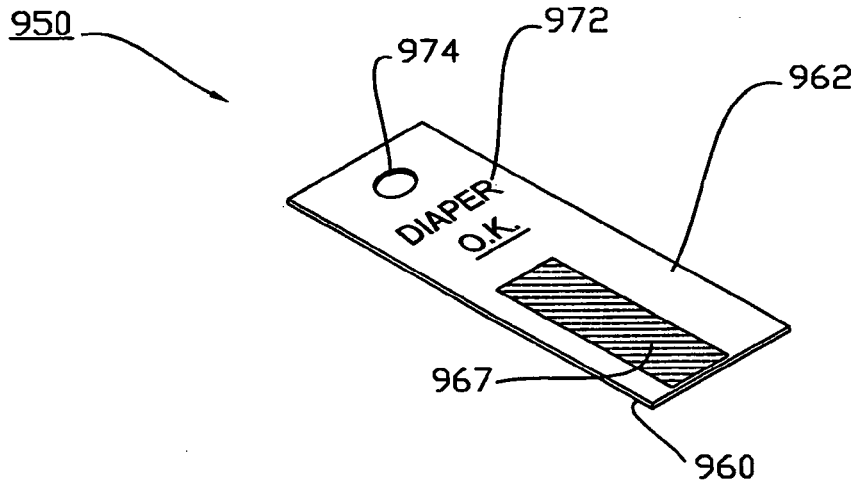

FIG. 30B

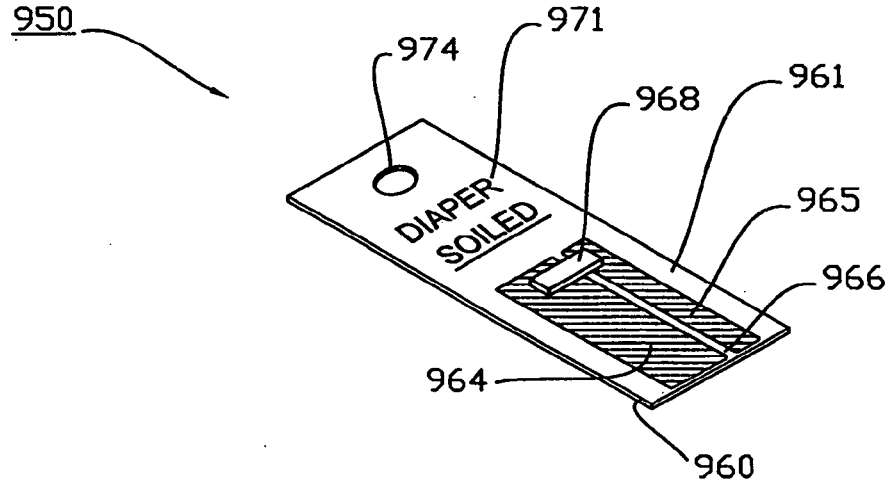

FIG. 30A

ELIMINATION - ABSORBER MONITORING SYSTEM

FIELD OF THE INVENTION

[0001] The present invention relates to systems and devices for monitoring the condition of a diaper, other undergarment, bedding or the like; particularly with regard to the clean or soiled status thereof, and specifically to a sensor and monitor/alarm assembly useful as an elimination-absorber monitoring system.

BACKGROUND INFORMATION

[0002] Inventors have long sought to provide a system of associated devices for effectively monitoring the condition of a diaper, other undergarment, bedding or the like. While the present invention provides an elimination-absorber monitoring system useful in each of these environments, a preferred embodiment is utilized in conjunction with a disposable diaper. Thus, for purposes of brevity in the present specification, the term "diaper" shall indicate any of the above-described use environments, except where otherwise specifically stated or apparent from context.

[0003] The art is replete with examples of prior attempts to satisfy the need for an elimination-absorber monitoring system. Each has, for one reason or another, apparently failed to achieve significant implementation and consumer acceptance. Upon review, the prior systems appear either impractical, unsuitable to the use environment, unworkable and/or uneconomical—largely for one or more of the following reasons: failure to provide an appropriate sensor response or alarm criteria with respect to urine-soiling; inability to detect fecal matter, or to provide an appropriate sensor response or alarm criteria with respect to feces-soiling; lack of important user-oriented features; and unsuitability to cost-effective manufacturing.

[0004] Most previous systems have utilized the measurement of electrical conductivity between two spaced electrodes disposed somewhere on top of, within, or under the absorbent layers of a diaper, to detect the presence of liquid urine when it bridged some path between the electrodes. This approach is described in U.S. Pat. No. 3,460,123 (Bass), U.S. Pat. No. 4,356,818 (Macias), U.S. Pat. No. 4,800,370 (Vetecnik), U.S. Pat. No. 4,539,559 (Kelly), U.S. Pat. No. 4,768,023 (Xie), U.S. Pat. No. 5,036,859 (Brown), U.S. Pat. Nos. 5,264,830 and 5,392,032 (Kline), U.S. Pat. No. 4,205,672 (Dvorak), and U.S. Pat. Nos. 5,266,928 and 5,395,358 (Lu). These systems all depended on the relatively high conductivity of urine, as compared to the typically low conductivity of unsoiled, dry diaper materials. Several of these prior inventors clearly assumed that the key to a useful "diaper wetness" alarm (as their objective was often termed) would be the detection of virtually any urine in a diaper.

[0005] They also recognized that, depending on the sensor configuration, urine could miss the intended target. Thus, variations of this approach incorporated either distributed (e.g., screen-like) electrodes or various absorbent pads or modifications of a diaper to help collect, funnel or direct urine flow to bridge the sensing electrodes, e.g., U.S. Pat. No. 4,356,818 (Macias). However, this focus on the detection of simple "wetness" resultant from urination—as opposed to the far more useful determination that an elimination-absorber actually required changing (or at least inspection)—failed to answer the real needs of caregivers and diaper-wearers. As with all the prior systems, seemingly little emphasis was placed on defining and obtaining truly user-responsive sensor performance. While this simple "wetness detection" focus may have appeared somewhat workable, as applied to certain cloth or early low-absorbency diapers, it did not adequately address the effects of widely differing flow-rates and volumes in various urination events and situations. Moreover, for reasons that shall be explained below, this approach was completely incompatible with the properties (and particularly the much greater capacity) of modern disposable diapers. Thus, previous systems based on simple "wetness detection" typically either failed to work consistently, or were prone to meaningless or premature alarm indications.

[0006] Some prior attempts took the view that a "soiled" diaper condition could be deduced by simply detecting the arrival of urine at the bottom (just inside the outer cover) of a diaper, i.e., that this would indicate when the diaper had reached its absorbent capacity. However, high-absorbency diapers are specifically designed to prevent urine from soaking to the outer cover, at least during the expected wearing time. Because urine permeates into and through a diaper with at least some time delay, additional urine will continue to collect after it first reaches a pair of sensing electrodes. If urine is detected only after soaking to the bottom of a diaper, the continued accumulation will tend to quickly spread along the inside of the cover, and quite likely leak out before the diaper can be changed. Thus, the determination of a fully saturated condition based on the sudden presence of urine at the bottom layers is not practically useful. Even completely non-electronic approaches to diaper monitoring, such as the "happy face" visual indicators incorporated into the outer cover of Fitti™ brand diapers, can similarly suffer from the limitations of over-simplified alarm criteria and inappropriate, inconsistent, or untimely sensor response. Also, such purely visual wetness-indicating devices, which are necessarily disposed directly on a diaper cover, have limited value for other reasons. Just as with traditional methods, they still require frequent and continual checking by a caregiver—and the awkward removal of clothing layers worn over a diaper—to permit viewing of the indicator. They thereby fail to provide a convenient, automatic, attention-getting signal that a diaper needs changing.

[0007] Still other inventors tried to "intercept" the flow of urine somewhere in the mid-layers of a diaper, but as will be appreciated by those skilled in the art, another problem results from the modern disposable diaper being such an aggressive absorber. No choice of conductivity-sensing path within such diapers (including midway through the absorbent layers) is likely to conveniently go from "dry" to fully "wet" at such time as to appropriately reflect a "needs to be changed" condition. In some such diapers, "super-absorbent" particles or polymer jells have been used to dramatically increase the liquid-holding capacity in a central core of the absorbent structure. These central absorbers are typically surrounded by conventional (e.g., cellulose based) absorbent wadding because the super-absorbers tend to react relatively slowly in absorbing liquid, as compared to the conventional materials. This means that the distribution of liquid through the diaper is highly non-uniform and it changes markedly after a urination event, as the super-absorber core gradually pulls liquid out of the conventional absorbent bulk. Also, with intermediate levels of moisture in any type of diaper

(where the absorbent material is not yet completely saturated), urine can accumulate gradually or unevenly—often separated into discontinuous droplets or unpredictably scattered wet or merely damp regions. Thus, these regions may not happen to span a chosen path between electrodes so that the urine can be reliably detected. Moreover, the mere presence of relatively high conductivity (and hence the presence of liquid) along any given path through a diaper may not reflect a true "needs to be changed" condition (i.e., correlate with caregiver expectations or with traditional diaper inspection methods), particularly in the case of modern high-absorbency, disposable diapers. As explained above, none of the foregoing simple conductivity-based systems reflected a truly appropriate sensor response or "alarm criteria" with respect to urine-soiling of diapers. They typically responded either immediately or prematurely to the presence of trivial amounts of urine passing into a diaper; or alternatively, they responded either inconsistently, or not until after the diaper was soaked beyond its safe absorbent capacity—depending primarily on the choice of sensing location.

[0008] Other prior devices have measured AC-conductivity (or related electrical capacitance) across a bulk volume of diaper absorbent material, to achieve more appropriate alarm indications, e.g., U.S. Pat. Nos. 4,704,108 and 4,754,264 (Okada). These methods employed indirect determination of the average "moisture content" or "dampness" in some portion of the diaper absorber. This indirect determination was based on the presumed proportionality of average dampness to directly-measured capacitance or AC-conductivity. Proponents of this approach held that an accurate measurement exceeding a certain fixed threshold value would indicate a urine-soiled condition. They also held that such would be appropriate and sufficient to determine that a diaper needed changing. To be even partially correct, however, this assumption required that the portion of absorbent material actually measured be truly representative of the average dampness in the entire absorber volume. Also for meaningful measurements, that portion would have to be held in a constant shape and position, relative to the sensing means. Furthermore, selecting an appropriate fixed threshold value (that would remain valid with different sizes and applications of diapers) may not be possible. Thus, making sufficiently accurate and meaningful measurements (under all expected conditions) presented serious and unanswered practicality problems. These problems result from variations in measurable conductivity or capacitance due to many factors such as high humidity, perspiration, residual dampness from the washing of soiled skin, and the relative movement and random compression of the absorber as the wearer shifts position—all of which are likely to be experienced in the use environment.

[0009] In U.S. Pat. No. 5,469,145 (Johnson), the use of capacitive coupling of a sensing circuit (disposed on the outside of a diaper) to the material to be measured (inside the diaper) eliminated all direct connection between the monitoring device and the inside of a diaper. However, the described relatively high-impedance capacitor input to a monitor circuit would likely be particularly prone to external electrical noise and interference, as well as to significant capacitance variations due to unpredictable moisture distribution, the presence of other nearby conductive surfaces and physical movement—as the diaper wearer actively and continually shifts position. In short, all the previously described difficulties associated with other distributed dampness measurement approaches would tend to be worsened with the sensing elements moved farther away from the measurement volume. In addition, the use of continuous sinusoidal AC signals for sensing also typically entails greater energy consumption than does the use of DC conductivity methods. In prior systems this has required either the recharging or replacement of batteries, and thus complicated or precluded the use of a permanently sealed monitor unit.

[0010] Moreover, the prior systems were all ineffective for detecting the feces-soiling of diapers. Only a minuscule change in DC-conductivity or absorbent-bulk AC-conductivity (or capacitance) results from a small quantity of fecal matter on the surface of a diaper. This has rendered it typically undetectable by prior methods relative to much larger background changes produced by many of the above-described factors in the use environment. In general, the prior devices' collective inability to reliably detect feces stems from both the physical nature of the sensors and the electronic systems employed with them.

[0011] As described above, prior electronic systems have measured either DC or AC-conductivity or capacitance to detect urine. DC systems for accurately measuring liquid ionic conductivity typically require some "latching" means (such as circuits which detect an initial event and then remain "triggered"), because the applied electric field used for measurement causes dissociation of the very ions that enable electrical conduction, thus decreasing the measured conductivity over time. This effect poses only a minor problem when liquid urine directly bridges two closely spaced contacts, because the sudden initial increase in conductivity is substantial (due to the relatively high uric acid ionic concentration in urine) and this sudden increase can be easily differentiated from the baseline "dry diaper" condition. However, neither proportional bulk moisture content distributed in a diaper, nor the presence of feces, are suitable for direct DC-conductivity measurement. Particularly with feces, the ionic concentration is much lower than with direct liquid urine contact—and the water content, which allows the ions mobility, is often much lower in semi-solid waste. If a steady-state voltage is applied in an attempt to detect feces by inducing a DC current, the ionic dissociation effect results in rapid reduction in measured conductivity. With DC sensing of urine, a reference alarm threshold can be chosen such that the alarm condition will persist for a reasonable time—but probably not in all cases. This approach does not work at all with feces, however, because the initial conductivity is so low—and the decrease is so rapid—that after mere seconds, the conductivity falls below a practically measurable level. If a "latching" electronic detector is used to circumvent this problem—and is made sufficiently sensitive for detection of feces—this type of circuit may be easily triggered by momentary and insignificant conditions. Should this occur in actual use situations with a diaper monitoring system, caregiver intervention would likely be required to reset it. Because the true state of the diaper could not, in such cases, be reliably determined (without reverting to traditional diaper inspection), latching-type detectors are undesirable for use in elimination-absorber monitoring systems.

[0012] An additional problem is presented by the appropriate alarm criteria for feces-soiling. Since a diaper does not

absorb feces and carry it away from direct contact with the skin (as it does with urine), and particularly given the irritation resultant from prolonged contact, feces must be detected virtually at the diaper surface—and a feces-soiled diaper needs to be changed as quickly as is practical. Obviously, for feces detection purposes, the various prior AC bulk-dampness type of sensors were not useful, as their sensing elements focused on a bulk volume of a diaper, not on its surface. On the other hand, a sensor structure involving exposed electrodes placed on the top surface of a diaper, while not only disconcerting to a caregiver, would prematurely respond to the presence of any urine. Such arrangement would also greatly increase the likelihood of false alarms resulting from bridging of the electrodes through either AC-coupling, or direct contact with skin, particularly if damp. As discussed above, feces are relatively very low in conductivity, and are thus difficult for such a system to reliably detect in the use environment. The overall elimination-absorber feces-detection problem is even more difficult, because a truly practical system must effectively combine the determination of both feces and urine-soiling of diapers. Clearly, no prior system has successfully done so.

[0013] The absence of any widely marketed consumer product for elimination-absorber monitoring further highlights the unsuitability of prior inventors' attempts. Today's parents and caregivers are still embarrassed by sniffing our kids and pulling their pants down in public to see whether they need to be changed. Thus, the desire remains for a truly effective, economic, safe, reliable, convenient, and energy efficient system for use with infants and other individuals dependent on a caregiver. These and other objectives, as will become apparent from the following specification and drawings, are satisfied by the present invention.

SUMMARY OF THE INVENTION

[0014] A sensor, for use with an elimination-absorber monitoring system, has sensing means and a flow-baffling layer disposed to preclude direct flow of a liquid to be sensed onto the sensing means. The sensor can also have a first liquid-permeable flow-conducting layer disposed adjacent the flow-baffling layer, opposite the sensing means, to collect and conduct a liquid to be sensed across said flow-baffling layer. A second liquid-permeable flow-conducting layer can be disposed adjacent the flow-baffling layer, opposite the first flow-conducting layer, to conduct liquid from the first flow-conducting layer, around the flow-baffling layer and toward the sensing means. In a preferred embodiment, the first and second flow conducting layers extend beyond the flow-baffling layer and have a portion disposed adjacent and in fluid communication with each other. In a further preferred embodiment, the first flow conducting layer extends beyond the second flow conducting layer and has a portion disposed (or disposable) adjacent to and in fluid communication with an elimination-absorber. In another preferred embodiment, the sensor has a second relatively liquid-impermeable layer disposed opposite the flow-baffling layer, with respect to the sensing means and the second flow-conducting layer, to form a capillary channel within the sensing means. The relatively liquid-impermeable layer is sufficiently wide to preclude direct flow between the sensing means and the elimination-absorber.

[0015] In another embodiment, the sensor has a first series of openings through and disposed toward the outer edges of the flow-baffling layer to conduct liquid from the first flow-conducting layer, through the flow-baffling layer and to the second flow-conducting layer, and a second series of openings through the flow-baffling layer, disposed between the first series of openings and the outer edges of the flow-baffling layer to conduct liquid from the first flow-conducting layer, through the flow-baffling layer, to the elimination-absorber. In this embodiment, the second flow-conducting layer is sufficiently wide to communicate with the first flow-conducting layer through the first series of openings, but not through the second series of openings. It is disposed between the flow-baffling layer and the sensing means.

[0016] In another embodiment of the sensor the second flow-conducting layer is preferably selected from a material that is less absorbent than a dry elimination-absorber, but more absorbent than an elimination-absorber sufficiently welted to require replacement. The second flow-conducting layer is configured in size and materials to delay the conduct of the liquid from the first conducting-layer to the sensing means until the elimination-absorber is sufficiently wetted to require replacement.

[0017] In yet another embodiment of a sensor for use with an elimination-absorber monitoring system, the sensor has a flow-baffling layer disposed to preclude direct flow of a liquid to be sensed onto sensing means disposed beneath the flow-baffling layer, and a series of openings through the flow-baffling layer, the openings being of sufficient size, shape and thickness to permit the passage of a semi-solid or solid material to be detected (such as feces) to contact the sensing means, while deterring contact between the sensing means and the skin of a wearer of the elimination-absorber. It is preferred that the openings be disposed posterior to the sensor portion most likely to be directly impacted by a drop or stream of urine. It is also preferred that to provide a liquid-permeable flow-conducting layer disposed adjacent the flow-baffling layer, opposite the sensing means, the flow-conducting layer be sufficiently absorbent to retain and thereby prevent small volumes of liquid or condensation from penetrating the openings and being detected by the sensing means. The flow-baffling layer is provided with a series of openings disposed adjacent to and in communication with the openings through the flow-baffling layer. The flow-baffling layer is preferably relatively hydrophobic as compared to the flow-conducting (or absorbent) layer, even when the absorbent material becomes saturated, and the flow-conducting layer can be bounded by the liquid-impermeable layer to direct the flow of liquid away from the openings. It is also preferred that a cover layer be disposed adjacent to the flow-baffling layer opposite the sensing means (or in the embodiment including a flow-conducting layer, adjacent the flow-conducting layer's surface farthest from the sensing means), the cover layer having nominally closed slits/flaps covering the openings. These slits/flaps are resistant to passage of urine but displaceable by contact with feces to permit the passage of feces into the openings.

[0018] The sensor of the present invention can be incorporated as part of a disposable diaper or adapted for application to an elimination-absorber, in which embodiment there are provided means for affixing the sensor to the elimination-absorber, and an optional cover layer for separating the first flow-conducting layer from the skin of a wearer of the elimination-absorber.

[0019] In still another embodiment of the invention, there is provided a monitor/alarm unit retainer for use with an elimination-absorber monitoring system, the retainer having an interlocking protrusion and receiving portion respectively disposed on either an elimination-absorber/sensor or an elimination-absorber monitor, the elimination-absorber/sensor having an elastic or semi-elastic flap adapted to be stretched over the monitor/alarm unit and releasably adhered to the elimination-absorber. In a preferred embodiment the flap is of a sufficient size to be stretched over the monitor/alarm unit and over the waistband of the elimination-absorber to be adhered both to the front of the diaper and also to a diaper portion inside the waistband. The retainer is preferably employed with the releasable circuit electrical connector of the invention, which includes a flexible-tab portion and a tab-receiving portion. The tab portion has two or more conductive members disposed on a resilient support. The tab-receiving portion has two or more protruding contacts arranged to engage the conductive members, lateral surfaces for guiding and positioning the tab, and has means to deform the resilient support into a wave-like shape thereby retaining the tab portion while maintaining its orientation and pressure against the contacts to ensure continuous electrical connection of the conductive members with the contacts. This connector has applicability in widely varying environments and systems, and is not intended to be limited to application with the elimination-monitoring system of the invention.

[0020] Also provided is an elimination-absorber monitoring system kit including one or more of any of the sensors of the invention with a monitor/alarm unit, and preferably including a test strip for use in confirming proper function of the system. The monitor/alarm unit preferably includes a power source, an alarm means, an interlocking protruding or receiving portion corresponding with the reciprocal portion on the monitor/alarm unit retainer, a releasable sensor connector (as described above), and electronic circuitry employing relatively narrow, relatively low duty-cycle pulses to measure conductivity or capacitance between a pair of spaced conductors or semiconductors that are disposed within or that span an appropriate measurement path relative to the elimination-absorber to be monitored and actuates the alarm means when the elimination-absorber probably requires replacement. The monitor/alarm unit forms a separate aspect of the present invention. It is preferably provided within a waterproof case enclosing the power source, the alarm means and the electronic circuitry. The releasable sensor connector is preferably fabricated as part of the case. The case has control surfaces with access for the alarm means and control means, the access being sealed by a thin, at least partially flexible membrane.

[0021] In another aspect of the invention there is provided visible alarm means including an electro-optical source disposed in a through-opening that is sealed by a relatively thin, substantially optically-permeable covering. In a preferred aspect, disposed above the visible alarm means covering is a removable or repositionable, relatively thin, light-transmissive, protective or retaining covering layer, flap or pocket of material above. The flap significantly protects, retains and positions the monitor/alarm unit and acts as a rear-projection screen for the electro-optical source, dispersing or de-focusing the relatively narrow light beam from an electro-optical source into a significantly wider beam or viewing angle than that of the source.

[0022] In still another aspect, audible alarm means are located behind a shallow recess in the case disposed behind an audibly transmissive, relatively thin flexible membrane with a sound permeable, structurally supportive, relatively rigid, perforated bottom. The recess allows the membrane to vibrate freely in response to acoustic pressure waves from an electro-acoustic transducer disposed behind the recess but which limits the maximum deflection of the membrane to within its elastic limit thereby protecting the membrane from mechanical damage without excessively attenuating the sound transmission from the transducer during intended operation.

[0023] Control means are provided, disposed through a surface of the case. The control means both changes and indicates the alarm or indicative function selected for the system's operation in response to repeated actuation, where the indication is by means of the visible or audible alarm to emit a representative signal. The control means preferably provides such indication only upon proper connection of an elimination-absorber sensor through the releasable sensor connector.

[0024] Also described is a convenient test-strip device which, when connected to the monitor/alarm unit of the system, can selectively simulate either a soiled or unsoiled elimination-absorber/sensor for test, caregiver-training or demonstration purposes.

BRIEF DESCRIPTION OF THE DRAWINGS

[0025] **FIG. 1** is a top plan view showing the two main elimination-absorber monitoring system components, i.e., a disposable sensor and a reusable monitor/alarm unit. For purely illustrative purposes, these components are shown arranged in linear fashion atop the sensor's protective packaging layer as employed in a preferred, disposable add-on embodiment of the invention. Although a sensor is shown with the monitor unit already interconnected, these components would normally not be combined prior to installation of the sensor on a diaper. Sensors are intended to be pre-installed on diapers, after which the monitor unit is attached when a diaper is needed.

[0026] **FIG. 2A** is a perspective illustration of a preferred embodiment of the system with the sensor installed as an add-on to a disposable diaper. The sensor's strippable top protective layer is shown to the right, as if just removed from the area of the sensor that is folded over the top front of the diaper. Also shown is the reusable monitor unit, as if poised for connection and attachment to the sensor-equipped diaper.

[0027] **FIG. 2B** is a perspective illustration of the system as shown in **FIG. 2A**, where the monitor unit has been connected to the sensor and secured to the front of the diaper, ready for use.

[0028] **FIG. 3** is a top plan view, showing the various superposed layers of the sensor, including its connection and retention means. The sensor is shown disposed linearly, as if laid out on a flat surface, with both top and bottom protective layers removed. The horizontal scale of the figure and the dashed fold line correspond to **FIG. 1**. and to **FIG. 4**. In **FIG. 3**, as well as in most following views of the sensor and its components (but not, of course, in the cross-sectional views), the relative position of the sensor fold line is shown for reference.

[0029] **FIG. 3A** is a close-up cross-sectional view in elevation taken along line A-A in **FIG. 3** (but magnified in scale), showing an embodiment of the feces-responsive structural features of a sensor.

[0030] **FIG. 3B** is a close-up cross-sectional view in elevation taken along line B-B in **FIG. 3** (but magnified in scale), showing an embodiment of the urine-responsive structural features of a sensor.

[0031] **FIG. 3C** is a close-up cross-sectional view in elevation taken along line C-C in **FIG. 3** (but magnified in scale), showing an embodiment of the portion of a sensor that is disposed just outside and on the top front of a diaper when installed for use. For clarity, the sensor's monitor unit locating block is not shown.

[0032] **FIG. 3D** is a close-up cross-sectional view in elevation showing an alternative embodiment having a narrower flow-baffling layer without peripheral openings therethrough, taken at a point similar to that illustrated in **FIG. 3B** (also magnified in scale).

[0033] **FIG. 4** is a side (edge) view in elevation of a complete, preferred add-on embodiment sensor showing all layers. The thickness and vertical separation of each layer is exaggerated, to clarify its relative position and length. The horizontal scale of **FIG. 4** and the dashed fold line both correspond to **FIG. 1**. and to **FIG. 3**.

[0034] **FIG. 5A** is a close-up "exploded-view" perspective illustration of the monitor connecting/locating/retaining portion of the elimination-absorber sensor. (The removable bottom protective layer is not shown.)

[0035] **FIG. 5B** is a close-up side view of a preferred embodiment of the reusable electronic monitor unit, shown mated to the monitor connecting/locating/retaining portion of the sensor. For clarity, the diaper itself and the in-diaper portion of the sensor beyond the fold line (to the left) are not shown. Hidden (dashed) lines indicate the tab connector portion of the sensor as inserted into the connecting portion of the monitor unit, and how a preferred type of locating block of the sensor is captured under the monitor case. Also shown is the sensor flap portion wrapped around and over the monitor to retain it on the top front of the diaper.

[0036] **FIG. 6** is a top plan view of the removable bottom protective layer.

[0037] **FIG. 7** is a top plan view of the lower connecting/attaching layer of the coupling and retention portion of the sensor.

[0038] **FIG. 8** is a top plan view of the monitor unit retaining flap layer of the sensor.

[0039] **FIG. 9** is a top plan view of the monitor unit locating block of the sensor.

[0040] **FIG. 10** is a top plan view of the reinforcing connector tab of the sensor.

[0041] **FIG. 11** is a top plan view of the lower impermeable layer of the in-diaper portion of the sensor.

[0042] **FIG. 12** is a top plan view of elements of the sensor's electrically conductive layer.

[0043] **FIG. 13** is a top plan view of the lower sensor absorbent layer.

[0044] **FIG. 14** is a top plan view of the sensor substrate (upper impermeable) layer.

[0045] **FIG. 15** is a top plan view of the sensor upper absorbent layer.

[0046] **FIG. 16** is a top plan view of the sensor cover layer.

[0047] **FIG. 17** is a top plan view of the sensor strippable top protective layer.

[0048] **FIG. 18A** is a front (faceplate) view of the monitor/alarm unit. (This view corresponds to the "top plan view" of the unit as it is shown positioned in **FIG. 1**.)

[0049] **FIG. 18B** is a top edge view of the monitor/alarm unit, showing the opening of the sensor tab receiving portion.

[0050] **FIG. 18C** is a back view of the monitor/alarm unit.

[0051] **FIG. 18D** is a bottom edge view of the monitor/alarm unit.

[0052] **FIG. 19A** is a close-up (magnified scale) back view of the contact spring clip/plate of the monitor/alarm unit.

[0053] **FIG. 19B** is a close-up (magnified scale) top edge view of the contact spring clip/plate of the monitor/alarm unit.

[0054] **FIG. 20** is a close-up cross-sectional view in elevation taken along line **20-20** in **FIG. 1** (but magnified in scale), showing an embodiment of the releasable electronic coupling and retention portion of the sensor, attached to the monitor/alarm unit. This view also shows the flexible, elastic tab-like male connector portion of the sensor, with the conductive members on its upper surface, attached to the monitor/alarm unit. The tab-like sensor portion is shown as deformed between the monitor unit contact-pins, and the prongs of the spring clip/plate.

[0055] **FIG. 21A** is a close-up perspective illustration of an alternate embodiment re-usable electronic monitor unit and a segment of the tab-like connector portion of an alternate embodiment disposable sensor, shown entering the receiving portion of the monitor unit.

[0056] **FIG. 21B** is a close-up perspective illustration of another alternative embodiment of the monitor unit and the connector tab portion of a corresponding sensor embodiment, shown entering the monitor unit's receiving portion parallel to an edge of the monitor unit, instead of parallel to the back of the unit as in **FIG. 21A**.

[0057] **FIG. 22A** is a perspective illustration of an embodiment of the system with the sensor incorporated directly into a disposable diaper. The monitor-retaining flap portion of the sensor is disposed on the front of the diaper, much like in the add-on embodiment illustrated in **FIG. 2A** and **FIG. 2B**. In **FIG. 22A**, however, the inner diaper surface is modified to replace the cover layer of the add-on embodiment, and the other layers of the in-diaper portion of the sensor are integrated under this surface. The tab connector portion and monitor-retaining flap portion of the sensor protrude from between the inner and outer diaper covers, over or near the diaper's top front edge.

[0058] **FIG. 22B** is a perspective illustration of an alternate embodiment of the monitoring system with the sensor

incorporated directly into a disposable diaper, where the sensor's monitor-retaining flap does not first pass under the back of the monitor unit before wrapping over its front (as in **FIG. 22A**), but instead wraps directly downward over the monitor, to be adhered or otherwise attached to the front of the diaper/sensor below the monitor.

[**0059**] **FIG. 22C** is a perspective illustration of an alternate embodiment of the sensor, also incorporated directly into a disposable diaper similar to that of **FIG. 22B**, but where the tab-like connecting portion of the sensor is designed to enter the monitor unit from the opposite (bottom) end. For use with this embodiment, the monitor unit's receiving portion is located on the bottom edge, rather than as in **FIG. 22B**.

[**0060**] **FIG. 22D** is a perspective illustration of another alternate embodiment of the sensor, also incorporated directly into a disposable diaper similar to that of **FIG. 22C**, but where the tab-like connecting portion is designed to enter the monitor unit's receiving portion parallel to an edge of the monitor unit (as shown in **FIG. 21B**) instead of parallel to the bottom of the unit (as shown in **FIG. 21A**).

[**0061**] **FIG. 22E** is a perspective illustration of a preferred embodiment of the sensor as directly incorporated into a disposable diaper, similar to that of **FIG. 22A**, but where the flap portion of the sensor is disposed on the front of the diaper completely separate from the sensor portion inside the diaper. Also, instead of employing the locating block as shown entrapped under the monitor in **FIG. 22B**, slot-like openings in the flap portion are provided to receive mating ridges on the back surface of the monitor unit for locating purposes. The tab-like connector portion protrudes from the in-diaper portion at or near the top edge of the diaper.

[**0062**] **FIG. 22F** is a perspective illustration of an alternate preferred embodiment of the sensor as directly incorporated into a disposable diaper, showing an alternative monitor/alarm locating block and extended securing flap having separated adhesive areas.

[**0063**] **FIG. 23** is a schematic block diagram of a discrete logic circuit employed in the monitor/alarm unit.

[**0064**] **FIG. 24A** is a schematic block diagram of a microcontroller-based circuit embodiment alternatively employed in the monitor/alarm unit.

[**0065**] **FIG. 24B** is a schematic block diagram of a microcontroller-based circuit embodiment alternatively employed in the monitor/alarm unit.

[**0066**] **FIG. 24C** is a schematic block diagram of a microcontroller-based circuit embodiment alternatively employed in the monitor/alarm unit.

[**0067**] **FIG. 24D** is a schematic block diagram of a microcontroller-based circuit embodiment alternatively employed in the monitor/alarm unit.

[**0068**] **FIG. 25** is a flowchart of the firmware employed in conjunction with a microcontroller-based embodiment of the monitor/alarm unit (as in **FIG. 24A**).

[**0069**] **FIG. 26A** depicts a close-up perspective view of an alternate version of the connector embodiment shown in **FIG. 20**, where a short (sectioned) piece of the flexible, tab-like connector portion of the sensor is shown deformed between the monitor unit contact-pins (on one side) and fixed ramping projections (on the opposite side), instead of by the spring clip/plate used in **FIG. 20**.

[**0070**] **FIG. 26B** depicts a perspective view of another alternate embodiment of the flexible-tab connector means used in the monitor unit and the sensor; where the short (sectioned) flexible, tab-like connector portion of the sensor is shown deformed from both sides between alternating fixed ramping projections of the receiving connector portion, and where any number of projections can be employed, and where any of them can be conductive.

[**0071**] **FIG. 27** is a close-up cross-section view of the high viewing-angle visible display means of the monitor unit.

[**0072**] **FIG. 28** is a close-up cross-section view of the sealed audible alarm means of the monitor unit.

[**0073**] **FIG. 29A** is an "exploded-view" perspective illustration of a manufacturing assembly method employed with an embodiment of the monitor/alarm unit, as is shown in **FIG. 21A**.

[**0074**] **FIG. 29B** is an "exploded-view" perspective illustration of an alternate manufacturing assembly method employed with another embodiment of the monitor/alarm unit, as is shown in **FIG. 21B**.

[**0075**] **FIG. 30A** is a perspective illustration of one side of a sensor-simulating test strip device for use with the monitor/alarm unit.

[**0076**] **FIG. 30B** is a perspective illustration of the opposite side (relative to **FIG. 30A**) of a sensor-stimulating test strip device for use with the monitor/alarm unit.

REFERENCE NUMBERS USED IN THE DRAWINGS AND DETAILED DESCRIPTION

[**0077**] No. Description

[**0078**] **100** Disposable sensor for elimination-absorber monitoring.

[**0079**] **102** Top of sensor **100**.

[**0080**] **104** Bottom of sensor **100**.

[**0081**] **105** Side edges of sensor **100**.

[**0082**] **106** Distal end of sensor **100**.

[**0083**] **108** Proximal end of sensor **100**.

[**0084**] **110** Protective layer (covering bottom prior to installation) of sensor **100**.

[**0085**] **112** Strippable portion of protective layer **110**.

[**0086**] **114** Wrapping portion of **110**.

[**0087**] **116** Releasable adhesive fastening tape for wrapping portion **114**.

[**0088**] **150** Lower impermeable layer of sensor **100**.

[**0089**] **152** Center core of layer **150**.

[**0090**] **154** Upper adhesive of layer **150**.

[**0091**] **156** Lower adhesive of layer **150**.

[**0092**] **160** Channel between elements **202** and **204** of layer **200**.

[0093] **162** Optionally narrowed front portion of layer **150**.

[0094] **164** Front (proximal) end of layer **150**.

[0095] **166** Tab stiffener of assembly **170** of sensor **100**.

[0096] **170** Male connector tab assembly portion of sensor **100**.

[0097] **200** Electrically conductive elements layer of sensor **100**.

[0098] **202** First electrically conductive member of layer **200**.

[0099] **204** Second electrically conductive member of layer **200**.

[0100] **206** Outer edges of elements' **202** and **204**.

[0101] **208** Inner edges of elements **202** and **204**.

[0102] **250** Lower porous/absorbent layer of sensor **100**.

[0103] **252** Elongated feces-detection openings in layer **250**.

[0104] **254** Distal end of absorbent layer **250**.

[0105] **256** Outer edge of absorbent layer **250**.

[0106] **258** Portion of layer **250**, which contacts layer **350**.

[0107] **259** Portion of **250**, corresponding to **258**, which contacts elimination-absorber.

[0108] **260** Second portion of layer **250**, which contacts elimination-absorber.

[0109] **300** Upper impermeable layer of sensor **100**.

[0110] **302** Center core of impermeable layer **300**.

[0111] **304** Upper adhesive of layer **300**.

[0112] **306** Lower adhesive of layer **300**.

[0113] **308** Outer edges of layer **300**.

[0114] **309** Portion of lower adhesive **306** alternatively fixing layer **400**.

[0115] **310** First (outer or "spillway") series of openings in layer **300**.

[0116] **312** Front-most edges of openings **310**.

[0117] **314** Rear-most edges of openings **310**.

[0118] **316** Outermost edges of openings **310**.

[0119] **318** Innermost edges of openings **310**.

[0120] **320** Second (inner or "flow-splitting") series of openings in layer **300**.

[0121] **322** Outermost edges of openings **320**.

[0122] **324** Innermost edges of openings **320**.

[0123] **330** Elongated feces-detection openings in layer **300**.

[0124] **332** Gap through layer **300**, separating absorbent layer **250** from **350**.

[0125] **340** Proximal end of layer **300**.

[0126] **342** Fold line of sensor (where it folds over top front edge of diaper).

[0127] **344** Optional opening through layer(s) **300**/**460** for passage of tab assembly **170**.

[0128] **350** Upper porous/absorbent layer of sensor **100**.

[0129] **352** Elongated feces-detection openings in layer **350**.

[0130] **354** Outer edges of layer **350**.

[0131] **356** Portion of layer **350**, which contacts elimination-absorber at **400**-B.

[0132] **358** Portion of layer **350**, which contacts layer **250**.

[0133] **400** Cover layer of sensor **100** (contacts the skin of a diaper wearer).

[0134] **400**-A Inner (skin-contacting) modified diaper lining of incorporated sensor **100**.

[0135] **400**-B Bulk absorbent portion of diaper having incorporated sensor **100**.

[0136] **402** Top surface of layer **400**.

[0137] **404** Bottom surface of layer **400**.

[0138] **406** Outer side edges of layer **400**.

[0139] **410** Elongated feces-detection openings in layer **400**.

[0140] **412** Line about which layer **400** is folded.

[0141] **414** Line to which layer **400** is folded.

[0142] **416** Side edge portions of cover **400** that are affixed to layer **300**.

[0143] **418** Floating soft edge of sensor **100** (layer **350** covered by layer **400**).

[0144] **450** Releasable electronic coupling and retention portion of sensor **100**.

[0145] **452** Connecting and attaching layer of portion **450**.

[0146] **453** Center core of connecting/attaching layer **452**.

[0147] **454** Top adhesive means of layer **452**.

[0148] **455** Strippable top protective layer of sensor **100**.

[0149] **456** Bottom adhesive means of layer **452**.

[0150] **460** Monitor/alarm retaining flap of sensor **100**.

[0151] **462** Most proximal end of flap **460**.

[0152] **463** Pull-tab portion near end **462** of flap **460**.

[0153] **463**-A Extended length embodiment of pull-tab portion near end **462** of flap **460**.

[0154] **470** Monitor/alarm locating block of sensor **100**.

[0155] **470**-A Alternative monitor/alarm locating features of sensor **100**.

[0156] **470**-B Alternative monitor/alarm locating block of sensor **100**.

[0157] **472** Notch in locating block **470**.

[0158] **474** Top front diaper surface where monitor **500** is retained/connected to sensor.

[0159] **475** Alternative adhesive/adhesion areas for securing flap **460**.

[0160] **475**-A Alternative, separated adhesive areas for securing flap **460**.

[0161] **500** Monitor/alarm unit.

[0162] **510** Protective case of monitor/alarm unit **500**.

[0163] **512** Front portion of case **510**.

[0164] **514** Back portion of case **510**.

[0165] **516** Surface feature of case **510**, emphasizing location of receiving portion **600**.

[0166] **517** Faceplate overlay on **512**.

[0167] **518** Balloon or other graphic symbol on faceplate **517** highlighting assembly **750**.

[0168] **520** Mating feature on back of **500** to engage locating block **470**.

[0169] **530** Top (edge) of case **510** (relative to position on the front of a diaper).

[0170] **532** Bottom (edge) of case **510** (relative to position on the front of a diaper).

[0171] **534** Left side of case **510** (as viewed from front or faceplate side).

[0172] **536** Right side of case **510**.

[0173] **540** Acoustically transmissive opening(s) through case **510**.

[0174] **600** Sensor-connector receiving portion in the lower case half **514** of monitor **500**.

[0175] **605** Pressure-plate of alternative connector means in monitor unit **500**.

[0176] **606** Lead-in lip of pressure-plate **605** or recess **600**.

[0177] **610** Spring clip/plate of monitor unit **500**.

[0178] **610**-A Alternative embodiment of **610**.

[0179] **612** First (e.g., plate-like outboard) prong of **610**.

[0180] **614** Second (e.g., center active spring clip) prong of **610**.

[0181] **616** Third (e.g., plate-like outboard) prong of **610**.

[0182] **617** Dovetail slots or other retention means.

[0183] **618** Attachment means of clip/plate **610** to case **510**.

[0184] **619** Smooth rounded tip of prong **614** of clip/plate **610**.

[0185] **620** First contact pin of monitor unit **500**.

[0186] **621** First contact-pin socket of circuit board assembly **910**.

[0187] **621**A Alternative first contact-pin pressure spring of circuit board assembly **910**.

[0188] **622** Second (center) contact pin of monitor unit **500**.

[0189] **623** Second (center) contact-pin socket of circuit board assembly **910**

[0190] **623**-A Alternative second contact-pin pressure spring of circuit board assembly **910**.

[0191] **624** Third contact pin of monitor unit **500**.

[0192] **625** Third contact-pin socket of circuit board assembly **910**.

[0193] **625**-A Alternative third contact-pin pressure spring of circuit board assembly **910**.

[0194] **630** First contact pin of an alternate connector embodiment of monitor **500**.

[0195] **632** Second contact pin of an alternate connector embodiment of monitor **500**.

[0196] **634** Third contact pin of an alternate connector embodiment of monitor **500**.

[0197] **636** First opposed ramping protrusion of an alternate connector embodiment.

[0198] **638** Second opposed ramping protrusion of an alternate connector embodiment.

[0199] **700** Mode change assembly of monitor unit **500**.

[0200] **702** Dot or other graphic symbol indicating location of mode change assembly **700**.

[0201] **705** Hole through front case portion **512** for flush button of mode-change switch **S1**.

[0202] **750** Visible signal transmission assembly of monitor unit **500**.

[0203] **755** Hole in face surface **516** of monitor **500** for visual signal transmission.

[0204] **760** Chamfered edge of hole **755**.

[0205] **800** Audible signal assembly of monitor unit **500**.

[0206] **810**/BPR Electro-acoustic transducer of monitor unit **500** (also referred to as "BPR").

[0207] **820** Acoustic wave propagation hole in transducer **810**.

[0208] **830** Shallow recess behind overlay faceplate membrane **517** in case **510**.

[0209] **900** Electronic circuitry employed in monitor/alarm **500**.

[0210] **905** Electronics printed circuit board of monitor unit **500**.

[0211] **910** Electronic circuit board assembly of monitor unit **500**.

[0212] **950** Diaper-simulating test-strip device for use with monitor **500**.

[0213] **960** Tab (substrate) of test strip device.

[0214] **961** One side of system test strip device.

[0215] **962** Opposite side (to **961**) of system test strip device.

[0216] **964** First area of conductive coating.

[0217] **965** Second area of conductive coating.

[0218] **966** Gap between conductive coating elements **964** and **965**.

[0219] **967** Area of conductive coating on side **962**.

[0220] **968** Chip resistor or other reference-valued device.

[0221] **971** Indicative marking on side **961**.

[0222] **972** Indicative marking on side **962**.

[0223] **974** Hole or opening through **960**.

[0224] NOTE: Other reference designators that appear only in the electronic schematic diagrams of **FIG. 23**, **FIG. 24A**, **FIG. 24B**, **FIG. 24C** and **FIG. 24D**, and in the text descriptions referencing those diagrams, are not listed above.

DETAILED DESCRIPTION OF THE INVENTION

[0225] The present invention provides an elimination-absorber monitoring system having appropriate "alarm criteria" and detection methods to reliably establish that:

[0226] a significant volume of urine has been rapidly discharged into a diaper, and/or,

[0227] a diaper's remaining ability to absorb has been significantly reduced, and/or

[0228] any feces has been deposited into a diaper.

[0229] The above conditions are defined and automatically detected so as to appropriately correlate with traditional perceptions of when a modern, high absorbency diaper should probably be changed (or at least ought to be inspected) collectively, for purposes of the present specification and claims, referred to as diaper "needs changing" or "needs to be changed." This response not only reflects the criteria of conventional checking, but it leads to diaper-changing at similar intervals.

[0230] Other requirements, identified and provided in the present invention for a disposable elimination-absorber monitoring sensor, pertain to its "feel", appearance and cost. The sensor is comfortable for the wearer, whether incorporated into a diaper or applied to its inner surface before use. It is soft, flexibly compliant and pleasing in appearance. From a cost standpoint, the materials are particularly economical and the sensor design is specifically oriented toward high-speed manufacturing processes such as continuous-strip based assembly methods.

[0231] In addition to providing a sensor system that consistently determines "diaper needs changing" conditions (with respect to both urine and feces soiling) in a manner responsive to the needs of both caregiver and wearer, the present invention additionally addresses certain practical problems with the prior approaches and critical needs that have remained unanswered. The monitor unit produces a relatively pleasant audible alarm that can be heard from a reasonable distance over typical background noise and is compatible with common remote audio baby monitors. Audible alarms, however, are not desirable for night and nap use (or in certain public situations), so an alternative (e.g., visible) alarm that is designed to not disturb a sleeping infant or surrounding people is also provided. The visible alarm is bright enough to be readily seen outdoors in daylight, or through one or more layers of clothing, and over wide viewing angles. Moreover, a caregiver can easily switch the monitor unit between alarm modes, and can do so with one hand, even through the wearer's clothing without needing to remove it. Re-usable monitor units for elimination-absorber monitoring systems will inevitably become exposed to moisture and, when soiled, require cleaning. They are also likely to occasionally be dropped onto hard surfaces while being routinely handled. Thus, a compact, rugged, waterproof case is needed to house the monitor unit circuitry, switching means, and visible and audible alarms and to provide physical and electrical connection to a diaper and sensor. A fully sealed case potentially limits or altogether precludes access for battery recharging or replacement, however, thereby complicating the power requirements for such a device. Therefore, the monitor unit's energy use must be sufficiently miserly for the complete system to be powered throughout its expected lifetime using a single, pre-installed battery. Additionally, a sealed monitor case can also inhibit audible and visual alarm signal transmission as well as complicating the reliable and convenient interconnection of the monitor unit with a disposable sensor. Thus, the system employs innovative means to effectively overcome these problems. The monitor unit attaches to, and can be removed from, the disposable sensor and diaper quickly and easily. It remains securely positioned and electrically connected while in use. A self-test indication of proper operation is automatically given when the system is activated (by means of simply attaching it to a disposable sensor/diaper). This self-test indication also confirms the mode (audible or visible) to which the monitor is set.

[0232] The System

[0233] As illustrated in **FIG. 1**, a preferred embodiment of the elimination-absorber monitoring system includes a releaseably-interconnected, disposable sensor **100** and a reusable monitor/alarm unit **500**. The system is suitable for use with various diapers (reusable-cloth and disposable), undergarments, bedding and the like. A preferred use, i.e., with the sensor provided as an add-on product to be applied to disposable diapers (illustrated in **FIG. 1**, **FIG. 2A** and **FIG. 2B**), is the primary basis for the invention description. Modifications necessary to adapt the system or its components for use in other environments are also described below. For example, **FIG. 22A** depicts the sensor, pre-incorporated as part of a disposable diaper. In such an incorporated embodiment, a removable bottom protective layer **110** of the add-on unit shown in **FIG. 1**, is not necessary. Also, a top cover layer **400** and a top absorbent layer **350** (underneath layer **400**) of the add-on unit can be replaced, respectively, by the diaper inner surface **400-A** (shown in **FIG. 22A**) and an underlying portion of the diaper's absorbent layer(s). As will be described, the novel underlying operative principles and means of sensor **100** can be applied in numerous ways, either to modify the sensor response characteristics, or to achieve other objectives such as manufacturing cost reduction. The sensor can be provided with an adhesive backing, or it can be otherwise affixed in the diaper. As with any high volume disposable product, it is advantageous to employ

biodegradable materials wherever practical. A releasable electronic coupling and monitor-retention portion **450** of the sensor can protrude from the diaper and be disposed on a top front diaper surface **474**, either as in the add-on unit as shown in **FIG. 2A** and **FIG. 2B**, or by utilizing various additions or modifications to a diaper such as are shown in **FIG. 22A**, **FIG. 22B**, **FIG. 22C**, **FIG. 22D** and **FIG. 22E**.

[**0234**] The Sensor

[**0235**] Sensor **100** is typically a multi-layer assembly, resembling a pad or strip, that is applied directly to, or incorporated within a diaper or other article with which it is to be used. A preferred add-on embodiment of the sensor, shown in **FIG. 1**, has a top **102**, a bottom **104**, two side edges **105**, a distal end **106** and a proximal end **108**. Shown to the right of a dashed fold line **342** (indicating the line at which the sensor is designed to fold over the top front edge of a diaper as shown in **FIG. 2A**), is releasable electronic coupling and monitor-retention portion **450**. Portion **450** of the sensor includes means for the attachment and retention of monitor/alarm **500**, and is shown in the close-up perspective view of **FIG. 5A**. The preferred disposable add-on embodiment, as introduced above, is further illustrated in **FIG. 3**, showing the various superposed layers. For clarity, removable bottom protective layer **110** and a similarly strippable top protective cover **455** (shown in **FIG. 5A**), are omitted. The layers of the embodiment of **FIG. 3** are presented in the magnified cross-section views of **FIG. 3A**, **FIG. 3B** and **FIG. 3C**. The relevant locations and orientations of these cross sections are indicated in **FIG. 3**. This embodiment of sensor **100** is also shown (including all layers) in the vertically-exaggerated side elevation view of **FIG. 4**. In **FIG. 4**, the layers include, from bottom to top: removable protective layer **110** (comprised of a releasable adhesive fastening tape **116**, a wrapping portion **114**, and a strippable portion **112**), a lower connecting/attaching layer **452**, a monitor/alarm retaining flap layer **460**, an optional monitor/alarm locating block **470**, a tab stiffener **166**, a lower relatively impermeable layer **150**, an electrically conductive elements layer **200**, a lower porous/absorbent layer **250**, an upper relatively impermeable layer **300**, second porous/absorbent layer **350**, cover layer **400**, and strippable top protective layer **455**. These layers, including the dimensions thereof, will be described in greater detail below, particularly so with regard to the same preferred embodiment. The layers are shown separately in **FIG. 6**, **FIG. 7**, **FIG. 8**, **FIG. 9**, **FIG. 10**, **FIG. 11**, **FIG. 12**, **FIG. 13**, **FIG. 14**, **FIG. 15**, **FIG. 16** and **FIG. 17**, respectively. Just as certain sensor modifications may be required to adjust for different embodiments and use environments, differing size diapers will require that at least some of the dimensions vary (preferably, only the lengths of certain layers), but not necessarily in direct proportion to the differences in diaper size. The detailed description of layers **452**, **166**, **150**, **200**, **300**, **460**, **470** and **455**, comprising releasable electronic coupling and retention portion **450** of the sensor, will be addressed later in the specification. This is so that the layers comprising the "inside-the-diaper" portion of the sensor (as shown to the left of fold line **342** in **FIG. 1**, **FIG. 3** and **FIG. 4**), can be first addressed as a key functional structure.

[**0236**] "Bounding" and the Effects of Adhesives, Coatings and Inter-Layer Attachments

[**0237**] In describing the various layers of sensor **100**, the preferred disposition of adhesive means may optionally be indicated in the layer names, e.g., by calling layers **150** and **300**"double-sided adhesive layers." As will be apparent to those skilled in the art, adhesives can be disposed on appropriate portions and surfaces of various layers including others such as **200**, **250**, **350** and **400**, in order to achieve the proper assembly of the sensor, or alternatively, processes such as heat bonding or ultrasonic or laser welding can be employed to eliminate the use of adhesives. The physical surface-to-surface attachment vs. simple juxtaposition of layers can be significant to the proper functioning of the sensor due to "bounding" effects on the liquid absorbency and flow properties of the porous/absorbent layers. Establishing a boundary, or "bounding" a surface of a thin absorbent layer, by sealing it with an adhesive or other impermeable coating, blocks off air contact across the surface that would otherwise break (reduce) the average magnitude of cross-sectional pore capillary tension that pulls a liquid transversely through the layer. Such bounding causes a liquid to spread more rapidly in the layer—while decreasing or eliminating the layer's surface absorption ability—in other words, its ability to "collect" through the surface that is bounded. For example, completely bounding both the top and bottom of a thin absorbent layer would tend to maximize the transverse or lateral spreading rate of a liquid, but would also eliminate its surface absorbent ability. (Note that the terms, "transverse" and "lateral" will be used interchangeably in this discussion to denote spreading flow in a layer of material, as opposed to "normal" or "through" which interchangeably denote flow "into" or "out of" a layer or layers relatively perpendicular to the approximate plane of the layer(s).) Surface absorbency and lateral spreading rate may be tailored by adjusting the "open area" or percentage of surface that is not bounded (e.g., by providing "pin-holes" or other interruptions in the bounding adhesive or coating, or by use of a dissolvable coating). Lateral spreading can also be accomplished by virtue of the relative permeability or absorbency of adjacent layers, such that the choice of materials employed can determine the primary direction of flow through and around the sensor. Thus, the term "relatively impermeable" is employed to describe layer **300** in order to stress its function of providing a baffle between the sensing means **200** and the origin of liquid to be sensed.

[**0238**] In some cases, as explained above, physical attachment via adhesive is preferable and can contribute to calibration of the sensor for desired alarm response. It also helps maximize through-flow into the diaper. For example, as shown in **FIGS. 3B and 3D**, lower absorbent layer **250**, upper impermeable layer **300**, and upper absorbent layer **350** are preferably adhesively joined by double-sided adhesive on layer **300**, such that adjacent portions **258**/**358** of the two absorbent layers **250** and **350** are maintained in constant, direct contact. In the embodiment of **FIG. 3B**, this contact is through the openings indicated by reference number **320**. This constant and predictable contact is important to the "flow-splitting" characteristics of the sensor, whereby the urine that is initially absorbed through cover layer **400** into absorbent layer **350** wicks laterally across the central portion of impermeable barrier layer **300** and through contacting portions **258**/**358** and portion **356**, preferentially flowing "downward" into the diaper. This preferential through-flow continues until the diaper's rate of surface absorption diminishes (with increasing saturation of its absorbent bulk and/or rapid flow into the surface) below that of absorbent layer **250**, at which point at least a portion (or an increased

portion) of the total flow does not go into the diaper, but instead laterally splits off from the main flow and goes through absorbent layer **250** and therethrough to the conductive layer **200**. Another example of advantageous adhesion of absorbent layers is that the transfer efficiency of relatively high-volume flow through the sensor into the diaper via contact portion **356** (or via a series of "spillway" openings **310** shown in **FIG. 3B**). This is substantially increased by securely disposing contact portion **356** adjacent and in fluid communication with the diaper (or adhering the area surrounding the openings **310** to the diaper surface). This ensures that the upper absorbent layer **350** remains in constant direct contact with the diaper to provide capillary continuity through or around the otherwise impermeable layer **300**.

[**0239**] In other portions of the sensor, however, physical attachment is not preferable. For example, as can be seen in **FIG. 3B**, cover layer **400** can be "free floating" or affixed with respect to the top surface of upper absorbent layer **350**. By leaving layers **350** and **400** juxtaposed but not adhered, they remain unbounded, thus enhancing the ability of layer **350** to quickly absorb an initial flow of urine, and preventing "splash-back" in the region of the diaper covered by the sensor. A lack of adhesion here also contributes to skin-contact comfort and the pliability of the sensor, and thus its conformance to the ever-changing shape of a diaper. This is because cover **400** can readily slide over layer **350**, thereby increasing the flexibility of the entire sensor.

[**0240**] The Bottom Removable Protective Layer of Sensor **100**

[**0241**] Removable protective layer **110** in a preferred add-on embodiment is typically employed as packaging to preserve the cleanliness of the sensor, while permitting it to be folded or rolled. Layer **110** also facilitates application and assembly of the system by providing strippable protection of certain preferably adhesive surfaces of the sensor. As illustrated in **FIG. 4** and **FIG. 6**, layer **110** has strippable portion **112** that releaseably adheres to, and has approximately the same width as (or preferably slightly greater width than), double-sided adhesive layers **300** and **452**. The material used for strippable portion **112** must be consistent with the characteristics of the adhesive to which it must releaseably adhere, such as a thin paper with a nonporous plastic or waxy coating having characteristically low bond strength with the adhesive to be covered. (Such covering material is typically specified for best compatibility with specific adhesive tapes from manufacturers such as 3-M.) Extending on either side of strippable portion **112** is an optional wrapping portion **114**, which extends sufficiently to fold around the entire sensor means **100**. The material used for wrapping portion **114** must be thin, light, foldable, and disposable; such as polyethylene or vinyl sheet, preferably about 0.001-inch in thickness or less. It can optionally be fabricated of the same material as strippable portion **112**, with the attendant advantage of reducing the number of materials required and eliminating a lamination step in the manufacturing process. At one end of wrapping portion **114** is adhesive tape piece **116** for retaining the assembly in a clean folded or rolled condition prior to use. Wrapping portion **114**/**116** may not be needed if sensors are bulk-packaged (e.g., in a plastic bag of sensors stacked flat) and, as mentioned, entire protective layer **110** is not required in a pre-incorporated disposable diaper embodiment of the sensor.

[**0242**] The "Inside-the-Diaper" Portion of Sensor **100**

[**0243**] Lower relatively impermeable layer **150** shown in **FIG. 3** and **FIG. 11**, can serve as means for affixing sensor **100** to the diaper or other environment of use. As illustrated in **FIG. 3B**, layer **150** has a center core **152**, optionally but preferably provided with upper **154** and lower **156** adhesives. Layer **150** also provides structural support, holding electrically conductive layer **200** in place, maintaining elements **202** and **204** nominally parallel and a pre-determined distance apart and also defining a channel **160** therebetween. By being fabricated of liquid resistant or impermeable material(s), layer **150** also serves to trap moisture in channel **160**. Layer **150** also adheres to portions of absorbent layer **250** and therethrough to the remainder of sensor means **100**, which is thereby also affixed to the diaper. The material for impermeable layer **150** is typically a thin (approximately 0.001 inch thick), flexible but dimensionally stable tape of liquid impermeable paper or preferably plastic such as acetate, vinyl, polyethylene, polypropylene, polyester, or the like. Layer **150**, and therefore core **152** is, with the exception of conductive layer **200**, the narrowest layer of sensor means **100**. In a preferred embodiment, as shown in **FIG. 3** and **FIG. 11**, layer **150** is approximately 0.75 inches wide and 0.003 inch thick, with an optionally narrower portion **162** in the front (near end **164**). This narrower portion approximately matches the overall width of electrically conductive elements **202** and **204** of layer **200** so that upper adhesive **154** of layer **150** is not exposed at the front connective end **162** of layer **150** above tab stiffener **166** as shown in **FIG. 5A**. Tab stiffener **166**, shown in **FIG. 3C** and **FIG. 10**, is fabricated from a preferably thicker, stiffer material than core **152** (such as 0.010 inch thick polyester sheet) and is adhered to the lower adhesive **156** of layer **150**. Tab stiffener **166** serves as structural support for layers **150** and **200** and preferably also as an active spring element for the releasable connection between sensor **100** and monitor **500** as shown in **FIG. 5A** and **FIG. 5B**. The combination of tab stiffener **166** with the front portions of layers **150** and **200** comprises male connector tab assembly **170** of sensor **100**, as shown in **FIG. 4** and **FIG. 5A**. As will be further described with respect to the releasable electronic coupling and retention portion **450** of the sensor, this tab assembly also helps locate and retain monitor unit **500** when it is connected to sensor **100** and installed on a diaper for use, as shown in the close-up side view of **FIG. 5B**. As shown in **FIG. 11**, portion **162** of impermeable layer **150** is, in a preferred embodiment, 0.5 inches in width and tab stiffener **166** is preferably 0.75 inches in width which is slightly less than the width of a recessed connector-receiving portion **600** of monitor/alarm unit **500** which receives tab portion **170** of the sensor for electrical and mechanical connection purposes as shown in **FIG. 20**. The material used for upper adhesive **154**, as shown in **FIG. 3A**, **FIG. 3B** and **FIG. 3C**, is selected to form a strong, preferably permanent attachment to conductive layer **200** and absorbent layer **250**. Adhesive **154** should be a non-absorbent, non-transmissive adhesive, like the pressure-sensitive adhesive on typical 3-M "Scotch" brand tapes. Alternatively, it can be a layer of heat melting adhesive, or one or more of the material surfaces themselves can be melted together for attachment. The material used for lower adhesive **156** is selected to releaseably adhere to protective layer **110**; it can be the same as upper adhesive **154**, depending on the nature of strippable portion **112** of protective layer **110**. Layer **150** can be obtained with the

adhesives **154** and **156** already applied or alternatively, the adhesives can be applied as part of the assembly process. Layer **150** may preferably be cut from 0.75-inch wide, double-sticky tape (such as 3-M type 665), which is readily available pre-spooled in the desired width.

[**0244**] In a pre-incorporated disposable diaper embodiment of the invention, lower adhesive **156** can optionally be replaced by alternative means (such as heat bonding or use of a sewn portion or a recessed channel or folds in the diaper's absorbent core material) for receiving/affixing the sensor means in place within the diaper, or the sensor can be instead attached to an inner cover layer or other part of the diaper, as proves most economical for manufacturing.

[**0245**] As illustrated in **FIG. 12**, conductive strips layer **200** has first **202** and second **204** conductive members. Members **202** and **204** each have an outer edge **206** and an inner edge **208**. They are maintained substantially parallel to each other by top adhesive **154** of layer **150**, and (most simply) a fixed distance apart (preferably about 0.010 to 0.125 inch and most preferably 0.045 inch). The materials used for conductive members **202** and **204**, and their dimensions, taken together with those of channel **160** and the material of which they are made, in part determine the sensitivity of sensor **100** and the entire system. Conductive members **202** and **204** can be made of different materials, or preferably the same material, such as laminated thin metallic foil (e.g., 0.001 inch thick aluminum), or vacuum-deposited metal or semiconductor, or printed conductive ink, paint, ionic jell, dissolvable salt or other liquid-enabled conductor, or doped polymer material.

[**0246**] The spacing of conductive members **202** and **204** which defines the width of channel **160** may be set (or even vary) over a considerable range (e.g., about 0.01-0.5 inch), but with suitable compensation in the choice of certain electronic component values in monitor unit **500** to achieve the desired threshold of sensitivity. The conductivity of urine and feces varies over a wide range and careful compromise in the setting of design parameters is required to reliably detect both urine and feces. Even with appropriate component value selection, however, other factors tend to make the preferred range of spacing (as well as conductor width) more limited in practice. In general, too small spacing of channel **160** could cause production difficulty to ensure that the two conductive strips never touch or short (including at end **164** where the sensor attaches to a set of monitor unit connecting contacts **620**, **622** and **624** as shown in **FIG. 5B** and **FIG. 20**). Also, too small spacing increases the susceptibility of the sensor to damage or to irrelevant contaminating particles which might accidentally bridge the conductors. Similarly, condensation from nearby perspiring skin or even high ambient humidity could be troublesome if the spacing is too small. Up to a point, the smaller the spacing, the more electronically noise-resistant the system can theoretically be made, but at the expense of more power consumption because the current flow between the conductors is greater in magnitude during sensing, especially when elimination material is bridging the conductors. On the other hand, too large a spacing necessitates unrealistically high reference impedance to detect the presence of relatively low-conductivity feces, particularly of the drier variety. Larger spacing also means that a series of feces-intrusion openings **252**, **330**, **352** and **410** (as shown in **FIG. 13**, **FIG. 14**, **FIG. 15** and **FIG. 16**, respectively), need to be wider to span both conductors and relatively more feces would need to be present for reliable detection. Too large openings could also undesirably allow the diaper wearer's skin to press into the openings and possibly to touch or even bridge the conductive strips.

[**0247**] Members **202** and **204** can have different widths (about 0.305 and 0.130 inch, respectively, in a preferred embodiment) but preferably the same thickness (typically 0.001-inch or less), to minimize perceivable stiffness and destructive stress in repeated flexure of the sensor. In practicality, both the width and the spacing of the conductive strips may be chosen to coincide with the minimum practical connector spacing and contact overlap at the connector tab portion **170** (as shown in **FIG. 20**). Minimizing the total area of layer **200** is desirable, because the total exposed conductor area, divided by the average conductor gap, is proportional to the total electrical capacitance of the sensor. The higher the sensor capacitance, the greater the electronic and electrical noise susceptibility of the system, and also the greater the required power to operate the sensor. Finally, relatively larger active sensor area (defined by the outer "footprint" of conductive elements **200**) would undesirably result in greater obstruction of flow from source (the diaper wearer) to bulk absorber (the diaper), because lower impermeable layer **150** (which separates conductive strips **202** and **204** from the diaper layers below) allows no direct downward (through) flow anywhere in this lengthwise central area of the sensor.

[**0248**] As previously described, either member **202** or **204** can be the larger or smaller without affecting the function of the sensor means. In a preferred embodiment, the wider conductive strip **202** is preferably used to bridge the pair of contacts **620** and **622** in monitor unit **500** where the ends of the strips are brought out into either a flexible or rigid connector tab configuration (as shown in **FIG. 20**.). This allows the simple insertion of the connector tab portion of the sensor into the monitor unit (as also shown in **FIG. 5B**) to conveniently serve as the only power-on/off control needed in the system. Constant-width over the entire length of the strips is desirable for manufacturing with roll-fed metal foil conductive materials, but is obviously not necessary for either deposited or printed-on conductive strips, in which case the width of one strip could easily be made larger than the other only at the connector end, or the elements of layer **200** could take various other shapes; for example, they could be disposed in lattice or net-like form rather than solid strips, to reduce electrical capacitance and material costs while still covering the necessary areas and providing the desired functions.

[**0249**] As will be further discussed with respect to monitor/alarm unit **500**, the conductive strips are subjected, via releasable connection to the monitor unit circuit, to time-spaced (approximately every 3-seconds) brief (approximately 0.1-sec duration) low-voltage (under 3 v) fast rise-time (preferably less than 1 u-sec) square-wave pulses which are variably conducted by any material in "trap" channel **160** between the conductor strips, to allow a proportional average electrical current (ranging from zero to approximately 1 micro-ampere) to flow between the strips during the duration of each pulse. The magnitude of current depends on the "bulk ionic" and "skin" conductivity of the material bridging the conductor strips as well as the geometry and spacing of the effective current path. A level of resulting current flow

during any of these pulses that exceed a preset threshold level preferably causes the monitor unit to either "beep" audibly or flash a visible alarm to signal the caregiver that the diaper or other absorber needs changing. As previously mentioned, double or multiple pulses are preferred over single ones—for more effective alarm communication to the caregiver.

[0250] As illustrated in **FIG. 3**, and **FIG. 13**, porous, absorbent layer **250** is generally rectangular in shape, somewhat wider than double-sided adhesive layer **150**, and has a series of elongated openings **252** disposed toward its distal end **254**. (These openings can alternatively be described as conduits, channels, passageways, perforations, holes or the like, and are provided for feces-specific detection purposes—as shall be fully explained as the other layers of sensor **100** are described.) The length of layer **250** nominally extends from just over fold line **342**, when installed at the front rim of a diaper, down and throughout the full length of the portion of the sensor that goes inside a diaper. Layer **250** is made of a typically cellulose-based, highly absorbent paper or cloth, or similar natural or synthetic, hydrophilic material of either woven or non-woven composition, the choice of which will depend on manufacturing economics and the purposes to be accomplished by the layer. Its thickness, in a preferred embodiment, is about 0.01-0.06 inch (uncompressed) but may be selected from a considerable range, the choice of which primarily affects the response delay time of the sensor to urination events. Greater thickness increases the relative liquid buffering and volume carrying abilities of the layer, as opposed to the transverse spreading rate of liquid through the layer. The relative width, and particularly the material and composition of absorbent layer **250** also contributes to determine its characteristics, as described below.

[0251] A significant characteristic of liquid-porous (absorbent) media in general, is the average pore size or channel dimension of the material, which, along with the surface tension between the material and a given liquid, determines its average "capillary tension" or relative ability to draw liquid from an adjacent absorbent porous material. A material with relatively smaller average pore or channel size is able to draw liquid from an adjoining volume of similar material having relatively larger average pore or channel size. Moreover, for low viscosity liquids, the smaller the average pore size, the faster a material will absorb liquid because absorption rate is proportional to average capillary tension (measured in units of vacuum), which in turn depends on the average empty-pore surface-to-volume ratio as well as the % of empty pore capacity currently available to hold more liquid (i.e., the available "absorbent capacity", usually expressed as a % by either volume or weight).

[0252] The instantaneous absorption rate across a surface (such as the inside of a diaper) changes, depending on the balance between how rapidly liquid is arriving at the exposed surface (to be absorbed) and how fast it can be wicked away into the bulk of the material's volume. As available absorbent capacity diminishes over time, due to accumulation of liquid throughout its bulk, the maximum (usually initial) absorption rate into the surface is reduced because the average capillary tension is reduced. If liquid arrives at the junction of two materials having substantially different capillary tension, such as the interfaces **259** and **356** (and to a lesser extent **260**, due to being shielded by **300** from direct contact with **350**) between a diaper surface (such as **400**-B) and porous layers **250** and **350** of sensor **100**, relatively more (or even virtually all) of the flow will go into the material with the higher tension (initially the diaper), until the tension of the diaper material eventually drops (due to liquid urine accumulation) to a lower value than that of layer **250**. This "splilting" of the flow may also happen at any time, if the incoming flow is so fast as to "overwhelm" the maximum absorbent rate capacity of the diaper surface, regardless of whether the diaper's total absorbent capacity has become reduced.

[0253] As illustrated, e.g., in **FIG. 3**, **FIG. 3A**, **FIG. 3B** and **FIG. 14**, second relatively impermeable layer **300** is the backbone (and for certain processes the manufacturing substrate) of sensor **100**. As with layer **150**, layer **300** has a center core **302**, optionally but preferably provided with an upper **304** and a lower **306** adhesive, each made of materials similar to, or as described with reference to layer **150**, except that in a preferred embodiment as illustrated, layer **300** is approximately 1.5 inches in width. Also in this embodiment, layer **300** is preferably approximately 0.001-0.003 inch thick, and can be punched from 1.50-inch wide, pre-spooled, double-sticky paper or plastic tape, preferably being relatively liquid impermeable and hydrophobic (i.e., tending to not be "wettable" by aqueous solutions such as urine), and having good dimensional stability, high torsional flexibility and suitably aggressive adhesive (such as type DT-42, manufactured by Manco, Inc. of Westlake, Ohio).

[0254] In the embodiment of **FIG. 3B**, layer **300** is provided with a plurality of openings **310** and **320**, each preferably extending through core **302** and both adhesives **304** and **306**, primarily disposed toward the outer edges **308**. In addition to flow-related functions, this plurality of openings contributes to the mechanical flexibility and compliance of sensor **100**, by reducing the overall stiffness of its combined layers. The first series of openings **310** is preferably symmetrically disposed towards outer edges **308** of layer **300**. While most shapes will serve the function, rectangular or elongated outer openings are preferred. This provides the best balance in the use of available surface area for the impermeable adhesion of layer **400** to layer **300** (along edges **308** as shown in **FIG. 3B**), without compromising either the structural integrity of layer **300** or the sensor's capability to permit rapid liquid flow into a diaper. As shown in **FIG. 14**, each of openings **310** have a front-most edge **312**, rear-most edge **314**, outermost edge **316** and innermost edge **318**. The second series of openings **320** (also shown as being preferably rectangular for similar reasons, although most other shapes could be employed) is preferably symmetrically disposed inward of openings **310** (towards the center of layer **300**), with the centers of the openings approximately co-linear with the midpoints between each front-most **312** and rear-most **314** edge of openings **310**. This relatively staggered disposition of openings **310** and **320** serves to maximize the structural integrity of layer **300** without impeding through-flow. It also helps ensure that, regardless of the path taken by any outward flow across the top of impermeable layer **300**, the flow distance to reach the diaper through openings **310** and over edges **308** will be minimized, while at least some of the flow will be practically certain to enter openings **320** and thereby be conducted into absorbent layer **250**. The outermost edges **322** of second series **320** is positioned closely adjacent the outer edge **256** of absorbent layer **250** and the innermost edge **318** of

openings **310**, most preferably with outermost edge **256** directly aligned midway between edges **318** and **322**.

[**0255**] Through this arrangement, outermost direct contact portion **356** (whether through the first series **310** or not) acts as a "spillway" to conduct liquid rapidly and directly to the diaper, while the innermost direct contact portion **258**/**358** (whether through the second series of "flow-splitting" openings **320** or not) conducts liquid into the absorbent layer **250** and to some extent therethrough to the diaper. The capillary absorbent characteristics of the material employed for layer **250**, relative to the material of the diaper surface, will determine if, and at what rate, such liquid is wicked transversely inward through layer **250** towards channel **160**—as opposed to such liquid being absorbed either completely or partially downward into the diaper through the bottom surface portion of layer **250** (outward of the side edges of shielding/trapping impermeable layer **150**). The arrival of such liquid, wicking laterally inward through layer **250** and thus to channel **160**, will increase the measurable conductivity between members **202** and **204**. Upon reaching an appropriately pre-determined threshold level of conductivity (or change, or rate-of-change of conductivity, or similar change in any other suitable property resulting from the arrival of such liquid), the circuit of monitor/alarm unit **500**, releaseably connected to conductive members **202** and **204**, is effectively triggered. This condition then initiates an alarm indication by the monitor unit that the diaper needs changing.

[**0256**] A third series of openings **330** in layer **300** is preferably shaped like and disposed directly above and in communication with elongated openings **252**, and therethrough to conductive members **202** and **204**. As shown in **FIG. 3**, **FIG. 13** and **FIG. 14**, openings **330** and **252** are preferably disposed along the central portion of sensor **100**, towards the distal end, approximately midway between some of openings **320** and extend laterally outward approximately to a line connecting the innermost portions **324** of openings **320**. It is further preferred to have a matching number of elongated openings **330** and **252**. In **FIG. 3A** it can be seen that, while other shapes will serve the function, the laterally elongated shapes are particularly suited to efficiently conducting semi-solid and liquid fecal matter to channel **160**, thereby directly contacting conductive members **202** and **204** to facilitate the detection of feces, which had heretofore presented considerable difficulties. The location and concentration of openings **330** and **252** only towards the rear, or distal end, of sensor **100** disposes these conduits towards the most likely concentration of feces, and posterior to the most likely origin of urine, and particularly away from directly-impinging streams of urine. This arrangement prevents erroneous pre-triggering of the system, by eliminating the likelihood that directly-impinging urine streams will enter through the feces-selective detection openings to contact conductive layer **200**.

[**0257**] Absorbent layer **250** is bounded by means of adhesive contact on the bottom side with layer **150** (except those portions in direct contact with conductive elements **202** and **204**), and also by adhesive contact on the top side with layer **300**. This bounding causes the lateral spreading rate within layer **250** to be increased and the "capillary trap" nature of channel **160** (defined by the inner edges **208** of members **202** and **204**, the upper adhesive surface of layer **150**, and the lower surface of layer **250**) to be enhanced. Also, because channel **160** is filled with the somewhat resilient porous media **250** (except in the locations of feces-selective detection openings **330** and **252**), a sufficiently strong capillary nature is imparted to channel **160** for retaining the liquid material to be sensed. This "capillary trap" is capable of retaining enough relatively conductive elimination material, long after it initially arrives into the trap, to eliminate the need for any functional "latching" of an over-threshold level of conductivity condition (as measured across conductive elements **202** and **204**) on the part of monitor unit **500**. This feature of the sensor is important because it enables the monitor to have very high electronic sensitivity to the very low typical conductivity produced by bridging the conductive strips **202** and **204** with fecal matter—and yet to operate in a repetitively self-correcting (i.e., "self-reselting" as opposed to "latching") mode in the presence of electrical noise or interference, or any momentary bridging (relative shorting) of the conductor strips for any reason. As mentioned previously, a common problem with electronic sensing devices that "latch" on the momentary attainment of a preset threshold level of any measurable quantity is that they can, particularly if operating at high sensitivity, be inappropriately and permanently triggered by insignificant conditions.

[**0258**] Considering other design aspects involving the interrelationships of layers, layer **150** has to be wider than the overall "footprint" of conductive strips **202** and **204** because otherwise, unless the strips were made of conductive adhesive, there would be no exposed adhesive area to stick to absorbent layer **250** other than in the narrow gap between the strips. If conductive adhesive is used, a non-adhesive portion should be provided at the connector end of strips **202** and **204** (where the strips themselves also function as the sliding connective elements for releasable communication with electronic monitor unit **500** as shown in **FIG. 5A** and **FIG. 5B**). Layer **150** is also preferably sticky on its bottom to adhere the whole sensor to the diaper along the lengthwise centerline. As previously mentioned, this is desirable for secure attachment—and also for adequate conformance by the sensor to the diaper's varying shape. This also helps maintain good capillary contact of the exposed areas of the bottom of absorbent layer **250** (at edges **256** outboard of layer **150**) with the diaper surface—thereby facilitating both maximum urine through-flow and appropriate monitor system response.

[**0259**] In still other interrelating aspects, impermeable layer **150**"protects" the capillary well or trap of channel **160** and also the lateral flow (coming from around impermeable layer **300** and through contact portions **258**/**358** and continuing inward through absorbent layer **250**) from being uncontrollably "robbed", or depleted of urine, by the diaper surface from below. The more exposed surface area **259** of absorbent layer **250** that is in contact with the diaper between layer **300** or flow splitting holes **320** and the outer edges of impermeable layer **150**, the less sensitive the response of the sensor becomes (relative to the diaper surface absorbency), because the lateral flow that would otherwise cause triggering of the monitor unit is relatively more likely to be absorbed into the diaper before it can get to capillary trap **160** between conductive elements **202** and **204**. Conversely, if direct contact portions **258**/**358** or the flow-splitting holes **320** are laterally repositioned relatively inward, to be partially or even completely above impermeable layer **150**, or if layer **150** is made wider, the sensor

response can thereby be changed, if desired, to allow triggering of an alarm after a certain minimum volume of urine has been discharged, with less or even practically no dependence on the remaining absorbent capability of the diaper below. Thus, the sensor can be designed to split flow between itself and a diaper, transferring a proportion of the flow to layer **250** in order to model (as opposed to measure) the effective absorbent capacity of the diaper vis-a-vis the volume of urine discharged; this is particularly advantageous in the add-on (as opposed to the incorporated) embodiments of the invention.

[**0260**] Again referring to **FIGS. 3B and 3D**, the relative width of layer **150** vis-a-vis the lateral positioning of direct contact portions **258/358**, **259** and **260** (or flow-splitting holes **320**) is thus one means usable to easily "fine-tune" the urination-response of sensor **100** to reflect the desired traditional criteria (and to adjust for diaper material properties). "Coarse tuning" can be done by selecting, relative to the diaper materials, the average pore size or other appropriate properties of absorbent layers **250** and **350**. (These layers are made of materials normally available "off-the-shelf" with only stepwise-varying and limited range of absorbency properties.) A preferred combination of parameters must produce the desired response sensitivity and also have sufficient areas for adhesion (or other means of attachment) on layer **150**, with the narrowest possible core **152**. This narrowness is important because the smaller the overall "footprint" of impermeable layer **150**, the more "transparent" the whole sensor can be made to the rapid flow of urine into a diaper—and also, the more flexible and compliant the sensor can be made.

[**0261**] As previously explained, the difference in respective capillary or absorbent tension at the junction of layer **250** and the diaper surface is a key means of "flow-splitting" for the purpose of monitoring diaper condition during and after urination events. However, triggering of the sensor does not necessarily depend on what the overall "degree of saturation" or "filled percentage" of layer **250** itself is at any given time—either as compared to the diaper surface, or absolutely. This is true, because only part of layer **250** needs to reach saturation in a cross-sectional "conduit", of even very small dimensions. This conduit can become gradually filled with sufficient liquid volume, in response to urination events, to reach and trigger the detector means (by bridging members **202** and **204** in channel **160**). Therefore, in an alternate sensor embodiment, even a non-absorbent capillary layer or other liquid transport device could serve the function of layer **250** in conducting liquid to a sensing means, leaving the surface-condition discrimination function to a separate element, or even eliminating it entirely. Because "flow-splitting" in conjunction with liquid transit delay can be employed to somewhat proportionally track the total volume of flow into a diaper (as opposed to, or in addition to, monitoring the diaper's remaining surface absorbent properties), this mechanism can also be exploited to modify the sensor response. For example, if lower absorbent layer **250** is made thicker, relative to its area, it will tend to act more like a "time delay" or "proportional splitting" element, and less like a "tension discrimination" element, because at greater distance away from the diaper surface (vertically), the lateral flow is less affected by the diaper. This is particularly true at the top surface of layer **250** that is bounded by upper impermeable layer **300**. Alternate embodiments of sensor **100** could be configured with materials and dimensions chosen such that the delay in triggering of the sensor after one or more elimination event(s) depends primarily or even completely on the time-delay of lateral propagation as described above (instead of primarily on relative capillary tension of the contacting surfaces). Such arrangement would achieve substantially the same purpose of allowing the diaper to function effectively (i.e., by allowing it to absorb some quantity and/or relatively low flow rate of elimination material during a delay period) before causing monitor/alarm unit **500** to produce an on-going "ready-for-diaper-change" indication. For example, larger portions or even the entire lower surface of absorbent layer **250** can be bounded by an impermeable layer, such that elimination material can enter layer **250** from either above (such as through holes in baffle layer **300**) or alternatively from around a baffle layer. Such material would then travel laterally, over a period of time, to the sensing point, triggering a detector. Holes through the impermeable baffle can also extend through layer **250** and/or the lower bounding layer to allow more of the elimination material to flow through the sensor into the absorber.

[**0262**] In a variation of the preferred embodiment, as suggested above, it is also possible for an upper layer or layers of the diaper itself to serve the purpose of absorbent layer **250**, relative to the rest of the diaper beneath it. In this case, the detector means, such as the conductive strips **202** and **204** in the preferred embodiment, could be disposed on the bottom of impermeable layer **300**. A portion of the same layer **300** could also be adapted to form a relatively narrower tab-like connector structure at its proximal end (either with or without additional laminated layers) to connect with a monitor unit. Such configuration could thereby also eliminate the need for layer **150**. This approach is shown with reference to connector tab assembly portion **170** of the pre-incorporated sensor embodiment in **FIG. 22C**. Such arrangement would not, of course, benefit from the liquid-trapping and shielding effects provided by layer **150** in the preferred embodiment, but it could offer even lower sensor cost. It would also be possible to dispose a material having absorbent properties that are different from the rest of a diaper, under an impermeable layer and in contact with the sensing means (such as conductive elements **202** and **204**), to effectively trap moisture or liquid, thereby serving the function of capillary trap portion **160** and facilitating an appropriate sensor response.

[**0263**] In still other alternate embodiments, any appropriate detector means could be located under (or shielded by) the effective baffle of a relatively impermeable element (such as layer **300**) to receive elimination flow presented through openings in (or around the edges of) such a baffle. This flow would appropriately affect the detector means by causing a change in a suitable measured quantity due to the combination of sufficient liquid accumulation and/or flow. The detector means would then cause an alarm signal or indication to be produced, reflecting a desired set of criteria for appropriately determining the need for elimination-absorber changing (or at least, inspection).

[**0264**] As illustrated in **FIG. 3**, **FIG. 3A**, **FIG. 3B**, **FIG. 4** and **FIG. 15**, porous, absorbent, collecting/spreading layer **350** is generally rectangular in shape, at least the same width as layer **300**, but preferably at least slightly wider to provide direct contact portions **258/358** and **356**, also forming a floating soft edge. Absorbent layer **350** also has a series of

elongated openings **352**, preferably shaped like and disposed directly above and in communication with an equal number of elongated openings **252** and openings **330** for feces-specific detection purposes, as will be further explained below. The materials for absorbent layer **350** may be approximately the same thickness and selected from the same types as used for layer **250**. In a preferred embodiment, however, layer **250** may be designed to have somewhat lower initial absorbency relative to the contacting diaper layers for the purpose of directing urine flow preferentially into the diaper until the diaper's absorbency is significantly reduced. On the other hand, the absorbency of layer **350** is chosen to be as high as is practical, to prevent urine "splash-back" and to readily collect urine flow impinging anywhere on its upper surface. Layer **350** also assists in preventing premature triggering of the sensor by absorbing and buffering a significant volume of urine, and having the capillary or wicking characteristics to rapidly conduct fluid towards the outer edges **354**. Preferably, by bounding absorbent layer **350** by directly adhering it to impermeable layer **300**, or by otherwise coating it with impermeable material, the lateral liquid capturing and/or spreading characteristic of layer **350** is enhanced. Such direct adherence of both absorbent layers **250** and **350** to the bottom and top surfaces, respectively, of impermeable layer **300** also facilitates rapid and predictable flow of liquid through direct contact portions **258/358** or "flow-splitting" holes **320** in layer **300**, by maintaining the mutual capillary contact of absorbent layers **250** and **350** through these holes, as can be seen in **FIGS. 3B and 3D**.

[**0265**] As shown in **FIG. 3A**, urine is prevented from flowing indirectly to the conductive elements **202** and **204** via seepage (i.e., capillary flow) from porous layer **350** through the feces-specific detection openings **352**, **330** and **252**, because these openings in both absorbent layers **350** and **250** are aligned with, (and in some embodiments slightly larger than) openings **330** in layer **300** such that the two absorbent layers do not touch each other through impermeable (and preferably hydrophobic) layer **300**. This capillary gap, as indicated by reference number **332**, eliminates any seepage path for urine through the effectively selective feces-specific detection openings. As will be apparent to those skilled in the art, the manufacturing method used to punch or otherwise create feces detection openings **352**, **330** and **252**, must cut cleanly—so as to not allow capillary fragments of layers **350** and **250** to remain in the area of openings **330** in layer **300**.

[**0266**] It is possible, in an alternate embodiment, for layer **350** to have suitable openings in its surface and to be made wide enough to wrap completely around impermeable layer **300**, and thus also function as absorbent layer **250**. In this case, adhesive could be applied to the bottom outer edges of combined layer **250/350**, or some other means could be used to hold sensor **100** to the diaper.

[**0267**] Impermeable layer **300** can be made similar to or the same width as impermeable layer **150**, so that there is no need for punching either "spillway holes"**310** or "flow-splitting holes"**320** through layer **300**. In this case, suitable adhesive or other means (such as heat-bonding) could be employed to keep the absorbent layers together (at least in places) and also optionally to hold the sensor in good contact with the diaper surface. In an embodiment wherein the sensor is incorporated into a diaper, the surrounding layers of the diaper could serve this purpose. If layer **300** is made narrower to eliminate holes **310** and **320**, layer **300** can still be wider at the proximal end of the sensor forward of some point near fold-line **342**, or it can be affixed to or used with a separate wider assembly for the various purposes of attachment to, location of, and retention of monitor unit **500** at the top front of a diaper. As previously stated, various aspects of the proximal ("outside the diaper") portion of the sensor structure shall be further described later in the specification, with respect to the releasable electronic coupling and retention portion **450**.

[**0268**] As illustrated in **FIG. 1**, **FIG. 2A**, **FIG. 2B**, **FIG. 3**, **FIG. 3A**, **FIG. 3B**, **FIG. 4** and **FIG. 16**, cover layer **400** is the top most layer (when the sensor is installed on a diaper for use). It contacts the wearer's skin and is designed to provide comfort and protection from contact with the other layers. It has a top surface **402**, a bottom surface **404** and outer side edges **406**. Layer **400** must be soft, non-absorbent, and preferably highly porous or liquid transmissive, so as to be minimally obstructive to urine flow, while maintaining a relatively dry surface in contact with the skin. In a preferred embodiment, layer **400** can be made from a hydrophobic material, so that although urine can still be rapidly absorbed through its mesh of openings by layer **350**, the top surface otherwise remains particularly dry. Suitable materials can include, for example, thin (preferably about 0.001 inch thick) webs or meshes of polyethylene, polyester, polypropylene, nylon or other heat-bondable fibers, as well as other polyolefins such as copolymers of polypropylene and polyethylene, or of linear low-density polyethylene. Webs are typically composed of micro-perforated film sheet or may be spun, woven, blown, foamed or otherwise fabricated. Composite materials combining, for example, thin non-woven fabric underlying a micro-perforated polymer film sheet or spun net or web can be employed to provide a comfortable, cushioned surface for skin contact. In an alternate embodiment, it is possible for such a composite form of layer **400** to effectively also serve as absorbent layer **350**, thereby reducing the number of component layers.

[**0269**] As illustrated in **FIG. 16**, **FIG. 3A** and **FIG. 3B**, cover layer **400** is preferably somewhat wider than layer **350**, in order to be folded around the outside of that layer. In this preferred embodiment, cover **400** (when folded) effectively defines the overall width of the sensor portion that is to be disposed inside a diaper. Edges **406** of layer **400** are folded over at the locations of outer phantom lines **412**, encompassing the outer edges **354** of layer **350**, and continue to the locations of inner phantom lines **414**. As shown in **FIG. 3B**, a portion **416** of the folded edges of layer **400**, somewhat smaller than the dimension between phantom lines **412** and **414** (shown in **FIG. 16**) ultimately covers (by being adhered to) the portion of upper adhesive **304** of impermeable layer **300** that extends outward from edges **316** of openings **310**. As previously mentioned, the portions of layer **400** and layer **350** that extend outward beyond edges **308** of layer **300** provide a pair of floating soft edges **418** for the sensor. Portion **416** must not cover the outer-most direct contact portion **356** or the row of openings **310** in layer **300**, so that cover layer **400** does not interfere with or provide additional material through which urine must pass in flowing from collecting/spreading layer **350** into the diaper.

[**0270**] The lower adhesive **306** on the bottom of layer **300** helps to maintain the direct capillary contact of absorbent

layer **350** with the diaper surface below the sensor, whether through direct contact portion **356** or holes **310**, thus facilitating the flow of urine from layer **350** directly into the bulk absorbent layers of the diaper. As can be inferred from **FIG. 1** and the side view of the layers in **FIG. 4**, the exposed portions of bottom adhesive **306** (not indicated explicitly in **FIG. 4**) of layer **300** are covered by strippable protective portion **112** of layer **110**, which is intended to be removed prior to installation of sensor **100** on a diaper. In an alternate embodiment (as can be inferred from **FIG. 3B**), edges **406** can be folded to encompass layer **300** as well as layer **350**, and thus to be adhered instead to portions **309**. (outboard of edges **316**) on the bottom of layer **300**. In such case, portions **309** of lower adhesive **306** would not be available to stick the outer edges of sensor **100** to a diaper, as in the preferred embodiment. As will be apparent to those skilled in the art, the method chosen for combining or attaching cover **400** and layer **350** to layer **300** will depend on the manufacturing economics and relative advantages of using pre-adhesive tape materials versus selectively applying adhesives or of additionally employing other means such as heat bonding. In order to minimize high-volume manufacturing cost, it may well prove generally preferable to employ heat bonding or other means, instead of adhesives, for assembly of sensor **100**, and to use adhesives primarily for the user-performed attachment and retention applications. In any case, however, it is desirable that the outermost portions of the sensor (except for any floating edges such as **418**) be maintained in constant contact with the diaper surface. This effectively prevents the sensor from becoming uncomfortably bunched or creased inside the diaper. As described previously, it also improves efficient liquid conduction through the sensor. Edge adhesion additionally helps maintain good contact of the exposed portions of the bottom of layer **250** with the diaper surface, thus increasing the sensor's responsiveness to diaper condition.

[**0271**] As illustrated in **FIG. 1**, **FIG. 3**, **FIG. 3A**, and **FIG. 16**, layer **400** also has a series of elongated openings **410**, preferably shaped like and disposed directly above and in communication with elongated openings **252**, **330**, and **352**. These aligned openings offer direct conduits to the upper surfaces of electrically conductive members **202** and **204** for feces-specific detection purposes. In one embodiment, openings **410** are slightly narrower than openings **252**, **330** and **352**, or can be merely slits pre-cut through the material of layer **400** in order to provide additional protection against either urine-splash entrance, or direct contact between conductive layer **200** and the skin. The material of layer **400** is preferably sufficiently thin and flexible for openings **410** to be readily moved apart by the presence of feces, thus facilitating the efficient collection and intrusion of such material first through layer **400**, and then through aligned openings **352**, **330** and **252** and therethrough directly into contact with layer **200** upon elimination. In various embodiments, slits **410** can be adapted into flaps that remain nominally closed when feces are not present. In still other embodiments, somewhat wider openings can be used, or a series of small, possibly non-elongated openings of any shape could serve the function described. Regardless of the number, shape, or width of openings **410**, each such opening must have at least one dimension sufficiently narrow with respect to (e.g., very roughly equal to) the overall depth of the aligned series of openings beneath it (as is determined by measurement of the minimum compressible assembled thickness of layers **400**, **350** and **250**). Such aspect ratio of the aligned openings effectively eliminates the possibility of a diaper wearer's skin ever being pressed into openings **410** deeply enough to touch members **202** and **204**, and thereby compromise sensor performance—although such occurrence would not, in any case, be harmful to the wearer.

[**0272**] Functional Summary: Urination-Response in a Preferred-Embodiment Sensor **100**

[**0273**] As discussed above (and referring to **FIG. 2B** and **FIG. 3B**), urine that is produced by the wearer of a sensor-equipped diaper is most likely to impinge on, and can readily pass through, cover layer **400** into absorbent layer **350**. Layer **350**'s permeable, flow-collecting and lateral spreading material, preferably bounded at its bottom by adhesive contact with impermeable layer **300**, can itself absorb small discharges of urine, while the top surface of cover layer **400** remains essentially dry. Higher volumes of urine rapidly spread throughout layer **350**, and inevitably outward, where portion **356** (or in the alternate embodiment "spillway" openings **310**) facilitate direct passage into the diaper. (Still higher rates of flow are easily accommodated over side edges **354** and **105**.) The direct contact portions **258**/**358** (or second series of "flow-splitting" openings **320**) through layer **300** provides direct capillary contact for liquid transfer between absorbent layers **350** and **250**, which also facilitate through-flow of urine into the diaper until such time as the diaper surface's absorbent properties become significantly degraded, relative to those of lower absorbent layer **250**. When this occurs (or, in an alternate embodiment, after sufficient delay or after sufficient flow volume) urine can also be conducted towards channel **160** between conductive members **202** and **204**, to bridge the gap therebetween, thus triggering releaseably connected monitor/alarm **500** at a time when the diaper's surface absorbent capabilities becomes significantly reduced, either due to total accumulation of urine, or to significantly high rate of urine flow (or optionally after a desired delay time). The capillary trap nature of channel **160** serves to "latch" such a triggered condition for an extended period (up to many hours).

[**0274**] Functional Summary: Defecation-Response in a Preferred-Embodiment Sensor **100**

[**0275**] As discussed previously (and referring to **FIG. 2B** and **FIG. 3A**), sensor **100** responds selectively, yet immediately, to the presence of virtually any significant deposition of feces into a diaper. This response is distinctly different from the sensor's urination-related response as described above. Fecal matter deposited on the top surface of the sensor-equipped diaper is collected by means of the inevitable intrusion of such material into and through the sensor's aligned series of shallow, strategically disposed, elongated feces-specific detection openings **410**, **352**, **330** and **252**, to directly contact and bridge conductive elements **202** and **204**, which are connected to monitor unit **500**. The diaper wearer's skin cannot penetrate these openings, because of the narrow gaps or nominally-closed slit-like elongated openings employed, relative to their depth. (Details of the electronic methods employed in monitor/alarm unit **500**, to reliably detect even small quantities of low-conductivity fecal matter, shall be fully described with respect to the monitor unit later in the specification.) The described feces-specific detection structure and means employed by sensor **10** are specific to fecal matter, i.e., they do not compromise

the previously-described urination-response, for two main reasons. Firstly, as previously described, the capillary flow properties of these aligned feces openings in the sensor effectively preclude the indirect seepage of urine from the upper absorbent layer **350** and through these openings to reach elements **202** and **204**. Secondly, direct streams of urine are physically unlikely to target these openings, due to inherent physiological limitations on the origin and direction of such streams emanating from the wearer, relative to the disposition of the feces openings of the sensor. The relative location of these openings are disposed advantageously posterior (even if close) to the most likely position of the diaper-wearer's perineal mid-line, to function as intended with both males and females.

[**0276**] Adjustment of the Composite Response of Sensor **100** to Reflect User Criteria

[**0277**] As previously described, adjustment of sensor response to correctly reflect traditional criteria for diaper-changing may be easily accomplished by means of altering the absolute and/or relative dimensions of the components, and/or selecting materials with varying absorbency and flow properties, and/or by selectively using adhesives or other bounding coatings on appropriate surfaces (or portions of surfaces) of the various layers to control the relative rate of liquid surface absorbency or liquid loss out of a layer vs. lateral spreading flow rate within that layer, or to control the time delay of flow to a detecting means as will be appreciated by those skilled in the art, particularly in view of the present specification.

[**0278**] The Releasable Electronic Coupling and Retention Portion

[**0279**] As shown in **FIG. 2A**, sensor **100** extends forward, inside a correspondingly-sized diaper, from a point somewhat below the back "rim" up and over the front rim, where the layer structure is different from the "in-diaper" portion previously described. A proximal end **340** of layer **300** extends beyond fold-line **342** (also shown in **FIG. 3**, **FIG. 4** and **FIG. 5A**). As previously defined, this line indicates approximately where the sensor is to be folded over and affixed to the outside diaper portion **474**. Once applied to portion **474**, the sensor is designed to conveniently align with, connect to, and securely retain electronic monitor/alarm **500** (as shown in **FIG. 2B**). The unique attachment of the monitor unit by portion **450** ensures that, in the use environment, it is typically difficult (and therefore unlikely) for the monitor to be removed or have its operation compromised by the diaper-wearer. It is also designed, however, to facilitate easy removal of the monitor by a caregiver after the diaper is soiled, so it can be applied to the next diaper.

[**0280**] As illustrated in **FIG. 5A**, the proximal ends of conductive members **202** and **204**, supported on portion **162** of layer **150** and tab **166** (and thereby comprising connector tab **170**), are accessible where they extend past proximal end **340** of layer **300**. At end **340**, tab **170** preferably protrudes upward at an angle away from connecting and attaching layer **452** (shown in **FIG. 3**, **FIG. 3C**, **FIG. 4**, **FIG. 5A**, **FIG. 5B** and **FIG. 7**).

[**0281**] Layer **452** is made of thin, preferably impermeable material, and functions to connect layer **300** to monitor-retaining flap **460**. This flap is essentially an extension of layer **300**, which is provided for purposes of wrapping and retaining the monitor unit. Layer **452** is provided with top **454** and bottom **456** adhesive means. Bottom adhesive **456** is covered (before installation on a diaper) by the proximal part of removable strip **112** of protective packaging layer **110**. (Layer **110** is not shown in **FIG. 3** or **FIG. 5A**, but it is shown in **FIG. 1** and **FIG. 4**.) Layer **452** can preferably be a double-sticky tape with a center core **453** of thin (approximately 0.001 to 0.003 inch thick) sheet paper or plastic like polyethylene, polyester or other suitable substrate material such as used for layer **300**. The adhesive means can similarly include brushed, rolled or printed-on adhesives, heat melting, or ultrasonic, laser or other bonding processes to eliminate possible cost and other issues related to the use of pre-sticky tapes. Bottom adhesive **456** is provided to affix sensor **100** (and also indirectly, monitor unit **500**) to portion **474** of a diaper. (This area is typically already plastic-coated on most brands of diapers for adhesion of the side-closure tapes, flaps or tabs, etc.)

[**0282**] Flap **460** is formed of a thin, preferably somewhat elastically stretchable, and transparent or translucent material. This combination of properties facilitates wrapping, and thereby retaining, monitor/alarm **500** on diaper portion **474**, while permitting transmission of visual and/or audible alarm signals. Flap **460** is preferably made from clear, or translucent vinyl (about 0.001-0.003 inch thick), although other plastics like polyethylene or irradiated PVC (such as "shrink-wrap"), or even materials such as woven or non-woven natural or synthetic fabric could be used, provided the selected material has the necessary optical, acoustic and elastic properties, and is compatible with the adhesive means employed. In use, flap **460** is ultimately wrapped completely around monitor unit **500** from under its back side, over the front and top of the unit, and is then affixed to the exposed upper adhesive **304** of layer **300** (as can be inferred from **FIG. 2B** and **FIG. 5A** and is shown in **FIG. 5B**). Thus, flap **460** is adhered to layer **452**, which is in turn adhered as an extension of impermeable layer **300** for affixing portion **450** to the outside front of a diaper (as previously mentioned). The location of layer **460**, vis-a-vis impermeable layer **300** and connective/adhesive layer **452**, can be adjusted to facilitate production assembly of the sensor, depending upon whether adhesive is selectively applied to components during the manufacturing process, or if pre-adhesive tape materials are used in conjunction with the application of a non-adhesive layer to create flap **460**. Preferably, as shown in **FIG. 3** and **FIG. 4**, the lengths of layers **300** and **460** are adjusted to allow tab portion **170** to protrude through a minimal gap in the otherwise end-to-end junction of these two layers. Disposing flap layer **460** between tab assembly **170** and layer **452** offers the additional advantage of shielding assembly **170** (and also the bottom of the monitor unit when installed) from layer **452**'s top adhesive **454**. In alternate embodiments of the sensor, flap **460** can be fabricated as a continuous extension of layer **300**, provided that layer **300** has the necessary properties, as previously mentioned. Also, upper and lower adhesives **304** and **306** of layer **300** would then need to be selectively applied from the distal end, to somewhat beyond fold line **342**, so the flap end portion would not be sticky. If layer **300** and flap **460** are combined as the same continuous piece, a suitable opening **344** in layer **300**, as shown at location "(**344**)" in **FIG. 5A**, can be punched to provide the necessary path to make connector tab portion **170** accessible for connection with monitor **500**.

[0283] As shown in **FIG. 5B**, the most proximal end **462** of flap **460** preferably protrudes beyond the proximal (and non-sticky) end of layer **400** to serve as a small pull-tab portion **463** for releasing monitor/alarm **500** from sensor **100** when changing the diaper. The proximal end of layer **400** is fastened to upper adhesive **304** of layer **300**, creating a smooth transition. The location and size of portion **463**, vis-a-vis the preferably strong adhesive bonds that hold flap **460** to exposed top adhesive **304** of layer **300**, and also that hold bottom adhesive **456** of layer **452** to diaper portion **474**, ensure that tab **463** is, as mentioned previously, particularly awkward and difficult for a diaper-wearer to remove, yet is easily manageable by a caregiver. As shown in **FIG. 22F**, in another preferred embodiment, flap **460** is of sufficient length **463**-A to extend over the waistband of the diaper (i.e., back beyond fold line **342**) to be affixed inside the waistband, further removing the pull-tab from reach of the diaper wearer and providing additional shielding from foreign matter that may be dropped onto the system from above. The flap **460** may also be adhered via separated adhesive portions **475**-A disposed towards both edges of the flap, leaving an unadhered central portion of flap **460** providing room for the insertion of a caregiver's finger to facilitate removal, while remaining relatively inaccessible to the diaper-wearer.

[0284] In various embodiments of sensor **100**, either of lower **250** or upper **350** porous layers can also protrude proximally over fold line **342**, to provide a more cushioned and comfortable edge (to the diaper-wearer), and to minimize bending stresses on the conductive layer **200**. Any such protrusion should be slightly less than that of layer **400**, so that the proximal edge of layer **400** is still fastened to upper adhesive **304** of layer **300**.

[0285] A locating block **470** of foam or other light, rigid material (e.g., 0.125 inch thick urethane foam as shown in **FIG. 5A** and **FIG. 9**), corresponds in size to a mating "ridge-like" feature **520** on the bottom of monitor alarm **500** (as is shown in **FIG. 18C** and **FIG. 20**) In a preferred embodiment (as shown in **FIG. 22F**) the locating block tapers inward towards the proximal end of sensor **100** (as does the corresponding portion **520** of the monitor alarm **500**) to facilitate assembly in place, providing a guide for ease of initial placement and engagement. Thus, a caregiver can easily tell when the monitor alarm is fully in place. Alternatively, to the extent not fully joined with tab **170**, the elasticity of flap **460** will tend to urge the sensor **100** and monitor alarm **500** into more secure and precise connection. Locating block **470** is optionally disposed on the surface of flap **460**, where it is affixed by any suitable means such as adhesive, or by other means like solvent, ultrasonic or heat-bonding. The locating block can be provided with a notch **472**, which allows connector tab portion **170** to more freely protrude from the rest of the sensor, and thus facilitates insertion of the tab portion by a caregiver into receiving portion **600** of monitor **500**. Locating block **470** and mating feature **520** on the back of the monitor unit serve to keep the unit from sliding around on surface **474**, and particularly from sliding out of the open sides of the loop created by wrapping retainer flap **460**.

[0286] The above described locating features can also be replaced by other mating, interlocking, friction-increasing or relative movement-minimizing means. Such means can include a friction pad, or one or more short post-like or ridge-like, preferably rounded or tapered projections on the back surface of the monitor case. These projections can be designed to fit into suitable holes or openings through flap **460** and layer **452**. Such projections can be more easily engaged with the sensor if they have tapered or rounded profiles. They can then easily be aligned with the openings and pressed slightly through the sensor into front surface **474** of the diaper. Such appropriately slight indentations are typically unnoticeable to the diaper-wearer. This alternative offers the advantages of eliminating the cost of locating block **470** and also of reducing the total installed height of the retained monitor on the front of a diaper (which is slightly increased by the thickness of the block). In use by a caregiver, the full insertion of connector tab assembly **170** into monitor **500** automatically aligns the monitor properly to be gently pressed down into or onto the provided locating features, as flap **460** is stretched around the monitor and affixed to the front of the diaper/sensor.

[0287] The functions of the locating features previously described can instead be served solely by the mating of sensor connector tab portion **170** with corresponding connector receiving portion **600** of monitor **500**. In various embodiments, the proximal end of connector tab **170** can be designed to "bottom out" in the end of portion **600**, rather than to remain "free-floating" as flap **460** is stretched over monitor **500** and adhered in place, thus locating and, vis-a-vis the flap portion, retaining the monitor on the front of the diaper. Particularly if tab **170** is the only locating feature employed, the side walls of receiving portion **600** must have sufficiently small clearance (preferably about 0.025" or less) with the edges of connector tab **170**. Also, the tab must have enough rigidity to effectively stop the longitudinal movement of the monitor (when flap **460** is stretched over it)—as well as to locate and securely retain the monitor laterally. This is particularly practical if the nominal widths of the receiving portion **600** and the tab assembly **170** are made wide enough (such as about 0.75-inch, in the preferred embodiments shown). In such case where the connector tab also serves to solely locate and help retain the monitor unit, the receiving portion of the monitor case and/or the tab portion can preferably have tapering width, so that the sensor tab portion can be readily inserted into the monitor, yet guides itself into place with minimal side clearances as the tab is fully engaged. This arrangement, while eliminating the cost of the locating block, could tend to increase the scrubbing of the conductive elements **202** and **204** against contacts **620**, **622** and **624** in the monitor unit receiving portion, due to greater relative movement of the monitor case and sensor tab in the use environment. Some such movement is likely advantageous for at least some choices of conductive elements **202** and **204**. With metallic foil conductors, this would tend to promote increased self-cleaning of the contact surfaces. Such movement should be minimized, however, if more fragile printed-on conductive materials are used, to avoid possible loss of electrical contact. Printed conductive materials offer the potential advantage of allowing the contact spacing of layer **200** to easily be made wider only at the connector end, thereby eliminating the need for proximal-end narrowing **162** of double-sticky layer **150**. (As previously mentioned, the narrowed portion **162** is employed in the embodiment shown in **FIG. 3**, to prevent adhesive exposure on either side of conductors **202** and **204** on the top of tab **170**.)

[0288] As described, tab assembly **170** is designed to protrude either through or, in the preferred embodiment as

shown in **FIG. 5A**, around end **340** of layer **300**. This design serves to get conductive strips **202** and **204** from their flow-baffled, capillary-trap functional position (under layer **300** inside the diaper) through the substrate layer to the top side of the sensor portion outside the diaper for connection to the monitor. With this arrangement (as shown in **FIG. 5B** and **FIG. 20**), tab assembly **170** (with its conductive strips on top) can be simply inserted into monitor receiving portion **600**, where it is pressed upward by a preferably removable spring clip/plate **610** (or other pressure-producing means) against fixed, smooth connector contacts in the monitor case. This simplifies the liquid-sealed connection of these contacts to electronic circuit **900** inside the monitor, and it also facilitates the ruggedness and cleanability of the monitor unit. As will be apparent to those skilled in the art, this arrangement is preferable to having monitor unit contacts address conductors on the outside of a tab assembly (i.e., facing away from the monitor). As previously discussed, alternate embodiments of the sensor could attach the conductive strips to (or make them part of) the bottom of layer **300** or **250**, with either feed-through connections to the top surface (for contact pads on the top)—or a half-twist could be employed in layer **300** or other substrate, to get the front end of the strips on the top surface of a connector tab assembly. Any such alternatives would, however, likely increase cost and add other manufacturing and reliability problems. Another solution, with sensor configurations where the conductors exit the diaper on the back side of a contact tab assembly, is to have this assembly enter the monitor from the bottom, as will be further illustrated in the section, "Alternate Embodiments of Portion **450**," later in the specification.

[**0289**] Stiffening tab **166** is preferably laminated on the bottom of the sandwich of layers comprising connector tab **170**, so that the pressure-spring **610** or other means of the monitor connector slides smoothly and safely against this relatively hard, slippery surface, without risk of scratching or tearing the connector conductive strips (which may be very thin or simply printed-on). This feature also facilitates easy insertion of tab **170** into the monitor, as will be further described with reference to unit **500**. On the top side of assembly **170**, the contact strips are preferably separated from tab **166** by the top adhesive **154** and/or somewhat soft, compressible material of layer **150**, as is shown in **FIG. 20**. This allows the contact areas of conductive strips **202** and **204** to "pocket" themselves or "cold-flow" over the smooth (preferably rounded) bumps or heads of contacts **620**, **622** and **624** in the monitor unit, thereby increasing the reliability of the respective connections.

[**0290**] Alternate Embodiments of Portion **450**

[**0291**] **FIG. 22A** shows an alternate embodiment of the monitoring system, wherein the sensor is incorporated directly into a diaper, and where connecting, locating, and retaining means **450** are implemented very similarly to the add-on embodiment of **FIG. 2B**. In this case, however, flap portion **460** (and/or optionally other layers like **300** or components such as tab assembly **170**) emerge from within the top edge seam of the diaper layers (instead of being folded over from the inside surface) as shown at fold line **342**. Just as in **FIG. 2B**, portion **450** continues down the front of the diaper under the monitor unit **500**, in which area part of flap **460** is preferably adhered to diaper portion **474**, or affixed by other means. The flap is then wrapped or stretched out and over the front of the monitor to be preferably adhered (by means of suitable strippable adhesive, or affixed by other means) to the top front sensor portion (or to the diaper itself, in still other embodiments where a diaper surface may be suitably exposed).

[**0292**] In the above, or other variations of portion **450**, connector tab **170**, and also optional locating features (such as block **470**, not visible in **FIG. 22A** under the monitor and flap) position the monitor on the front surface of the diaper, while the somewhat elastic flap actually retains it. Elasticity in flap **460** is not absolutely necessary, as a shallow channel or flap-guiding ridges or other locating features can be added to the front or other surfaces of monitor **500** to prevent lateral slippage out the side of the flap. Elasticity, however, provides a smoother covering and more motion-tolerant, and hence secure, retention of the monitor. Moreover, additional projections disposed on the monitor could result in reduced cleanability and may be less comfortable to a wearer. An elastic flap also makes application of the monitor easier and more convenient for a caregiver. The flap is simply pulled over the monitor to quickly secure it to the diaper.

[**0293**] It is also possible, in various alternate embodiments of portion **450**, for tab **170** or components to exit from the front of a diaper, instead of from the top front diaper seam. Such arrangement may prove desirable for manufacturing, but would appear relatively complex and possibly also prone to leakage. The alternative disposition of a diaper-monitoring unit on the back side of a diaper, while possible, is undesirable for ease of monitor attachment, caregiver convenience, and diaper-wearer comfort and health reasons, including those related to preferred sleeping positions. Various authorities recommend that, for prevention of S.I.D.S. ("sudden infant death syndrome") infants not be encouraged to sleep in a "face-down" position.

[**0294**] **FIG. 22B**, **FIG. 22C** and **FIG. 22D** show various alternate embodiments of connecting, locating and retaining means **450** that can be employed where the sensor is pre-incorporated directly into a diaper, and where flap-like front portion **460** is shorter than in **FIG. 22A**, because it does not wrap entirely around monitor/alarm **500** on the front of the diaper. Instead, locating block **470**, which helps position the monitor, is separately disposed on the front of the diaper, and the flap wraps in a downward direction over the monitor unit, to retain it over the locating block. In order to avoid the tendency for tab **170** to be pulled out of the monitor by the action of stretching the retaining flap over the unit (as can occur with the arrangement shown in **FIG. 22B**, particularly if a locating block is not used), the sensor tab can preferably enter the monitor from the opposite, or bottom end, relative to the embodiments of **FIG. 22A** and **FIG. 22B**, as shown in **FIG. 22C**. Note, however, that in this case the proximal ends of conductive contacting elements **202** and **204** of tab **170** must be on the opposite (or bottom) side of the tab to mate with a different monitor configuration (shown in **FIG. 21A**) wherein connector opening **600** is at the bottom of the monitor unit. This requirement for the conductive contacts to be on the bottom of tab **170** may be satisfied by the use of certain alternate sensor embodiments as previously discussed with reference to eliminating layer **150**. Alternatively, it can be satisfied by a half-twist in the connector tab assembly or by other means, as will be apparent to those skilled in the art. An entirely different approach can employ an alternative "edge-clip" monitor

connector embodiment as shown in **FIG. 21B**, so that strips **202** and **204** can be on the top side of tab **170**, even with the connector assembly disposed on the bottom end of the monitor. Such monitor configuration would then be used in conjunction with the sensor shown in **FIG. 22D**, where the proximal end portion of tab **170** may preferably be bent to project relatively more sharply outward from portion **474**. As will be appreciated by those skilled in the art, the above the methods illustrated in **FIG. 22B**, **FIG. 22C** and **FIG. 22D**, for the implementation of portion **450**, can be applied in various combinations and also used with diaper add-on embodiments as well as incorporated ones.

[**0295**] **FIG. 22E** shows how, in embodiments where the sensor is built-in to a diaper, flap **460** and any monitor-locating features (other than tab **170**) can be entirely separate from the rest of the added sensor components and can be either affixed to, or integrated with the front of the diaper as shown at **474**. Such an alternate embodiment may well be most advantageous for manufacturing when the sensor is built-in to diapers, because it eliminates the complexity of getting tab **170** from the bottom through or between other layers of the sensor. Moreover, this method eliminates the need to join sensor-substrate layer **300** to flap **460** in the manufacturing process, thus facilitating the use of different materials (such as "double-sticky" tape for **300** but not **460**) in separate continuous-strip processes, and/or simplifying the disposition of adhesives on only the appropriate portions of a single component. This approach (**FIG. 22E**) also avoids extending tab **170** as shown in **FIG. 22C** and **FIG. 22D**.

[**0296**] The embodiment shown in **FIG. 22E** also retains the most preferred "upward-wrapping" direction of flap **460** over the monitor unit, as shown in **FIG. 2** and **FIG. 22A**, which arrangement offers the best caregiver visibility when attaching the monitor to a diaper/sensor, as well as making the removal of flap **460** (at the time of diaper changing) more convenient. As shown in **FIG. 22E**, only tab **170**, as well as optionally a short extension of layer **300** and cover **400** (to provide a smoothly finished fold-line edge), need continue forward from the "in-diaper" sensing portion, to emerge from the top edge of the diaper (where they most easily exit the laminated diaper layers) to reach the front monitor location without creating a possible leakage path. Retaining flap **460** and optional locating block **470** can likely be more easily fabricated and affixed to (or integrated with) the front of the diaper if they are not part of the in-diaper portion of the sensor assembly. Flap **460** can thus be wrapped (preferably stretched) around unit **500**, to then be adhered to the exposed adhesive on the proximal extension of layer **300**. (or otherwise attached).

[**0297**] In any of the previously described embodiments of portion **450**, suitable releasable attaching means (such as adhesive) can alternatively be disposed on the proximal portion of flap **460**, near end **462**, for the purpose of securing the flap after it is stretched over the monitor. In those cases where the flap wraps downward over the front of the monitor, adhesive can be used at the bottom of portion **474**, as indicated on both flap **460** and the diaper in **FIG. 22B**, **FIG. 22C** and **FIG. 22D**. In any of these cases, a variation of strippable, top cover sheet **455** (as shown in **FIG. 2A** and **FIG. 17**) can protect the exposed adhesive prior to the attachment of monitor **500**.

[**0298**] Monitor/Alarm Unit **500**

[**0299**] As illustrated in **FIG. 18A**, **FIG. 18B**, **FIG. 18C** and **FIG. 18D**, monitor/alarm **500** includes a protective case **510** having an upper portion **512** and a lower portion **514**. Lower portion **514** has raised ridge or collar portion **520** that serves as a receptacle for locating block **470**. As was previously described with respect to sensor **100**, various other forms of mating, interlocking or friction-producing features or materials could be employed in the sensor and/or monitor unit to accomplish the purpose of positioning and laterally retaining the monitor unit with respect to the surface of the disposable sensor and diaper. Lower portion **514** has a preferably recessed receiving portion **600**. Together with spring clip/plate **610** and contact pins **620**, **622** and **624**, portion **600** helps provides monitor **500** with reliable electrical connection to the sensor, and also contributes to the proper location and secure retention of the monitor. Upper portion **512** provides a top, relatively smooth surface for the location of a faceplate overlay **517**, which optionally includes design graphics **518** such as a "balloon" or other design. Overlay **517** comprises a functionally integral part of a mode change assembly **700**, a visible signal transmission assembly **750**, and an audible signal assembly **800**. Upper and lower portions **512** and **514** each also provide their respective halves of a top **530**, a bottom **532**, a left side **534** and a right side **536** of case **510**.

[**0300**] Disposed within case **510** are a circuit board assembly **910** with a lithium coin-cell type battery (BTY), an audible transducer BPR (elsewhere referred to as **810**), a visible display LED, a mode-change switch S1 and sensor-tab contacts **620**, **622** and **624**, altogether comprising the monitor/alarm portion of electronic circuit **900** as depicted in the block schematic diagram of **FIG. 23**. The upper and lower portions of case **510** are preferably joined to form a permanently-waterproof sealed case, which is designed to require no opening for repair or battery replacement during its intended useful life.

[**0301**] Sensor-Connector Receiving Portion **600**

[**0302**] Receiving portion **600**, as illustrated in **FIG. 18B**, **FIG. 20** and **FIG. 21A**, receives tab **170**, when inserted between a first **612**, a second **614** and a third **616** set of prongs of spring clip/plate **610**, and contact pins **620**, **622** and **624**, respectively. Contact pin **624** receives narrower conductive member **204**. Contact pins **620** and **622** both receive wider conductive member **202**, thereby completing the monitor circuit between pins **620** and **622**. This action switches-on monitor **500** automatically, upon insertion of tab **170** (as will be further discussed with respect to monitor circuit **900**). In a preferred embodiment (as shown in **FIG. 20**), there is provided a greater protrusion of contact pins **620** and **624**, relative to center pin **622**, from the upper surface of portion **600**. The pressure of spring prong **614**, in directly forcing the center of tab **170** against pin **622**, acts in conjunction with the difference in protrusion of the contact pins, to gradually cause flexion of the resilient tab/conductive strip assembly as it is inserted. This arrangement thereby ensures the constant pressure of conductive strips **202** and **204**, on tab **170**, against each of the contact pins. This flexion of tab **170** also increase the frictional force by which the tab is retained in recess **600**. A smooth rounded tip **619** of spring prong **614** preferably protrudes slightly (at an angle away from portion **600**) beyond case top surface **530**.

Tab **170** is initially guided into place by tip **619**, the edges **612** and **616** of plate **610**, and also is centered and aligned by the sides of recess **600** in the monitor case.

[**0303**] In other words, to create a reliable connection for all monitor contacts, the preferably narrow cantilever spring prong **614** presses the axial mid-line of the tab directly against the center of three spaced contacts (or the top of the recess in the monitor case if only two sensing contacts are used). Because two outboard contact "bumps"**620** and **624** protrude relatively farther than does center contact bump **622** (or the monitor-case surface if only two contacts are used) the spring clip also causes the resilient contact tab itself to flex and act as a flat-spring element. This second spring force acts to securely press the conductive elements of the tab assembly against the outer contacts. (The relative protrusion of contacts could alternatively be reversed or mirrored, i.e., center-high and sides-low to achieve substantially the same purpose.) Because any subsequent relative motion of the connector tab and monitor simply "scrubs" the conductive strips over the smooth surface of the contact bumps while the contacting surfaces are under continuous pressure, self-cleaning and reliable electrical connection is assured.

[**0304**] With the preferred three-contact arrangement as described above, the monitor unit's operation is automatically turned-on (from a zero power-consumption state) at the same time and by the same means that connection is made between a disposable sensor and the reusable monitor unit—by simply inserting tab **170** into slot **600**.

[**0305**] The retaining and contacting forces described above can optionally be made "field-adjustable" by the variable tightening of an attachment means **618** (preferably a screw), which can be employed to hold spring clip/plate **610** in place on lower portion **514** as shown in **FIG. 18C**. Whether adjustable or not, the use of a screw or other removable attachment of spring clip/plate **610** readily allows its replacement, should it become weakened or damaged. It also facilitates the occasional cleaning of recess **600** and its connector contacts, as may become necessary in the use environment, by making this otherwise enclosed area of the monitor readily accessible. Alternatively, spring clip/plate **610** can be slid into molded-in "dovetail" or other type slots in the monitor unit case and further located and retained by friction, or by a molded tab/detent or other means. Spring clip/plate **610** is preferably made of thin, corrosion-resistant sheet material (e.g. 0.015 inch thick, stainless steel or a likely thicker, suitable engineering polymer or composite).

[**0306**] Spring clip/plate **610** covers and thereby physically protects the contact area of the monitor, and also ensures that the connector tab of the sensor remains aligned with respect to the contact pins. The narrow (e.g., 0.125-inch wide), cantilever spring prong **614** preferably has no electrical function, but initially guides the tab as it is inserted into the slot between plate **610** and recess **600**.

[**0307**] Tab **170** and mating slot recess **610**/**600** in the monitor unit are sized such that, when inserted, the end of the tab reaches lengthwise well past the contact bumps, but preferably does not reach the end of the slot (thus ensuring that the monitor unit will be positioned by locating block **470**, or other locating feature, regardless of the exact end position of the tab). This arrangement (as previously mentioned with respect to sensor **100**) minimizes the relative scrubbing of the sensor tab conductive elements against the connector pins which could otherwise compromise the electrical reliability of the connector during use. The width of slot **600** is only slightly wider (preferably about 0.050 inch) than connector tab **170**, to ensure continuous alignment of the conductive strips and contact bumps, while still allowing easy insertion. The three entrance edges of slot recess **600** in the case are smoothly radiused, and the contact bumps are rounded and slightly countersunk into their respective locations in the monitor unit case. These features allow the connector tab a smooth ramping entry into the slot (without encountering edges of the contact bumps) as it is flexed by the spring and bumps. To make the initial engagement of tab **170** into slot **600** as easy as possible for a caregiver (and as previously mentioned), tip **619** protrudes a short distance beyond top edge **530** of the case, so as to automatically "catch" or capture the end of the tab into slot **610**/**600** as the monitor is applied to a sensor. Top edge **530** of the monitor case may preferably have contrasting marking or may be slightly recessed or ridged (as shown at **516** in **FIG. 18A** and **FIG. 18B**), to highlight (to a caregiver, viewing from above) exactly where tab **170** should be inserted. As previously described with reference to sensor **100**, the material properties and order of the layers comprising tab **170** enhance both the ease of tab insertion/removal and also the contact-retention and reliability achieved by the connector means of the system.

[**0308**] The sensor-connection and monitor-retention means as described above employs fully liquid-sealed electrical connection directly through monitor case portion **514** at the bottom of recess **600** (and therethrough to an electronic circuit board assembly **910** inside), by contact bumps **620**, **622** and **624**. These bumps, in a preferred embodiment, are corrosion-resistant metal pins (e.g., stainless steel or gold or nickel plated brass) with smoothly rounded heads.

[**0309**] An alternative embodiment of receiving portion **600**, shown in **FIG. 26A**, employs a preferably molded channel **600** in back case portion **514**, the channel having three smooth-headed contact pins or bumps **620**, **622** and **624**, disposed on its surface, with a pair of smooth, preferably tapered or ramping protrusions **636** and **638**, disposed on the opposing surface of a pressure-plate **605**, which is preferably removable, but rigidly located in relation to channel **600**. Plate **605** can be molded as a single piece of plastic and fixed in place by having beveled side edges that slide into dovetail slots in case portion **514** (such as shown at **617**), or be held to case portion **514** by a screw, or by other means. Protrusions **636** and **638** are each disposed approximately between middle **622** and outer **620** and **624** contact pins, respectively, to form tab assembly **170** into a waveform, thus insuring contact with each of the contact pins and retention of the tab within the recess **600**/**605**. Pressure plate **605** (with its protrusions **636** and **638** combined with the resilience of tab assembly **170**) thus effectively replaces spring clip/plate **610** (of the previously described embodiment) and can preferably have a molded lead-in lip **606** to capture tab **170**. Contacts **620**, **622** and **624** may protrude to the same or different amounts and may be either symetrically or asymetrically placed. Other embodiments include employing different contact members on alternate sides of recess **600** (such as having the equivalents of contacts **620**, **622** and **624**, but rather with them disposed alternately to address both top and bottom surfaces of a connector tab, such that a circuit therebetween is bridged upon insertion of

the assembly for on/off operation without employing wider and narrower contact members, thereby reducing the width of the connector assembly), the attendant modifications of the sensor connection being apparent to those skilled in the art, in light of this specification.

[**0310**] The flexible-tab connector means of the elimination-absorber monitoring system is intended to provide high reliability in this demanding use environment with maximum caregiver convenience—at minimum cost. It may well find other uses, where low cost, high reliability, ruggedness, flexibility and convenience are paramount. For example, many products, systems and devices have need for making motion-tolerant electrical connections between a flexible-circuit element and some other element. The approach employed in monitor **500** eliminates much of the cost and other drawbacks of any add-on connector device which would otherwise need to be attached to a termination-end of a flex-circuit such as tab **170**. A small, inexpensive plastic stiffener tab can be bonded to the back of a flex-circuit (e.g., 0.010-inch thick polyester in the case of tab stiffener **166** in sensor **100**) to provide the desired contact pressure when used with a suitable spring clip or pressure-producing means. (Alternatively, with appropriate choices of material and dimensions, the flex-circuit substrate itself may be resilient enough for this purpose.) The conductive strips of the flex-circuit can be exposed a short distance back from end of the tab by selectively eliminating the top insulating lamination or coating of the flex-circuit in this region, where the conductive strips may optionally be plated or coated with a contact and reliability-enhancing material (such as gold). The whole connector system can easily be made water-resistant and is very simple to clean and maintain. It also has the major advantage of providing reliable, positive, automatic alignment—and extreme ease of repeated connection and disconnection.

[**0311**] The concept of this flex-circuit tab connector can easily be extended to multiple-circuit connections (i.e., more than two or three conductive circuits as used in diaper-monitor **500**) by means of simply alternating the relative protrusion-height of the spaced contact bumps in the slot of the "female" part of the connector (such as slot **600** in case portion **532** of monitor **500**). As in the two or three-circuit situations, the flexible, resilient, "male" tab which carries the flex-circuit conductors is then "rippled" slightly as it is inserted into the slot, where it assumes a slight "wavy" cross-section where it passes over, and springs against the multiplicity of contact bumps, as further explained below.

[**0312**] Further Discussion Of Alternate Connector Embodiments

[**0313**] As may be inferred from **FIG. 26B**, regardless of the number of conductors provided, pressure spring **610** of the connector employed in an elimination-absorber monitoring system or in other applications can alternatively be replaced entirely by a series of fixed (preferably molded-in) ramping protrusions or tapered-height pressure bumps (e.g., **636** and **638** shown) rising from the inside of a slot surface opposite to the surface with contact bumps (such as **630**, **632** and **634** shown). One embodiment of such bumps can be visualized as lengthwise-bisected ice-cream cones lying on their sliced sides. These bumps are located such that each pressure-bump is spaced midway between an opposing pair of contact bumps (i.e., equally-spaced along their centerline) to gradually force the resilient connector tab into a lengthwise slightly wavy shape as it is inserted into the slot. These pressure bumps are tapered or ramped from zero-height (at the entry of the slot) to a their maximum height at the centerline of the contact bumps.

[**0314**] As shown in **FIG. 26B**, the contact bumps may themselves also be tapered in height, to minimize insertion force and to aid in deforming the tab. In this configuration (without a pressure spring), all the contact-maintaining force is supplied by the inherent resilience of the male connector tab itself. The surface of either or both the connector bumps and the pressure bumps may preferably be extended into a smooth angled lip **606** (on any of the opening edges of slot **600**/**605**) to make capture and insertion of the male tab easier. With pressure bumps rising out of a (preferably molded) plate (instead of formed pressure spring and integral plate), the contact bumps need be the only conductive (and hence, likely the only metallic) portion of the entire female part of the connector. As previously mentioned, pressure plate **605** which covers recess **600** in the female portion of the connector can easily be made to slide into "dove-tail" slots, or be retained by use of one or more fasteners, detents or by any other appropriate means.

[**0315**] A "double sided" form of the connector can be made by changing the "pressure bumps" into conductive "contact bumps" and simply staggering the conductive strips of the flex-circuit tab (i.e., shift the pattern of strips on top and bottom of tab so they are perfectly "mis-registered" top-to-bottom). Either or both sets of connector bumps can be the ends of flex-circuits (or two halves of the same two-layer flex-circuit) leading out of the "female half of the connector. This makes it particularly easy to create "in-line" connections for various other applications, or to bring the connections into another circuit (board) assembly. It is also possible to employ an alternative method, where the conductive strips enter into the female connector to slide and ripple "sideways" over smooth contact bumps, but this has the disadvantage, for some applications, that momentary "wrong" connections can occur as the conductive strips approach their final (intended) registration with the contact bumps. It is also possible to create a "zero-insertion force" connector with either of the orientations by using a cam or other simple mechanical device to separate the contact bumps and pressure bumps (or contacts) for insertion of the connector tab, after which the process is reversed to "clamp" down on and deform the tab into a "wavy shape" as with the ramp-in method above.

[**0316**] The Control and Indication Interface

[**0317**] Monitor unit **500** utilizes a novel, simple control and indication interface with highly intuitive operating procedures. Diaper-monitoring units must be operable by very young baby-sitters, elderly or handicapped caregivers, and in general, any person that may at the time be acting under considerable stress or distraction in virtually any location or situation. For this reason, the present invention provides that the only required caregiver actions (for control purposes during operation of the elimination monitor) consist of "one-handedly" pressing a single switch (as described below with reference to a mode-change assembly **700**) to both test and verify proper operation, and also to change alternately between the audible and visual alarm modes. Each pressing of the switch causes the unit to alternately emit either a

momentary audible or visual alarm indication, but only if the unit is properly connected to the sensor and the system is ready to monitor a diaper. Each indication (either audible or visual) also clearly confirms the current mode (audible or visual) the monitor is set to operate in. The monitor unit operates continuously, in whichever mode it is set to, as long as a sensor is connected to it, thereby eliminating the possibility of it being accidentally left off or turned off. (The unit consumes no power when a sensor is not connected and conversely, connecting a sensor automatically switches the unit on.) As will be apparent to those skilled in the art, an alternate embodiment of monitor/alarm **500** could provide for both audible and visual alarms to be used together, with the likely consequence of increased power consumption.

[**0318**] The Mode-Change Assembly

[**0319**] Mode-change assembly **700**, as shown in **FIG. 18A** and **FIG. 21A**, consists of a single waterproof, momentary-type flat-panel switch (S1 shown in the schematic diagram of **FIG. 23**), covered by a sealed faceplate overlay **517** on front case portion **512** of monitor unit **500** and is located near a lower corner of the faceplate to make it relatively less accessible to the diaper wearer than to a caregiver. The switch can be of any suitable type (such as the typical miniature dome-type keyboard switch which is used in the preferred embodiment) mounted on the top of the unit's circuit board, at such relative height and position that the end of its moveable push-button or other such activating button protrudes through a slightly larger hole **705** in the monitor unit front case portion **512**. The switch button is nominally flush with the case top surface where it touches the bottom surface of flexible, waterproof, graphic overlay sheet **517**, which seals hole **705**. (In an alternate embodiment, an activating button protrusion can be molded into the top case surface along with a surrounding annular flexible feature for the purpose of reaching down to a relatively flat type switch below, either with or without the use of a separate flexible overlay.) Overlay **517** is somewhat smaller than the face surface of the monitor and is permanently (and preferably adhesively) affixed to a shallow locating recess in the front case portion **512** during its manufacture. This overlay is preferably a thin (typically 0.001-0.010 inch thick; 0.003 inch thick in the preferred embodiment) flexible rubber or plastic sheet such as vinyl, polyester, or polycarbonate (polyester is used in the preferred embodiment). The properties of the overlay must be selected to provide rugged protection of the switch in the use environment while still allowing the firm, targeted pressure of a caregiver's finger to conveniently and reliably actuate the switch. The pressure required can be preferably tailored by selection of the switch, adjustment of the case through-hole clearance or the end-gap (or preload force on the activating button) between the switch and overlay to make it relatively more difficult for a baby to actuate it. A graphic design on the overlay location (such as a "dot"**702**, shown in **FIG. 18A** on overlay **517**, directly over hole **705**) can also provide indication of the switch's location—which would otherwise not be apparent—and can thus be made as obvious or not, as desired. The preferred position of the mode-change switch, when monitor **500** is installed on a diaper for use, is relatively inaccessible to the wearer, and can be made more so.

[**0320**] The top edge of hole **705** in the monitor case should be chamfered or rounded, so that repeated switch activation will not excessively stress overlay **517**. The overlay is as thin as possible, consistent with the considerations discussed above, both to prevent flexure-induced fatigue failure, and also to avoid unnecessary attenuation of the audible alarm means of monitor **500** (which communicates via acoustic vibration through the same waterproof overlay). Mode-change switch S1 is connected, via the circuit board on which it is mounted, to the monitor units electronic circuitry wherein it actuates a suitable logic input to effect the changes between the monitor unit's audible and its visual alarm modes.

[**0321**] The Visible Signal Transmission Assembly

[**0322**] A visible signal transmission assembly **750**, as shown in **FIG. 18A**, **FIG. 21A**, and **FIG. 27**, is designed to work in conjunction with flap **460** of sensor **100** in order to achieve sufficiently high brightness and useful viewing angle, with sufficiently low power consumption in the use environment. A high-efficiency, high-intensity LED (light-emitting diode) as shown in the schematic diagram of **FIG. 23** is selected to be a "super high brightness" type, typically having a focusing lens with a relatively narrow "viewing" or beam "exit-angle" (such as a Mouser Electronics type 351-5200, a T-1¾ size red device having specified luminous intensity of 1,200-2,000 mcd at 10 mA, and a 20-degree exit-angle). Such devices having impressively high brightness, but narrow exit-angle output are readily available, but in typical applications they are very hard to see "off-axis", particularly in bright (or direct sunlight, or outdoor) ambient light. The LED is mounted inside monitor unit **500** at such position and relative height that it can project virtually all its light output through a hole **755** in monitor case front portion **512** and then through an aligned, relatively transparent window in any graphic design or other opacity of the unit's thin, adhesively-sealed permanent faceplate overlay **517** (as shown in **FIG. 27**). The through-hole in the case is provided with a chamfered edge **760** and is suitably dimensioned so that the emerging light cone or exit angle is not obstructed, but the unit's interior is otherwise shielded from view. The emerging focused light cone passes through the transparent window and then impinges on the bottom surface of the preferably translucent portion of sensor flap **460** which is designed to wrap over and to secure the monitor unit in place, while also acting as a light diffusing, rear-projection screen for the LED light cone. The described arrangement ensures that virtually all the LED chip's light output is efficiently transferred to, and suitably diffused over, the desired indicator area of the viewable outer flap surface of the sensor, and also results in practically **180** degrees of viewing angle when the monitor is in use. This arrangement also eliminates the need for any openings in, or accurate alignment of, the covering flap with the monitor unit to avoid obstructing the visual display. In an alternate embodiment, the monitor unit faceplate overlay may have light diffusing properties as well, thereby providing (when shining through the flap) additional angular diffusion or scattering of light, at the expense of some brightness. Faceplate overlay **517** may preferably have graphics integrated with the LED window such as balloon **518** or other attractive icon or design which can be seen through the sensor flap when the monitor unit is attached to diaper. Even if the sensor flap is a strong diffuser of light, the front panel overlay of the monitor unit is still clearly visible through it because the flap is stretched tightly over the unit, holding it in place. In use, the wearer's outer clothing can also act as a rear-projection screen for the LED, through which, rather surprisingly, the

visual indications can be easily seen, even in relatively bright light (except in cases of thick, multi-layered, dense or dark-colored clothing materials).

[0323] The effective and convenient use of a diaper-monitoring system through clothing worn over the diaper is a significant advantage of the present invention over prior devices—and particularly over various non-electronic approaches that have all required that such clothing be repeatedly removed, and the outside of the diaper visually inspected—to determine when the sensor had been activated. The mode change assembly **700** of monitor unit **500** (as previously described) is easily operable, even "one-handed", through clothing. The unit's audible-mode indications can be easily heard from across a room, or even from a distant location via an ordinary remote baby monitor and, as explained above, both the audible and the silent visual-mode indications are effective through outer clothing.

[0324] The Audible Signal Transmission Assembly

[0325] An audible signal assembly **800** shown in **FIG. 18A** and **FIG. 28**, utilizes a specialized portion of sealed faceplate overlay **517** of monitor unit **500** as a passive resonator membrane so that alarm signals (and particularly desirably low frequency ones) can be efficiently transmitted from a low-power, electro-acoustic transducer **810** ("BTY" in the schematic diagrams) to caregivers without compromising the waterproof seal of the unit's case (see **FIG. 28**). In at least one location, this overlay membrane is uniquely supported (but not normally touched) by features in the unit's case (disposed under the membrane) so that it is protected from damage due to excessive flexure, but its damping is not increased. Moreover, effective transmission of audible alerts through the sealed monitor case is accomplished at minimum cost and visual impact because no additional or noticeable, sealed, acoustically transmissive component is needed, leaving a smooth and easily cleanable surface.

[0326] Prior electronic devices, and products of many kinds, have used audible transducers in conjunction with one or more openings in or holes through the respective units' cases to allow sound to emanate—and have thus not been capable of waterproof integrity. Other prior devices have commonly employed a sealing membrane disposed behind a rigid or semi-rigid protective grille or panel, presenting an outer surface prone to trapping liquid or foreign matter in small openings that are particularly difficult if not impossible to clean. Still other prior devices (particularly waterproof "alarm watches") have relied on conduction of sound through the unit case itself or through a relatively rigid component, such as a watch-face crystal, to address this problem. Because relatively rigid materials do not effectively conduct and then transmit to the air relatively low frequencies of acoustic or mechanical vibrations, this approach limits the usable sound frequencies to rather high pitches which are not desirable in many applications. For example, many people suffer from high frequency hearing loss that prevents them from effectively using such devices. Moreover, higher frequency audible alarm indications can be harder to notice over environmental background noise than are lower frequency sounds. If they are made loud enough—they can often become annoying in other circumstances. For years, engineers have employed the common prior-art strategy of simply (and often greatly) increasing the signal output power that drives an audible transducer, to overcome the rather severe attenuation of sealed electronic-device enclosures. Unfortunately, this practice has generally significantly limited battery life, by worsening what is inherently one of the most power-consumptive operating aspects of many devices.

[0327] In the present invention, a suitable transducer is selected from any of several types including (but not limited to) electromagnetic buzzers, piezoelectric beepers and loudspeakers. In the preferred embodiment, the transducer is selected to be a relatively small, very low power, electro-acoustic beeper with a desirably low resonant frequency of 2,048 Hz (such as an International Components type BRT-101). It is capable of producing sound pressure levels of about 80 dB(A) at 10 cm. range (in free air), while consuming less than 30 mW (rms) of power. This device itself incorporates a Helmholtz-type resonant enclosure with a small hole **820** at its top (approximately 0.125 inch in diameter). In typical electronic products, this hole is positioned behind, and in alignment with, a similar sized through-hole in the product's case. In the present invention, this transducer is driven by the monitor unit circuit which, at suitable times, produces "square-wave" signals having approximately 2.5-3.0 volt amplitude and having frequency approximately equal to the resonant frequency of the transducer (when sealed in the monitor unit's case).

[0328] In order to achieve the highest possible transfer-efficiency of acoustic energy from transducer device **810**, through the sealed faceplate overlay membrane **517** of monitor unit **500**, it is desirable to maximize a relatively undamped, free-flexing "drum head" area of the membrane, relative to its thickness. This is done by providing a relatively large but very shallow recess **830** in the monitor unit's case preferably directly behind the acoustic "passive radiator" or drum head portion of the faceplate overlay (approximately 0.375-inch in diameter and 0.015 deep in the preferred embodiment). The bottom of this recess is preferably molded directly into the upper case section **512** and is perforated with one or more (but preferably a plurality of) openings **540** for relatively unobstructed acoustic transmission, but is still relatively rigid and strong in order to limit the maximum deflection of the membrane to just slightly more than its greatest amplitude when it is vibrated by acoustic compression waves from transducer device **810** inside the unit. This arrangement serves to prevent the overlay membrane from being pushed into the case during handling (or by "probing" on the part of a child or infant) and thus acts to prevent its damage, by limiting the deflection of the overlay material to well within its elastic range. Because the overlay seamlessly covers the recess, the location of the recess can be made visually unnoticeable, further reducing the likelihood of damage to the membrane.

[0329] In variations of the preferred embodiment shown in **FIG. 28** with overlay **517** having uniform overlay cross-section, the overlay may instead be laminated from two or more layers of the same or different thicknesses so that an acoustically-active portion lying above the shallow recess (as described above) can be thinner than other areas of the overlay by eliminating adjacent portion(s) of one or more of the other layer(s), thus providing an optimal balance of durability and sound transmission. In one such case, a thin, acoustically-active outermost layer can be disposed above the eliminated adjacent portion(s) of the inner layer(s) such

that the eliminated portions) taken together with the supporting panel or case itself serve the function of shallow recess **830**. Similarly, as described previously, part or parts of the overlay can be relatively transparent for visual display purposes, or have other desirable properties where switches or other devices are located under the overlay.

[**0330**] The enclosure of a transducer device into a relatively small sealed volume, as in the present invention, inherently raises the resonant frequency of the transducer. This fact necessitates that the driving signal have appropriately adjusted frequency for maximum acoustic volume. A transducer's own enclosure (if used) is generally tuned for maximum transfer of acoustic energy to the relatively "infinite" volume of a room or outdoors. In the case of the present invention, however, the case design of the monitor may be modified to provide additionally optimized acoustic impedance matching (i.e., coupling) to the overlay membrane. The transducer device or its own resonant enclosure may also be suitably modified to achieve the same purposes as will be readily apparent to those skilled in the art.

[**0331**] Moreover, the monitor case can be partially evacuated of air, and/or filled with a suitable gas to reduce the cavity resonant frequency or the acoustic damping produced by the small internal volume of the case to enhance the efficiency of acoustic transfer. The partial evacuation or filling of the monitor unit case with relatively inert gas can also be used either with or without solid or jell-type potting or conformal coating to prevent deterioration of the monitor's internal components due to corrosion or other chemical effects.

[**0332**] Other Applications of the Audible **800** and Visible **750** Signal Transmission Means

[**0333**] It will be apparent to those skilled in the relevant arts that the basic elements of both this invention's audible and visible signal assemblies are also applicable to other diverse applications using non-audible or non-visible wavelengths (such as ultrasonic/infrasonic or infrared/ultraviolet waves, respectively). It will also be apparent that these methods are symmetrically applicable to situations wherein the respective transducer is either alternatively or additionally a detector of the signals, with a given "acceptance-angle" instead of purely a source with a given "exit-angle". Most, if not all the respective advantages cited for these methods clearly apply to such other applications.

[**0334**] The Electronic Methods Employed by Monitor **500**

[**0335**] As illustrated in **FIG. 23**, the monitor/alarm circuitry **900** preferably employs narrow, relatively fast transition-time pulses generated by an oscillator circuit for conductivity measurement, instead of either the DC or sinusoidal AC methods employed by previous systems. The pulses can have a duration of about 0.1 second and a repetition rate of about one pulse every 3 seconds. This rate is chosen as a compromise between the "see-it-at-one-glance" user preference (as determined by subjective testing with selected caregivers who typically did not like to wait more than 3-seconds while watching for an alarm flash to occur) and excessive power consumption caused by more frequent alarm indications (assuming that the same pulse widths and repetition rates are used for both sensing and alarm indication). Alternatively, as discussed below, the pulses can preferably be doubled, i.e., each burst comprising two pulses, each having a duration of about 0.1 second, separated by about 0.1 second off-time and such bursts occurring about every 3 seconds. This relatively low duty-cycle offers the advantage of allowing the ions in the matter being monitored to recover their normal, random distribution between pulses, so that the average measured conductivity does not radically change over time. As may be appreciated by those skilled in the electronics art, different embodiments of monitor circuit **900** could instead apply pulses to the sensor that alternate in polarity, or the pulses could be applied through (i.e., in series with) a capacitor to achieve a true zero time-average of applied voltage. Such alternative methods are, however, more component-intensive and complicate, if not preclude, the integral automatic power-switching via connection of sensor **100**. The high-frequency harmonic-content of the pulse waveform, due to the fast transition-time of the pulses, also exploits a phenomenon commonly referred to as "skin conductivity" of solids, whereby relatively higher frequency electrical signals often travel much more easily over the surface of solids and semi-solids than do lower-frequency or DC signals. This phenomena is particularly useful for reliable feces-sensing. Moreover, digital switching in the oscillator circuit that generates the pulses is much more energy efficient than can be achieved with AC sinusoidal oscillators, resulting in longer battery life for monitor/alarm **500**.

[**0336**] The same pulse widths that are generated for sensing are, in one preferred embodiment (as shown in the schematic diagram **FIG. 23**), also used for the beeps or flashes produced by the monitor unit to indicate the "diaper needs changing" state, permitting the combination of electronic functions and facilitating further energy savings. In various microcontroller-based embodiments (as shown in **FIG. 24A**, **FIG. 24B**, **FIG. 24C** and **FIG. 24D**), it is alternatively feasible to have different pulse widths and/or repetition rates for sensing as are used for alarm indications, without increasing the component count. Such an embodiment can use very narrow pulses for sensing (typically a few milliseconds wide) to minimize both power consumption and ionic dissociation. As mentioned previously, in order to optimize the observability of the alarm signals (particularly in the face of competing background noise or ambient light) it is preferred to use double (or multiple) pulses rather than single pulses for alarm indication. Alternatively, other types of audible and visual signals can be employed, such as musical tunes, simulated animal noises or other sounds, as well as voice or displayed messages. Such alternatives, however, are likely to result in more complex circuitry, increased power consumption and potentially greater size and weight.

[**0337**] Preferred Discrete-Logic Embodiment of Electronic Circuit **900**

[**0338**] Referring to the electronic circuit diagram (**FIG. 23**) of a preferred discrete-logic implementation of monitor unit **500** and connected disposable sensor **100**, a combination of CMOS logic gates (such as the 4000-series or 74HC-series devices) and other standard components provides all the necessary electronic functions. Several functional blocks which can be implemented using common methods are shown simplified for clarity. For example, a low-frequency CMOS "double-pulse oscillator" block (U7) generates a continuous waveform, as shown, whenever the unit is connected to a disposable sensor, thereby providing

the primary timebase and conductivity-measurement pulses for the monitor circuit as well as pulses for audible or visual alarm activation. As will be readily apparent to those skilled in the electronics art, this type of oscillator block can be implemented using a number of common techniques, including simple R/C relaxation oscillator configurations with suitable standard gates. Although various types of crystal or ceramic resonator oscillators could alternatively be used, timing accuracy greater than about +−10% is not necessary in this application and the simple R/C oscillator approach is generally the most economical. Typical CMOS gates with negligible output loading provide output swings essentially from 0-V to +V as well as having relatively fast switching transition times in the microsecond range or faster, which are desirable both for power minimization and for effective measurement of feces-related conductivity.

[**0339**] The double pulses produced by U**7** are applied through sensing reference resistor R**2** (preferably about 2 megOhm in a preferred embodiment) to sensor-connector SC**1** (same as contact pin **624**) and thereby to conductive strip **204** of disposable sensor **100**. As shown in **FIG. 20**, this conductive strip is, in the preferred embodiment, the narrower of the two strips **202** and **204** running along sensor connector tab **170** and leading to "capillary trap" measurement gap portion **160** of sensor **100** inside a diaper. Upon insertion of tab **170** of the sensor into receiving portion **600** of monitor unit **500**, both these strips are connected to the monitor circuit **900** as shown by the dashed lines in **FIG. 23**, with wider conductive strip **202** bridging sensor-connector contacts SC**2** and SC**3** so as to connect the anode (in this embodiment) of the monitor's internal lithium "coin-cell" battery BTY to the 3-Volt "+V" supply bus of the circuit, and thus serving as the circuit's only power on/off switch. This advantageous arrangement, by which one "end" of the conductivity measuring circuit is common to the power supply bus of entire circuit **900**, allows just one "extra" (third) contact SC**3** (which can be either **620** or **622**) in the monitor connector to provide (in conjunction with wider conductive strip **202**) fully automatic master on/off control of the system. It is important that the voltage applied to SC**1** and thereby to conductive strip **204** of the sensor is essentially equal to the constant +V (battery voltage) applied to SC**2** and SC**3** (and thus conductive strip **202**) during all but the relatively brief (approximately 0.1-second) low-going pulses from U**7** (occurring about every 3 seconds). As previously described, this low duty-cycle of applied voltage across the sensor minimizes ionic dissociation of the material to be sensed as well as the power consumption of the circuit due to current conduction through the sensor. As also previously described, the relatively fast transition-times of the pulses exploit the advantageous high-frequency skin-conductivity effect.

[**0340**] The low-going pulses from U**7** are inverted by U**8** and then applied to one input of AND gate U**9**. The other (preferably Schmitt trigger type) input of U**9** is connected through a protective current-limiting resistor R**3** (about 100 k-Ohms) to the sensor via sensor connector SC**1**, which is, in a preferred embodiment, the same as contact pin **624** of monitor **500**. Resistor R**3** and transient absorption devices Z**1** and Z**2** are used to protect the monitor circuitry from possible electrostatic-discharge (ESD) events during handling of the monitor unit or during operation in the use environment. Z**1** and Z**2** can be any suitable zener diode or other preferably fast response, high current semiconductor transient suppression device (such as General Instrument SA10A "Tranzorb" devices) with a rated breakdown voltage of about 10-Volts. These devices must also have maximum room-temperature reverse leakage below about 1 uAmp at +V (3-Volts). Capacitor C**1** is preferably a 0.1-uF stacked-film type transient bypass device connected across the +V bus and circuit Common (−V). Because the CMOS devices in the monitor circuit are all lightly loaded, relative to the equivalent series resistance of lithium cell BTY, a single small power supply bypass capacitor is all that is necessary for the entire circuit. Neither the type, or value of C**1** is particularly critical, but it should have good high frequency characteristics and low leakage (preferably well below 1 uAmp at +V).

[**0341**] The effective electrical impedance of disposable sensor **100** (RSNSR in parallel with CSNSR, connected between SC**1** and SC**2**) acts, in conjunction with reference resistor R**2**, to divide the voltage pulses applied to one (preferably Schmitt-type) input of U**9**, such that the output of U**9** will go high only during U**7**'s relatively brief double output pulses, and only at such times that the sensor impedance falls from its initial value (typically at least several megohms), to below about 500 kOhms due to the presence of either urine or feces bridging the conductive elements of the sensor within its capillary trap, as previously described. The simple "over-threshold" voltage determination of the "triggered" condition of the sensor by use of a Schmitt-trigger gate input of U**9** is made feasible by the decisive, and relatively long-lived conductivity-change produced by the structure of sensor **100** in response to either urine acting on the elimination-absorber, or due to the presence of fecal matter, as detected by monitor **500** with low duty-cycle, fast transition-time pulses. The lack of any requirement for relatively more power-consumptive and expensive precision comparator devices, as well as for any electronic latching function in the detection circuitry, are significant advantages of the elimination-absorber monitoring system.

[**0342**] The hysteresis effect provided by the typical CMOS Schmitt-trigger input gate employed for U**9** desirably prevents excessive current drain due to linear-region biasing of the gate, which would otherwise be produced by slowly-changing sensor conductivity. This hysteresis also prevents unstable or intermittent alarm activation when the sensor is marginally "triggered". As will be apparent to those skilled in the art, the illustrated Schmitt-trigger input configuration of U**9** (simplified for clarity) is not actually available as a single standard part, but the preferred Schmitt-trigger input capability can be readily provided by use of a separate Schmitt-type inverter (such as the 74HC14) in series with a standard AND gate (such as the 74HC08) or instead, the output of a standard Schmitt NAND (such as the 74HC 132) can be inverted to accomplish the same purpose. In fact, additional gate-delay in the sensor input (through R**3**) to U**9** is desirable to ensure that narrow (and energy wasting) output "glitches" are not generated by U**9** synchronous with the leading edge of each high-going input pulse arriving from U**8**, during the time periods when the sensor is being monitored, but is not yet triggered. This "gate-delay" method is more efficient than the alternative of inserting an additional delay capacitor (connected to a supply rail) at the R**3** input to U**9**.

[**0343**] In addition to acting as the detection threshold reference, resistor R**2** also serves to limit the absolute

maximum possible (short-circuit) current across SC1 and SC2/SC3 to about 1.5 uA during sensing pulses (and zero otherwise). R2, in conjunction with the rest of the low duty-cycle sensing pulse circuitry, also severely minimizes discharge of the battery (which is sealed inside the monitor) in the unlikely event that all three of the unit's sensor-connector pins **620**, **622** and **624**, are somehow shorted together, even for lengthy periods. Because of the single-cell battery's relatively high equivalent series resistance and low (approximately 3 Volt) output, the monitor circuit pose no potential for harm to users even if it were hypothetically applied directly across exposed wet skin bridging the connector contacts after a (worst-case) hypothetical short-circuit failure had somehow previously bridged Z2 and C1.

[**0344**] At any time that the attached sensor has become "triggered" as described above, the output of AND gate U9 continually produces short, double, positive-going pulses that are approximately the logical complement of the original output of U7. These pulses are applied through a combination of steering-logic gates U3,U4,U10 and U11 to activate either an audible or a visible alarm, depending on the existing output state of "toggle flip-flop" U1. As shown in **FIG. 23**, when the sensor is "triggered" and output Q of U1 is high, the double pulses from U9 are allowed by OR gate U3 and AND gate U4 to enable U5 (a simple CMOS-gate R/C relaxation oscillator, shown as the box labeled "U5 BEEPER OSC" in **FIG. 23**), which generates a suitable "square-wave" output only during the duration of the double enabling pulses to drive a low-power electro-acoustic beeper BPR (i.e., transducer **810** of monitor unit **500**) at near its resonant frequency (preferably approximately 2 kHz) thereby producing a "double-beep", which preferably repeats approximately every 3 seconds. As will be apparent to those skilled in the electronic art, BEEPER OSC U5 can be implemented in a number of common ways, and it is also possible for U5 to be directly powered by the output of U4 instead of enabled by it. The use of a separate oscillator which remains either quiescent or is alternatively powered-off except during the brief alarm pulses is important to conserve battery energy. Transducer BPR (same as transducer **810** in a preferred embodiment) can be any suitable piezoelectric or electromechanical transducer, preferably with average drive current requirements in the 10 mA range at 1.5 to 3-Volts, and sound output level of about 80 dB(A) at 10 cm (such as the transducer previously described with respect to audible signal assembly **800**). Similarly, when the sensor is "triggered" and output Q of U1 is alternatively low, the double pulses from U9 are allowed by OR gate-U11 and AND gate U11 to turn-on (i.e., double flash) visible alarm device LED at current level of about 5-10 mA. The LED can be any high-brightness, low current type as previously described with respect to visual signal assembly **750**.

[**0345**] As described above, the state of toggle flip-flop U1 controls which alarm mode (audible or visible) is activated after the attached sensor is triggered. U1 can be toggled by user operation of mode switch S1 (as previously described with respect to the mode change assembly **700**), which acts to pull the "T" input of U1 logically high from the normally low state maintained by pull-down resistor R1 (approximately 100 kOhms) which is connected to circuit common (−V). This toggling of U1 can only occur, however, while the monitor circuit is switched on by the proper insertion of connector tab assembly **170** of sensor **100** into monitor **500**. As previously described, the properly inserted sensor switches power to the monitor circuit by connecting contact **620** to contact **622** through the wider (**202**) of the sensor's two conductive strips **202** and **204**. At any time that MODE SWITCH S1 is activated (while the monitor unit is properly connected to a sensor) and U1 is thereby toggled, either of ONE-SHOTs U2 or U6 is alternatively triggered. If output Q of U1 is asserted, this in turn activates ONE-SHOT U2 (which, like U6, can be any suitable standard low power monostable circuit). U2 then produces a brief (approximately 0.2 second) output pulse. This pulse then causes a similarly brief audible "BEEP" of transducer BPR by enabling BEEPER OSC U5 through gates U3 and U4. If alternatively, output Q-bar of U1 is asserted, visible alarm device LED is instead similarly activated via ONE-SHOT U6 and gates U10 and U11. Typical CMOS gates, as shown in **FIG. 23**, are capable of driving either of the alarm devices directly up to currents of a few milliamps. As will be appreciated by those skilled in the electronics art, either BPR or LED can optionally have suitable current-limiting resistors connected in series with these devices, to alter the trade-off between power consumption during alarm activation and either volume or brightness, respectively.

[**0346**] As previously discussed, a truly convenient and reliable elimination-absorber monitoring system must have user interface and operating sequences that are exceptionally simple and intuitive. The present invention achieves this objective by means of its single mode switch and coupled alarm devices circuit combined with the automatic power switching of the system as described above, to provide all necessary operator interface functions for the monitoring system—including both the convenient changeover from audible to visible alarm mode, as well as the inherent and unmistakable demonstration of which mode is currently selected. Activation of the mode switch also clearly verifies the proper connection of a disposable sensor to the monitor unit. As will be appreciated by those skilled in the electronics art, at the expense of likely greater complexity, cost and energy consumption, additional circuitry could easily be provided to expand the scope of the self-test function that is initiated by connection of a sensor and subsequent activation of the mode switch to test any other aspects of the monitor circuitry and/or the connected sensor, while still using the same alarm devices to indicate a "ready" or "OK" status. It is similarly possible to link the initiation of any other useful indications such as the time of day, etc., or even purely amusing sounds, etc. to activation of the mode switch by simply cascading these various events into a sequence and/or by employing additional indication devices. Those skilled in the electronics art will also recognize that numerous alternative arrangements or choices of oscillator types, logic chips and/or combinations of discrete components (including one or more custom or semi-custom integrated circuits) could possibly be used to implement various embodiments of the present invention without departing from this invention's basic elements and methods.

[**0347**] Microcontroller-Based Alternate Embodiments of Circuit **900**

[**0348**] As examples of alternative embodiments of monitor circuit **900**, **FIG. 24A**, **FIG. 24B**, **FIG. 24C** and **FIG. 24D** show four variations of alternative programmable microcontroller-based embodiments. As is well known by those involved with the electronics industry, several families of "low-end" CMOS microcontroller chips (such as a Micro-

chip Technology PIC12CXX device shown in these diagrams), having various attractive specifications and capabilities, are available from a number of manufacturers at relatively low cost. The use of a microcontroller chip, instead of the discrete logic of **FIG. 23**, offers the advantage of lower component-count on the monitor unit's circuit board and as a result, also likely lower assembly cost. A microcontroller-based embodiment may also minimize the range of observed variations in the time-based functions of the monitor system from unit to unit, by reducing the number of separate resistor/capacitor time-constant combinations needed, although this is not really a critical issue, given the low timing precision required (probably no better than about +/−10%, in general). Another possible advantage would be the relative ease of changing timing values or other aspects of the monitor system's operation, if desired, by revising the firmware programmed into the microcontroller chip—instead of by changing component values or other hardware. Also, the different functions can easily have separate timing constants without incurring the overhead of additional hardware (such as durations used for sensor-pulsing vs. alarm indication, or audible vs. visual alarm indication).

[**0349**] **FIG. 24A** shows an alternate embodiment of the present invention wherein a PIC 12Cxx microcontroller U**1-24**A executes programmable code (i.e., firmware) as represented by the flow-chart shown in **FIG. 25**. Only a single oscillator is needed, because the PIC microcontroller has an internal clock oscillator whose frequency is determined by external R/C components R**4-24**A and C**2-24**A which can clock the microcontroller continuously while a sensor is connected to switch-on power. With suitable timing provided by either firmware or on-chip timer delays, the microcontroller chip runs a continuous "monitor loop" as shown in the flow chart during which it repeatedly polls (and debounces) mode switch S**1** (approximately every 0.1-second), pulses and monitors the connected sensor **100** (about every 3 seconds), and also generates, when appropriate, suitable alarm signals to drive BPR and LED—in effect approximately emulating the functions of the discrete embodiment of **FIG. 23**. Note that the user interface, the control sequences and sensing methods, the automatic power switching of battery BTY via sensor connections SC**2** and SC**3** (contact pins **620**/**624**), and the ESD protection and bypass configurations are all essentially the same as in the discrete logic embodiment of **FIG. 23**. Also note that microcontroller U**1-24**A even has a Schmitt-trigger input line **12** connected to the same resistor network for the sensing portion of the circuit, as described in the discrete logic embodiment. A significant difference in this embodiment (as compared to the previous discrete logic version of **FIG. 23**) is that here the sensor can, without extra hardware, be advantageously pulsed with much narrower, single pulses (approximately 10-milliseconds long) as opposed to the double 0.1-second pulses or single 0.2-second pulses that are used for alarm or mode-change indications, respectively. As will be appreciated by those skilled in the electronics and firmware programming arts, numerous alternative arrangements or choices of oscillator type, microcontroller chip and configuration of I/O (i.e., input/output) lines as well as various firmware implementations could possibly be used to produce various embodiments of the present invention without departing from this invention's basic elements and unique combination of methods.

[**0350**] On the other hand, likely disadvantages of a microcontroller-based embodiment of monitor circuit **900**, relative to the discrete-logic version of **FIG. 23**, include dependence on a sole-sourced key component (the microcontroller chip itself), possible increased susceptibility to improper operation due to electrical noise or interference, and relatively greater energy consumption. As will be appreciated by those skilled in the art, noise and interference susceptibility can be a problem with microcontroller-based systems in general, usually due to unintended resetting of data stored in RAM (random access memory) registers. Such an event is particularly troublesome if the data corrupted is critical to functions of the system, and most especially so if program flow is altered due to corruption of the microcontrollers program-instruction counter (which causes unexpected and possibly unacceptable "jumps" in program execution). So-called "watchdog timers" are commonly used to automatically reset the program counter in case of such gross occurrences where the program execution has "hung up" for more than a certain period of time (the PIC microcontroller chips shown in **FIG. 24A**, **FIG. 24B**, **FIG. 24C**, and **FIG. 24D**, each have a built-in watchdog timer that could optionally be used for this purpose), but this alternative comes with the expense of added power consumption to continuously run the watchdog oscillator and counter.

[**0351**] Relatively increased power consumption by a microcontroller-based embodiment or the present invention stems mainly from the otherwise core advantage of programmed logic in general, i.e., the substitution of program-code execution by the microcontroller for dedicated hardware. Microcontrollers typically require several clock cycles to accomplish the execution of a single program instruction, and they must therefore have a clock frequency several times higher than the highest repetition rate of any output signal to be generated by execution of firmware. This means that if, in the pursuit of minimum component-count, a microcontroller is employed to generate a 2-kHz square wave signal to drive the audible alarm device of the present invention (as shown in **FIG. 24A**) the input clock frequency for the microcontroller (in this case) would have to be at least 16 kHz. Because total power consumption in CMOS logic is nearly proportional to clock frequency, this arrangement is considerably more energy-expensive than using a 2-kHz oscillator. Also, generation of a continuous 2-kHz square wave for approximately 0.1-second long takes many (hundreds in this case) bytes of instruction code if the microcontroller cycle-time is so slow as to need fully linear coding (where an output line is turned ON/OFF/ON/OFF . . . etc., with successive instructions continuously executed for 0.1-second).

[**0352**] For the above reason, the circuit of **FIG. 24A** can be modified into the version shown in **FIG. 24B**, wherein the pulses from a 2-KH oscillator OSC are used to clock a PIC 12Cxx microcontroller U**1-24**B, and are also gated (using an additional logic chip U**2-24**B under firmware control via an output line O**1** of microcontroller U**1-24**B) directly to audible alarm transducer BPR. With this circuit, the microcontroller can now be clocked at the same 2-kHz frequency used for alarm signals. Although this arrangement is more energy conservative than that of **FIG. 24A**, it still requires the microcontroller to be clocked at 2-kHz—a considerably faster rate than is needed to accomplish any of the monitor unit's other functions via the execution of firmware.

[0353] **FIG. 24C** shows another variation of a microcontroller-based monitor embodiment where a separate hardware 2-KHz oscillator OSC (similar to U5 BEEPER OSC as used in the discrete embodiment of **FIG. 23**) is employed and where a PIC 12Cxx microcontroller U1-24C is clocked at the minimum rate (approximately 128 Hz) needed for it to accomplish all needed functions (without use of interrupt-driven code) other than direct audible tone generation. As will be apparent to those skilled in the art, it is alternatively possible in designs with various available microcontroller chips for a relatively slow clock oscillator (operating at 128 Hz, for example) to be combined with a frequency divider to periodically "wake-up" the microcontroller from a relatively lower-current "sleep" mode by resetting it each time it wakes up (every 3-seconds, for example), thereby combining, in the context of the present invention, the features of even lower average frequency clocking with repetitive resets which can effect recovery from "hang-up" events without the current consumption drawback of a dedicated watchdog timer. With this approach, the input employed to monitor mode switch S1 would have to be configured to wake up the microcontroller from "sleep" directly upon operation of the switch instead of the switch input being polled by the microcontroller only every 3-seconds (during each wake-up period), in order to provide adequately fast switch response time, even if the switch is momentarily operated while the microcontroller happens to be "asleep".

[0354] Finally, **FIG. 24D** shows a compromise variation of monitor circuit **900** where a PIC 12Cxx microcontroller U1-24D has its clock oscillator frequency dynamically changeable under firmware control, from a 128-Hz rate needed for most of the monitor's functions to a 16-kHz rate necessary for direct audible alarm drive at 2-kHz. This is done by using the corresponding output line O4-24D, of microcontroller U1-24D, that pulses the sensor—to also simultaneously increase the charging current available to the microcontroller's internal relaxation oscillator through additional resistor R5-24D (and thereby to increase the frequency of oscillation for short bursts, when needed). Also added, in this embodiment, is the blocking-diode D1-24D (any low-leakage type such as a 1N4151), which eliminates reverse current flow when the output line is returned to the low condition, causing the clock frequency to return to the 128-Hz rate. Although any alternative microcontroller chip and/or available output line could be used for the purpose of clock frequency changing, because the inexpensive PIC chip shown is packaged as an 8-pin device, there is no separate I/O line available. This means that the microcontroller must run at 16-kHz throughout the duration of each sensing pulse, but the sensing pulses can be easily made much shorter than the 0.1-sec used in the discrete embodiment of **FIG. 23**, because the microcontroller does not need additional hardware to provide suitably longer pulses (after the sensor has been triggered) for alarm indications. Pulses can be produced by the microcontroller with minimum duration equal to four clock periods (a single instruction time) without additional hardware. Thus, the "pre-triggered" sensing pulses (and hence the pre-triggered periods of relatively higher current operation can be less than one millisecond long, to both conserve energy and reduce the ionic-dissociation effect (previously described). Also, as shown in **FIG. 24D**, in order to allow the sensor-pulsing output line of microcontroller U1-24D to have the correct logic sense (i.e., go "high" when asserted), for appropriately accelerating the clock oscillator, the power-switching sensor contacts SC2 and SC3 are connected so as to switch the common end (i.e., −V) of battery BTY-24D instead of the +V end as in the previously described circuit **900** embodiments (**FIG. 23** and **FIG. 24A**, **FIG. 24B**, and **FIG. 24C**). This arrangement ensures that zero voltage is applied across the sensor, except during the low duty-cycle sensing pulses, and also that the fast transition-time of the pulses can exploit the high-frequency signal propagation characteristics of the material to be sensed, just as in the previous embodiments as described.

[0355] System Energy Requirements and Battery Life

[0356] A key requirement for a practical elimination-absorber monitoring system is that it be capable of continuous use for the entire diaper-wearing portion (typically the first 2 years) of a baby's life, without need for either battery changing or recharging. Based on many laboratory measurements, the electronic circuit using the methods and control strategies of the present invention, as shown in **FIG. 23**, typically operates at such low total energy consumption, that two full years of continuous operation (after extended storage) can be confidently expected with the system's single 560 mA-Hour, 3 Volt lithium coin cell BTY unit (such as a Panasonic CR2354). Cell BTY is intended to be permanently sealed into monitor unit **500** during the manufacturing process. The maximum electrical current requirements and resulting battery life are calculated as follows by using the relationship:

$$\frac{\begin{array}{c}\text{Alarm-On Current} \times \text{Alarm Events} \times \text{Alarm Pulse Time} \\ 8.0\ \text{mA} \times (5\ \text{alarms} \times 0.20\text{-Hr/24-Hrs}) \times \\ (0.2\text{-sec}/3.0\text{-sec}) = 22.2\ \text{uA}\end{array}}{\text{To yield a Total Average Current} = 26.6\ \text{uA}}$$

[0357] System Test Device

[0358] A diaper-simulating, test strip device **950**, for use with the elimination-absorber monitoring system, is shown in **FIG. 30A** and **FIG. 30B**. The test strip has a substrate consisting of a thin tab **960**, of electrically insulating material. Tab **960** has length and width similar to that of connector tab stiffener **166** of sensor **100** (as previously described), and can be made from the same material (such as 0.010-thick polyester sheet). This tab has a side **961** (illustrated in **FIG. 30A**), with a first area **964** of relatively electrically-conductive coating (such as thin, i.e., 0.001-inch, aluminum foil or other suitable material) disposed as shown. Side **961** also has a second area **965** of relatively electrically-conductive coating, which is separated from area **964** by an insulating gap **966**. A chip resistor (or other device) **968** is preferably disposed on side **961**, to bridge areas **964** and **965**. Device **968** effectively simulates the value of conductivity that would be measured by monitor **500** (across channel **166**, and thus between conductive strips **202** and **204** of a connected sensor **100**), when a very small quantity of fecal matter is present in a sensor-equipped diaper. This device and its value (preferably a chip resistor, with value approximately 1.5-2.0 MegOhms, or other appropriate device such as a chip capacitor) are selected to have conductivity (as measured by the monitor) somewhat greater than, but approximately corresponding to, the minimum

presentation of fecal matter required for monitor **500** to initiate alarm indications (as has been previously described). The tab's opposite side **962** (illustrated in **FIG. 30B**) has area **967** of relatively electrically-conductive coating, which is preferably equivalent in all aspects to first area coating **964** on side **961**. Side **962** does not, however, have a conductive area corresponding to second area **965**.

[**0359**] When substituted for sensor **100** (by simply being inserted into slot **600**/**610** of monitor **500**), the test strip bridges contacts **620** and **622** in unit **500**, thereby connecting power in the monitor circuit. Depending on which way the strip is inserted (i.e., which side is "up"), the strip also simulates either a "triggered" or "un-triggered" sensor. With this arrangement, only insertion of the test strip with side **961**"facing up" effectively connects device **968** between monitor contact **624** and contacts **620**/**622**, thereby simulating the "triggered" state. The test strip is preferably provided with a pair distinctive indicative markings **971** and **972** on sides **961** and **962** respectively, so that the user can easily select the desired function. In a preferred embodiment, there also may be provided a suitable hole or opening **974** for the purpose of conveniently retaining the test strip device on a key-ring, thus providing quick access to, and avoiding loss of the relatively small test strip.

[**0360**] In an alternate embodiment, test strip **950** could have a single larger conductive area on side **961**, combining areas **964** and **965** and thus eliminating gap **966**, or areas **964** and **965** could be connected by a conductive trace or other shunt. Such arrangement would function similarly to the embodiment previously described, but would not verify the sensitivity of the system—rather only its more basic operational status. Alternatively, a test strip device could have suitable disposition of one or more conductive surfaces or reference devices corresponding to the function of side **961** substantially on one end, and at the other end (on the same side) have elements functionally corresponding to side **962**, so that rotation of the strip end-for-end, instead of turning it over, would accomplish the same purpose. As will be readily apparent to those skilled in the relevant arts, various geometric shapes and orientations of relatively electrically-conductive and also relatively non-conductive surfaces could be alternatively disposed on, or within any suitable piece or assembly of material so as to appropriately simulate the connection of either a triggered or an un-triggered sensor, and thereby appropriately activate the monitor unit of an elimination-absorber monitoring system. Either the positional orientation of the test device and/or the monitor unit can be changed to allow a single device to simulate either sensor state, or alternatively two separate devices can be employed.

[**0361**] This simple and inexpensive device is useful in several use-environment situations, such as for demonstrating the alarm modes and "triggered" operation of the monitor to a new caregiver, or for verifying that foreign material (such as adhesive or dust) has not accumulated in the connector area of the monitor unit (to cause false triggering or prevent proper sensor connection), or that the connector spring or other means has not been bent or compromised so as to prevent proper connection to the sensor (and therefore requiring cleaning or replacement of a clip or other portion of the connector means).

[**0362**] Manufacture and Assembly

[**0363**] Manufacture and Assembly of Sensor **100**

[**0364**] The materials employed in manufacture of sensor **100** are, to the extent possible, biodegradable, non-toxic, light, and readily available in large quantities. The various sensor embodiments can be manufactured by simple manual processes. For example, pre-punched layers can be aligned and affixed via the respective adhesive substrates, followed by wrapping with the protective peel-off cover. Alternatively and much preferably, high-speed, continuous strip production methods can be used. For example, the various layers can be assembled by: heat cured, co-reactive or catalyst cured adhesives, contact or pressure-sensitive adhesives, heat staking, hot-rolling or pressing, ultrasonic welding, induction heating (in the case of metallic strips), stapling, eyeleting, riveting and the like.

[**0365**] In one representative sequence, the component materials are provided already cut to width, perforated (in any or all cases) and spooled on large rolls, to be fed into the manufacturing process. The various layers can be pre-punched on the reel before assembly, or on the way to the joining point. Some or all of the components could be laminated between pressure rollers or plates into a continuous multi-layer strip, or alternatively, certain components or sub-assemblies could be fed as pre-cut components and "dropped" onto a moving substrate strip at the appropriate locations, prior to a final "cut-off" step for each finished unit.

[**0366**] Additional alternative embodiments of layer construction, other than those previously and specifically described, may be preferred to maximize the number of tape-like materials employed in the manufacturing process, to be continuously laminated from bulk supply reels prior to final cutoff of finished sensors, thereby minimizing lateral combination of precut piecewise materials but potentially inserting the requirement for selective adhesive application and/or bonding processes instead of, or in addition to, the use of prefabricated "double-sticky" tapes. In one preferred manufacturing process, the second double-sided adhesive layer **300** is the first component fed into the process. As mentioned previously, layer **300** can be supplied with adhesive already attached, or the adhesive(s) can be applied to suitable portions of both its surfaces as the first step, i.e., prior to attaching layers **250** and **350**, but preferably after the perforations in layer **300** are punched or cut out, to avoid or minimize the production of sticky punched fragments. Holes **310** along the edges of layer **300** may advantageously (in addition to their other functions) serve as "sprocket holes" to facilitate the precise, high-speed transport of roll or sheet-fed sensors through the assembly process. Alternatively, the sensors could be laminated with several, or many units in parallel out of wider material rolls, with the final cut-off being more like a "cookie-cutter" operation than like a "taffy-cutter" one. In still another variation, some or all of the components could be "stack laminated" in a fixture, either "one-up" or "many-up" in large sheets.

[**0367**] Embodiments of sensor **100** that are intended for direct-incorporation into diapers can utilize any of the previously described variations of portion **450**, either disposed on, or integrated with portion **474** on the front of the diapers. The in-diaper portion can be simply laminated into the diaper, either sequentially or simultaneously during the manufacturing process, with conventional diaper layers being suitably modified as is necessary.

[0368] The manufacturing process adjustments necessary to produce the various embodiments of sensor **100** will be apparent to those of ordinary skill in the art. Manufacture of the sensor embodiment that is incorporated as part of a disposable diaper, as opposed to an add-on to a diaper, will take account of the materials used and assembly process for that particular diaper. Alternatively, a separate and relatively complete sensor can simply be applied to the inner lining of a disposable diaper as a final step in an otherwise conventional diaper manufacturing process.

[0369] Manufacture and Assembly of Monitor **500**

[0370] The monitor is manufactured using techniques that are standard in the electronics industry, for the processing of through-hole and/or surface-mount technology components on typical printed circuit board materials. In one example manufacturing sequence for a preferred embodiment as shown in **FIG. 29A** (and referring to **FIG. 21A**), all circuit components including lithium coin-cell BTY, including three sensor connector contact pin sockets **621**, **623** and **625** (but excepting contact pins **620**, **622** and **624**), are mounted and/or soldered on a single, small (approximately 1.2 inch× 2.0 inch×0.06 inch thick) rigid printed circuit board **905** which, after assembly, soldering, cleaning and test, is "plugged" onto connector contact pins **620**, **622** and **624** which have been previously inserted through molded plastic back case portion **514**. These pins may be inserted and sealed in place by several methods, including press-fitting, hot-pressing, induction heating, ultrasonic welding, or insert-molding into the back case portion—or encapsulated via "potting" of the monitor case with a suitable waterproof filler such as epoxy resin or silicone rubber, thus simplifying reliable liquid-tight sealing of the assembly during its manufacture and also increasing its ruggedness. The heads of the contact pins are exposed in connector recess area **600**, so that their shank portions protrude through, and continue into the interior of the case, passing through the plane of printed circuit board **905**. The circuit board incorporates suitable miniature through-hole sockets **621**, **623**, and **625**. These sockets are preferably of the gold-plated, wiping contact-spring type, to receive and reliably interconnect the contact pins. The fact that entire, fully-functional electronic circuit board assembly **910** comprises a single sub-unit that is independent of its case (and that can be easily tested and placed in inventory for later packaging) is a substantial advantage of this embodiment.

[0371] At this point, circuit assembly **910** is preferably held in place by suitable protruding and supporting features in the mating portions **512** and **514** of the case **510**, then one or more of several standard coating/potting/sealing methods is used (such as epoxy resin or silicone injection) to both seal and mechanically protect the unit. The front case portion can be physically bonded to the back portion by the same process that seals and protects the case, or it can be separately attached by another process step such as ultrasonic welding. Alternatively, the internal "potting" or injection of other filling material (including inert gas or partial evacuation of the case) can be done either after, or simultaneously as, the two case portions are joined. Next, faceplate overlay **517** is adhered to the shallow aligning recess in the front face surface of upper case portion **512**. Spring clip/plate **610** can be attached to recess **600** in back case portion **514** as a final step, or at any earlier time after the contact connector pins are inserted into the back case portion.

[0372] **FIG. 29B** illustrates an assembly sequence for an alternate version of monitor unit **500**, that employs an edge-type embodiment of the flex-tab connector means as shown in **FIG. 21B**. In this situation, three flat edge-type contact springs **621**-A, **623**-A and **625**-A are disposed on circuit board **905**, and are designed to press securely against the shanks of contact pins **620**, **622**, and **624**, when circuit assembly **910** is pressed into place inside back case portion **514**. An alternative embodiment (to **610**) of connector clip/plate **610**-A is retained by a pair of dovetail slots **617** in case section **514**. Other more detailed process variations potentially suitable for assembly of monitor/alarm **500** will no doubt be apparent to those skilled in the electronics manufacturing art, in light of these specifications.

[0373] Methods of Use

[0374] Application to a Disposable Diaper (Refer to **FIG. 2A**)

[0375] Sensor **100** is unwrapped from protective bottom cover **110**, revealing lower adhesive **156** of layer **150** and exposed adhesive **456** on the bottom edges of layer **300**, as well as adhesive **456** on the bottom of layer **452**. Cover **110** is disposed of. Sensor **100** is positioned above a diaper, centering fold line **342** over the top front rim, with portion **450** extending over the outside front of the diaper. While stretching the diaper flat, the "inside-diaper" portion of sensor **100** is smoothed into place. The upper portion of sensor **100** that protrudes proximally over fold line **342** is adhered to (typically plastic-coated) section **474** of the diaper by adhesive **456**. (This diaper can now be set aside for later use.)

[0376] Attachment of the Monitor/Alarm (Refer to **FIG. 2B**)

[0377] Top protective layer **455** is peeled off and discarded. Holding monitor unit **500** in one hand, connector tab **170** is inserted fully into slot **600**/**610** at the top edge of the monitor as the monitor is engaged with locating block **470**. While holding monitor **500** in place, the end of translucent flap **460** is grasped and stretched firmly over the top of the unit. The proximal portion of the flap is then contacted with the exposed adhesive **304** exposed at the top front of the diaper, securing the monitor from tampering or removal.

[0378] Operation (Refer to **FIG. 2B**)

[0379] Using a finger tip, dot **702** on the face of monitor **500** (covering mode-change assembly **700**) is momentarily pressed to select either the "beep" or the "blink" mode. If a "beep" is heard—the unit is set to beep; if indicating light **750** blinks in upper "balloon" symbol **518** on the monitor face—it is set to blink. Such response also verifies proper monitor operation and that sensor **100** is properly mated (and thus connected with) the monitor unit. The dot can be pressed again at any time to change the beep/blink mode. Subsequent automatic recurring activation of either audible or visual indicators means that a "diaper needs changing" condition exists.

[0380] Removal (Refer to **FIG. 2B**)

[0381] When changing diapers, to remove the monitor unit—edge of pull-tab **463** of translucent flap **460** of the sensor is grasped and pulled down away from the diaper. The monitor unit is lifted slightly (away from engagement with locating block **470**) and it is slid straight downward—away

from tab **170**. The diaper and attached sensor pad are discarded as usual, and diaper monitor **500** is ready to be attached to a sensor on the next diaper.

EXAMPLE

[**0382**] (The following example should not be considered as limiting the scope of the invention, but merely as being illustrative and representative thereof.)

[**0383**] Preliminary In-Use Effectiveness Tests and Summary of Results

[**0384**] The elimination-absorber monitoring system (shown in **FIG. 2B**) was initially use-tested in multiple two, three and four-day sessions with a healthy male child subject, beginning at age 8 months. The caregivers in these trials were the adult parents of the test subject. After receiving basic instruction in use of the system, the caregivers unwrapped and applied prototype disposable sensors to various popular brands and models typical of commercially available disposable diapers ("one-at-a-time", just before each diaper change) according to the "method of use" procedure as previously described. In each test session, approximately 20 disposable sensors were used, with each sensor being applied by one of the caregivers. Each sensor's performance (relative to the caregivers' expectations) was discussed and noted by an observer after the next change of diaper. Caregiver comments were also noted immediately after each application of the sensor and monitor to the diapers. The results of inspecting the soiled diapers (as well as any general observations by the caregivers during use of the system) were discussed and recorded after each change cycle. None of the test subject's or caregivers' routine activities were restricted or modified, other than by the application of sensor and removal/re-application of the monitor unit during diaper changes, and also by occasional activation of the monitor's "mode-switch" by the caregivers. Mode-switch activation was done to verify system operation after each diaper change, and to select either the audible or the visible alarm mode, as the caregivers desired. For example, the visible alarm mode was always selected for privacy (and confidentiality) when outside a controlled-access test facility.

[**0385**] In each instance, according to the caregivers, the system appeared to respond to the appropriate alarm criteria. There were no observed false positive or false negative responses. In reporting their conclusions after completion of the tests, the caregivers expressed the opinions that their use of the system had resulted in significantly improved convenience of care. In several instances, they also reported that use of the system had initiated more timely diaper changes than would likely have occurred with use of their conventional checking methods. Moreover, the resulting monitor-suggested diaper change intervals appeared to closely replicate the expected "norm" as had been previously observed when only traditional methods were used. In summary, the elimination-absorber monitoring system functioned as intended, in accordance with the criteria of the present specification.

[**0386**] Variations of the Disclosed Embodiments

[**0387**] While the present invention has been described with reference to the specific embodiments thereof, it should be understood by those skilled in the art that various changes may be made and equivalents may be substituted without departing from the true spirit and scope of the invention. In addition, many modifications may be made to adapt a particular situation, material, composition of matter, process, process step or steps, to the objective, spirit and scope of the present invention. Any such modifications are intended to be within the scope of the claims appended hereto. All patents and publications cited above are hereby incorporated by reference.

1-3. (Canceled)

4. A sensor for use with an elimination-absorber monitoring system said sensor comprising:

sensing means and a flow-baffling layer disposed to divert direct flow of a liquid to be sensed around said flow-baffling layer prior to detection by said sensing means;

a first liquid-permeable flow-conducting layer disposed adjacent said flow-baffling layer on the side of said flow-baffling layer opposite said sensing means, to collect and conduct a liquid to be sensed across said flow-baffling layer; and

a second liquid-permeable flow-conducting layer, disposed opposite said first flow-conducting layer relative to said flow-baffling layer, to conduct liquid from said first flow-conducting layer, around said flow-baffling layer and toward said sensing means,

wherein adjacent portions of said first and second liquid-permeable flow-conducting layers extend beyond an outer edge of said flow-baffling layer and are in fluid communication to conduct liquid around said flow-baffling layer and into said second flow-conducting layer.

5. The sensor of claim 4 wherein a portion of said first liquid-permeable flow-conducting layer extends beyond an outer edge of said second liquid-permeable flow conducting layer to conduct liquid to an elimination-absorber.

6. A sensor for use with an elimination-absorber monitoring system, said sensor comprising:

sensing means;

a flow-baffling layer disposed to divert direct flow of a liquid to be sensed around said flow-baffling layer prior to detection by said sensing means;

a cover layer disposed on the side of said flow-baffling layer farthest from said sensing means; and

a liquid-permeable flow-conducting layer disposed on the side of said flow-baffling layer closest to said sensing means to conduct liquid around said flow baffling layer and toward said sensing means.

7. The sensor of claim 6 further comprising a relatively liquid-impermeable layer disposed opposite said sensing means with respect to said flow-baffling layer.

8-9. (Canceled)

10. The sensor of claim 4 comprising a relatively liquid-impermeable layer disposed opposite said flow-baffling layer with respect to said sensing means and said second flow-conducting layer to form a capillary channel within said sensing means.

11. The sensor of claim 10 wherein:

adjacent portions of said first and second liquid-permeable flow-conducting layers extend beyond an outer

edge of said flow-baffling layer and are in fluid communication to conduct liquid around said flow-baffling layer and into said second flow-conducting layer, and

a portion of said first liquid-permeable flow-conducting layer extends beyond an outer edge of said second liquid-permeable flow conducting layer.

12. The sensor of claim 4 comprising a series of openings through said flow-baffling layer of sufficient size and shape to permit the passage of fecal matter to contact said sensing means, while deterring contact between said sensing means and the skin of a wearer of the elimination-absorber.

13. The sensor of claim 12 wherein said openings are disposed posterior to the sensor portion most likely to be directly impacted by a drop or stream of urine.

14. (Canceled)

15. The sensor of claim 4 wherein said sensor is incorporated as part of a disposable diaper.

16. The sensor of claim 4 wherein said sensor is adapted for application to an elimination-absorber, comprising:

means for affixing said sensor to the elimination-absorber, and

an optional cover layer for separating said first flow-conducting layer from the skin of a wearer of the elimination-absorber.

17-22. (Canceled)

23. The sensor of claim 12 wherein said liquid-impermeable layer is relatively hydrophobic as compared to said absorbent layer even when said absorbent material becomes saturated.

24-26. (Canceled)

27. The sensor of claim 15 further comprising a monitor/alarm unit retainer, said retainer comprising:

an interlocking protruding or receiving portion, corresponding with a mating portion on an elimination-absorber monitor, and

an elastic or semi-elastic flap adapted to be stretched over a monitor/alarm unit, said flap being permanently attached at a distal end to said sensor or said elimination-absorber, and having a proximal end a portion of which is adapted to be releaseably adhered to said sensor, said elimination-absorber, or to another portion of said flap.

28. The sensor of claim 16 further comprising a monitor/alarm unit retainer, said retainer comprising:

an interlocking protruding or receiving portion, corresponding with a mating portion on an elimination-absorber monitor, having adhesive means for attachment to the elimination-absorber, and

an elastic or semi-elastic flap adapted to be stretched over a monitor/alarm unit, said flap pending from the distal end of said protruding or receiving portion and having a proximal end, a portion of which is adapted to be releaseably adhered to said sensor or said elimination-absorber.

29. (Canceled)

30. The sensor of claim 27 further comprising a releasable circuit electrical connector, said connector comprising a flexible tab portion adapted to be received in a tab-receiving portion of an elimination-absorber monitor,

said tab portion having two or more conductive members of said sensing means disposed on a resilient support.

31. The sensor of claim 30 wherein said tab portion is disposed through a front surface of said diaper above said interlocking protruding or receiving portion.

32. (Canceled)

33. An elimination-absorber monitoring system kit having a sensor of claim 30 and a monitor/alarm unit that comprises:

a power source,

an alarm means,

an interlocking protruding or receiving portion corresponding with the portion on said monitor/alarm unit retainer,

a releasable sensor connector comprising a tab-receiving portion having two or more protruding contacts arranged to engage said conductive members, lateral surfaces for guiding and positioning said tab, and having means to deform said resilient support thereby retaining said tab portion while maintaining its orientation and pressure against said contacts to ensure continuous electrical connection of said conductive members with said contacts, and

electronic circuitry employing relatively narrow, relatively low duty-cycle pulses to measure conductivity or capacitance between a pair of spaced conductors or semiconductors that are disposed within or that span an appropriate measurement path relative to the elimination-absorber to be monitored and actuates said alarm means when the elimination-absorber needs to be changed.

34-43. (Canceled)

44. A fluid-sealed or contaminant-resistant audible signal transmission means for a case, enclosure, or panel of an electronic device, said means comprising:

a sound permeable, structurally supportive opening in said case, enclosure or panel disposed behind an audibly transmissive, relatively thin flexible portion of a sealing membrane, said opening or a corresponding reduced thickness portion of said membrane allowing said membrane to vibrate freely in response to acoustic pressure waves traveling either to or from the outermost vibrating member of an electro-acoustic transducer disposed within said device, but whereby the maximum deflection of said membrane is constrained to be within its elastic limit, thereby protecting said membrane from mechanical damage without excessively attenuating the sound transmission to or from said transducer during intended operation.

45. A fluid-sealed or contaminant-resistant, high viewing/acceptance-angle optical signal transmission means for the case, enclosure, panel or the like of an electronic device, said means comprising:

an electro-optical source/detector having a relatively narrow beam exit/entrance angle, respectively, said source or detector being disposed within or behind a through-opening in said case, enclosure or panel, whereby said beam exit/entrance angle from/to said source or detector is substantially contained within said opening,

said through-opening being sealed by a relatively thin, substantially optically-permeable, relatively permanent covering,

said through-opening being further covered by a removable cover layer or flap of relatively thin, substantially optically-permeable material, whereby said removable cover layer acts to mechanically protect and help retain said case, enclosure or panel in a desired position while allowing the relatively unrestricted passage of said optical signal to or from said source/detector, and also whereby the presence and the optical properties of said cover layer or said permanent covering cause the useful viewing/acceptance-angle relative to said case, enclosure or panel to be substantially wider than said beam exit/entrance angle.

46-47. (Canceled)

48. The sensor of claim 5 comprising a relatively liquid-impermeable layer disposed opposite said flow-baffling layer with respect to said sensing means and said second flow-conducting layer to form a capillary channel within said sensing means.

* * * * *