US 20180062130A1

(19) United States

(12) Patent Application Publication

(10) Pub. No.: US 2018/0062130 A1

(43) Pub. Date: Mar. 1, 2018

Tsutsui et al.

(54) **IMPACT RESISTANT BATTERY ENCLOSURE SYSTEMS**

(71) Applicant: **Purdue Research Foundation**, West Lafayette, IN (US)

(72) Inventors: **Waterloo Tsutsui**, West Lafayette, IN (US); **Yuezhong Feng**, Waizi (CN); **Weinong Wayne Chen**, West Lafayette, IN (US); **Thomas Heinrich Siegmund**, West Lafayette, IN (US)

(73) Assignee: **Purdue Research Foundation**, West Lafayette, IN (US)

(21) Appl. No.: **15/797,191**

(22) Filed: **Oct. 30, 2017**

Related U.S. Application Data

(62) Division of application No. 14/551,670, filed on Nov. 24, 2014, now Pat. No. 9,806,306.

(60) Provisional application No. 61/908,682, filed on Nov. 25, 2013, provisional application No. 61/908,685, filed on Nov. 25, 2013.

Publication Classification

(51) **Int. Cl.**

H01M 2/10	(2006.01)
A62C 3/07	(2006.01)
A62C 3/16	(2006.01)
A62C 99/00	(2010.01)

(52) **U.S. Cl.**

CPC ***H01M 2/1094*** (2013.01); ***H01M 2/1077*** (2013.01); *A62C 99/0045* (2013.01); *A62C 3/16* (2013.01); *H01M 2220/20* (2013.01); *A62C 3/07* (2013.01)

(57) **ABSTRACT**

Battery enclosure arrangements for a vehicular battery system. The arrangements, capable of impact resistance include plurality of battery cells and a plurality of kinetic energy absorbing elements. The arrangements further include a frame configured to encase the plurality of the kinetic energy absorbing elements and the battery cells. In some arrangements the frame and/or the kinetic energy absorbing elements can be made of topologically interlocked materials.

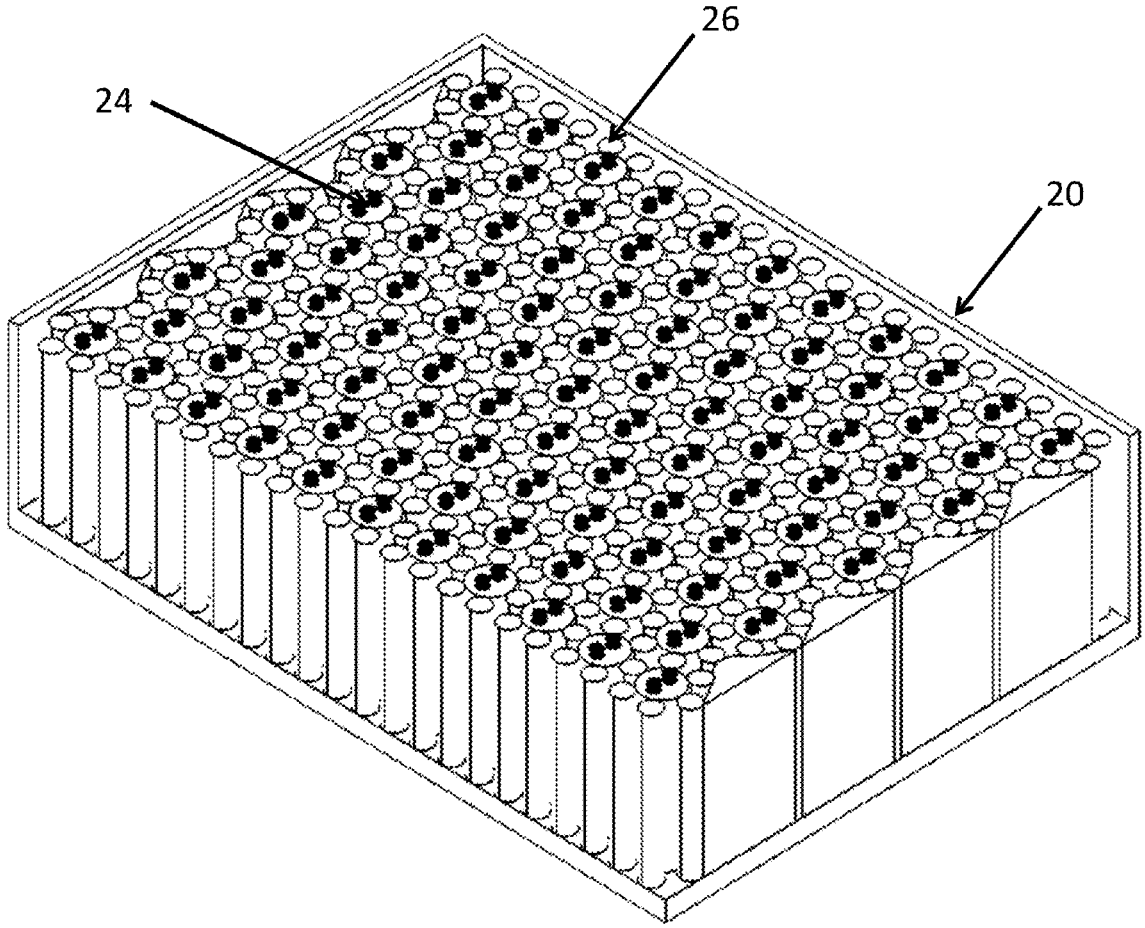

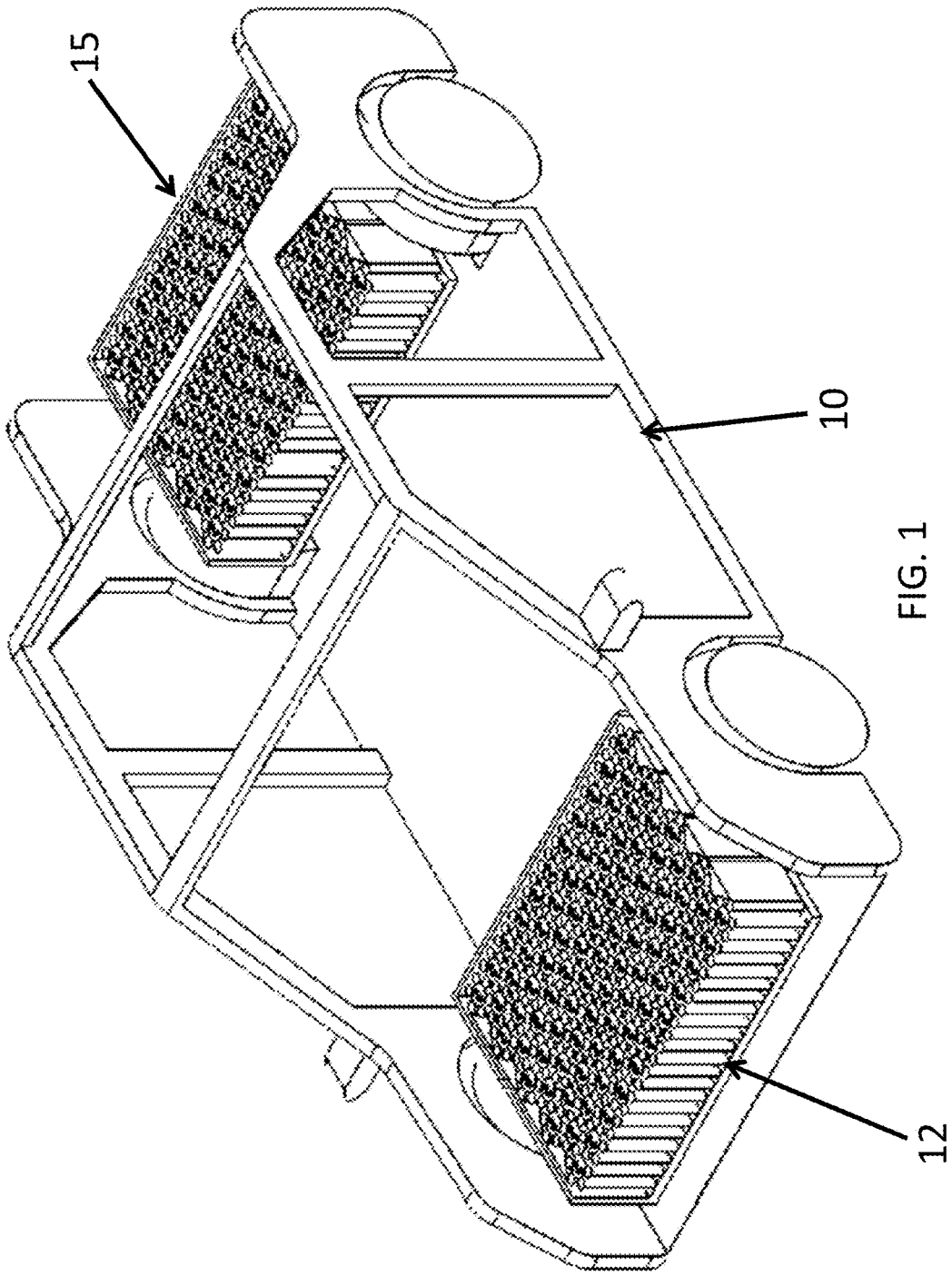

FIG. 1

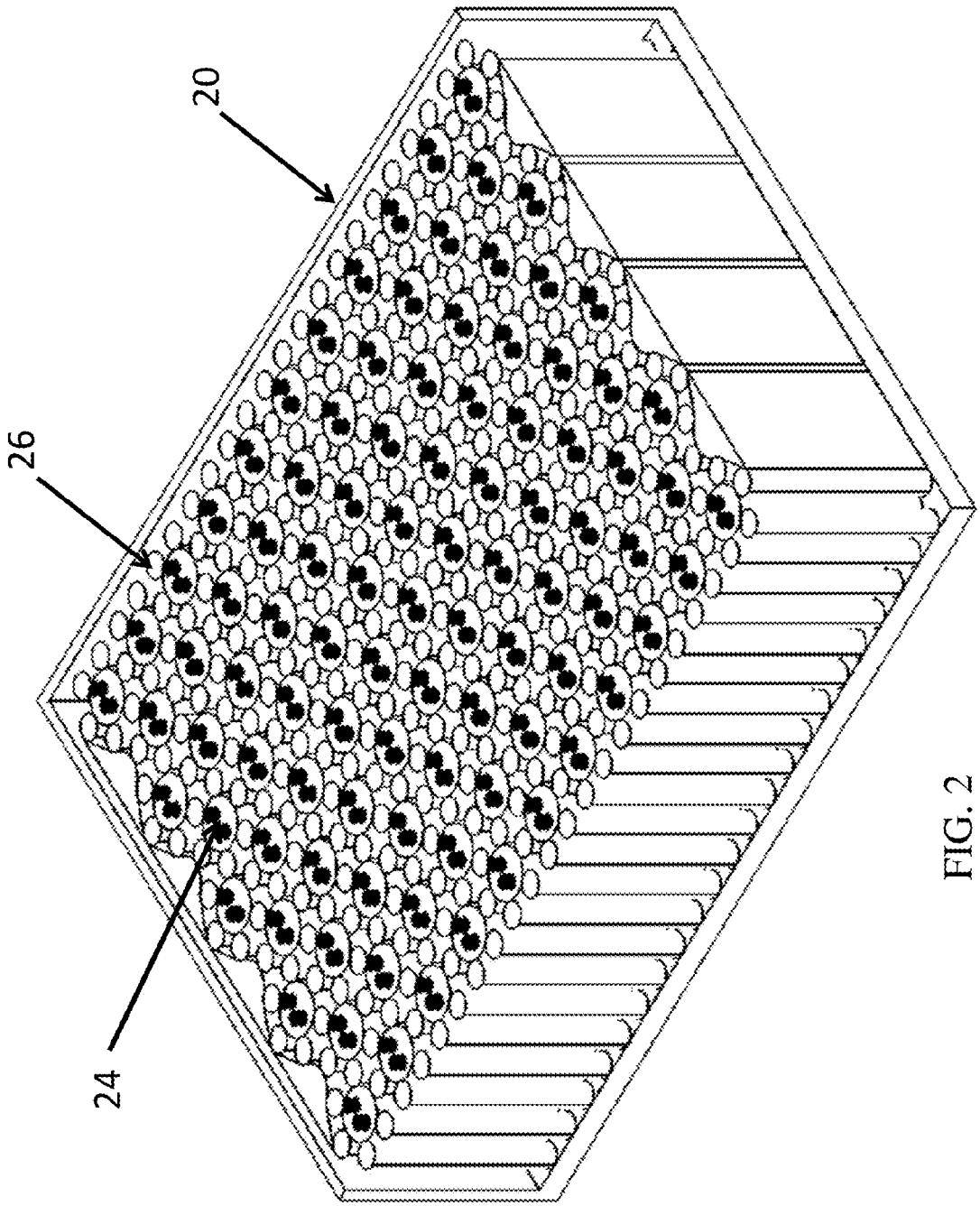

FIG. 2

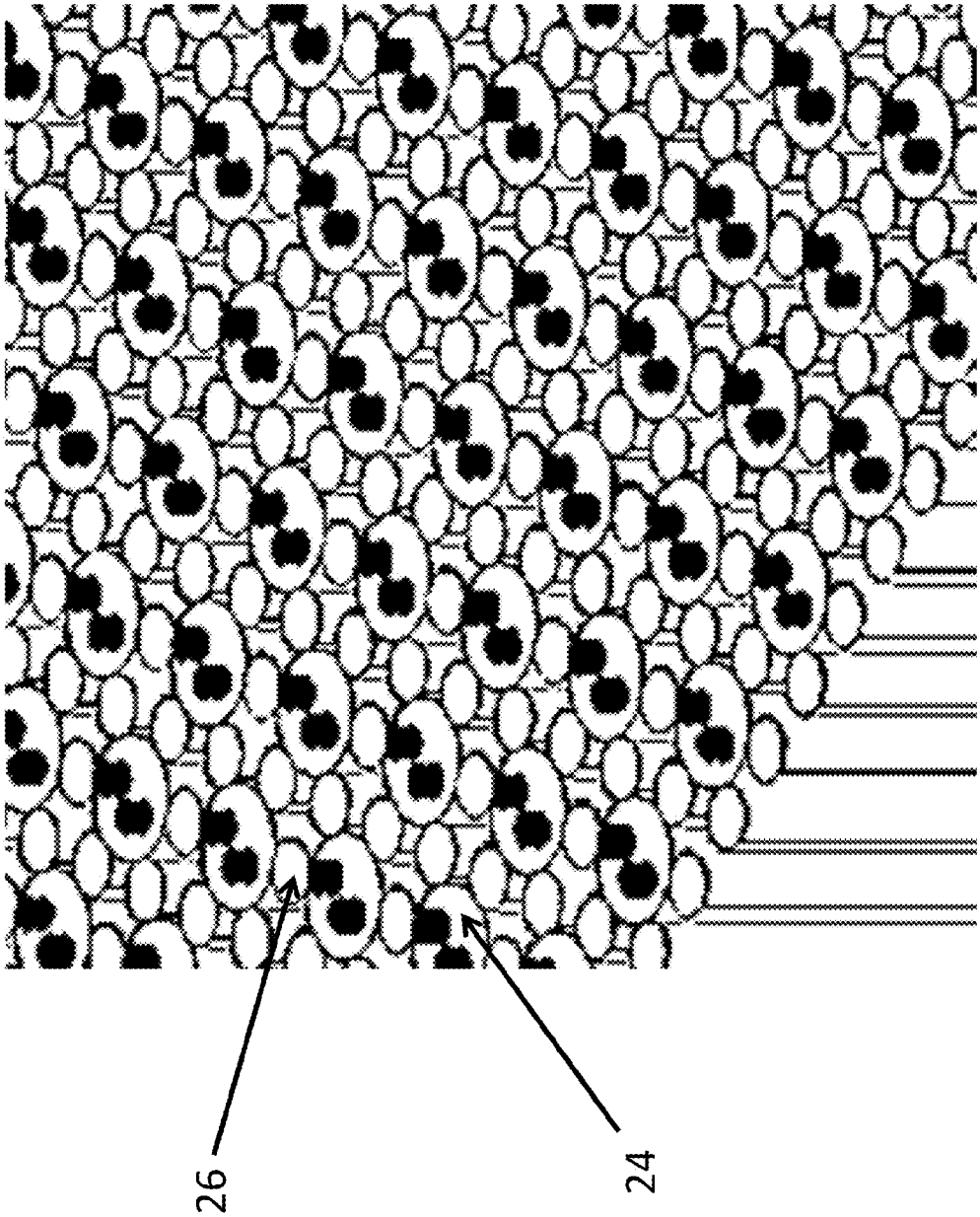

FIG. 3

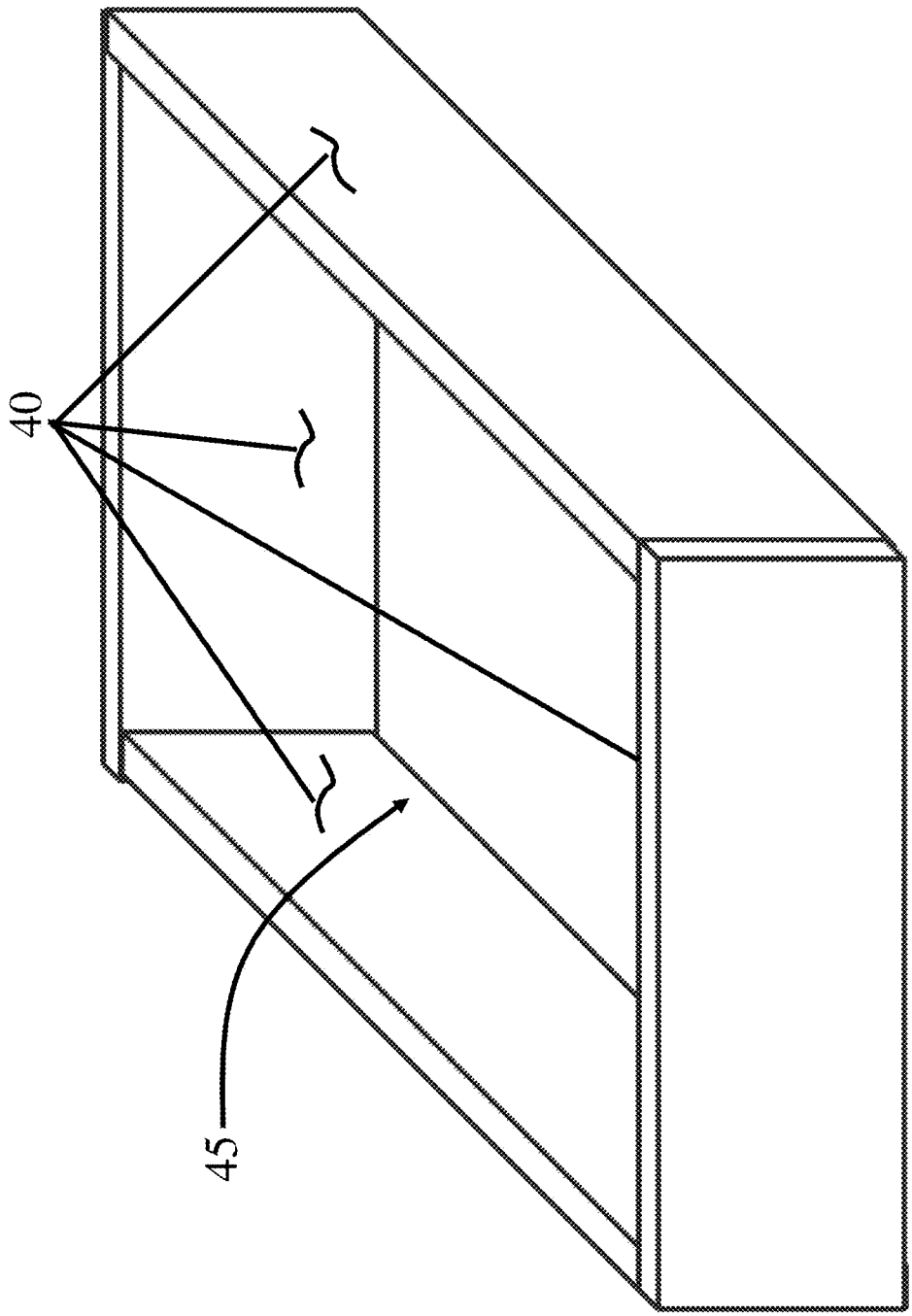

FIG. 4

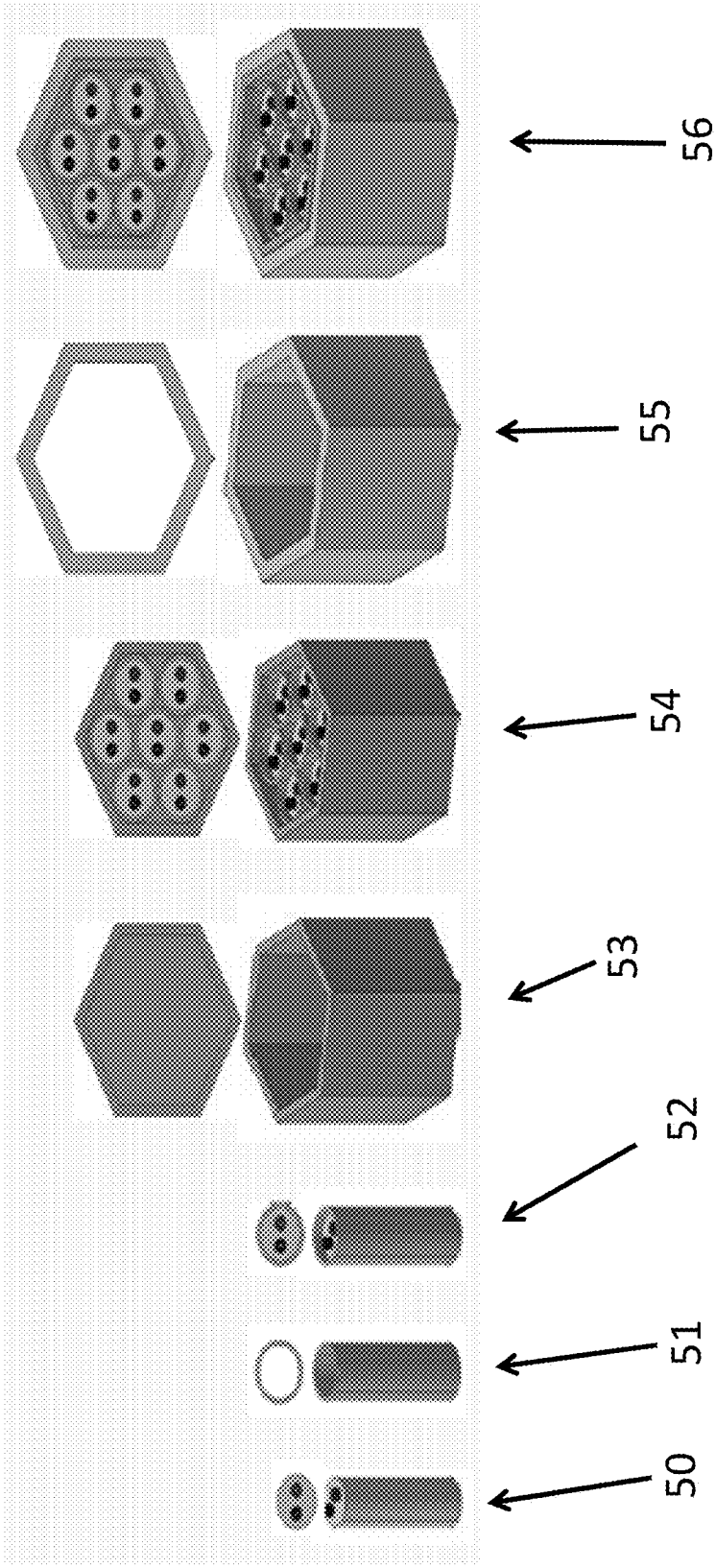

FIG. 5

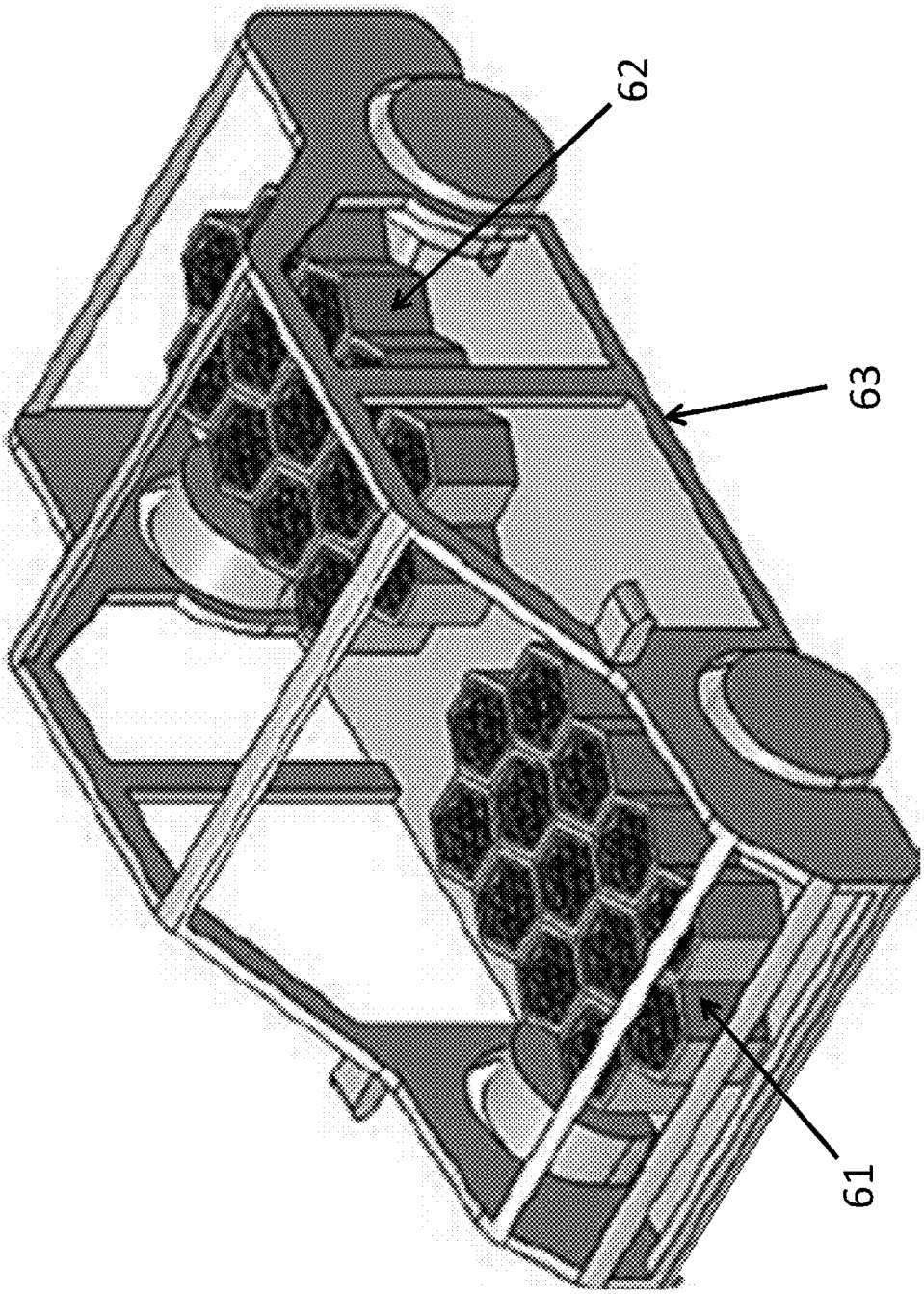

FIG. 6

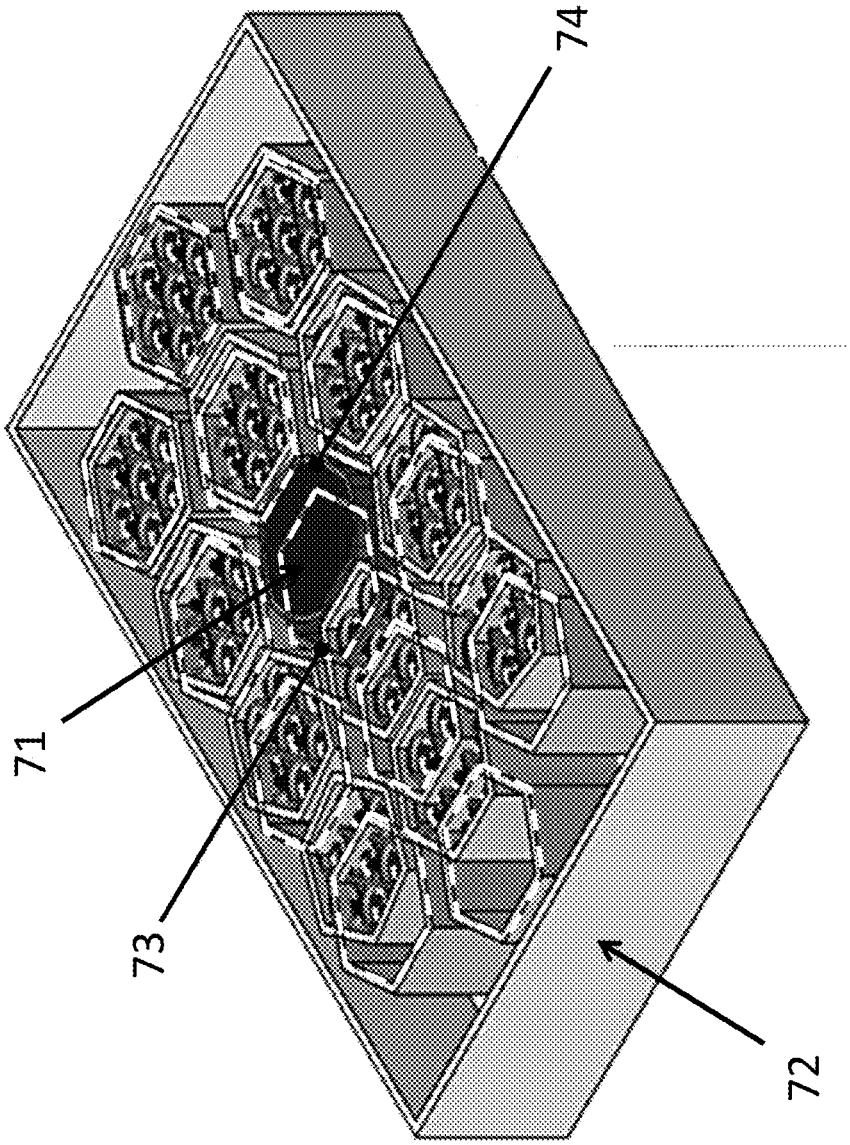

FIG. 7

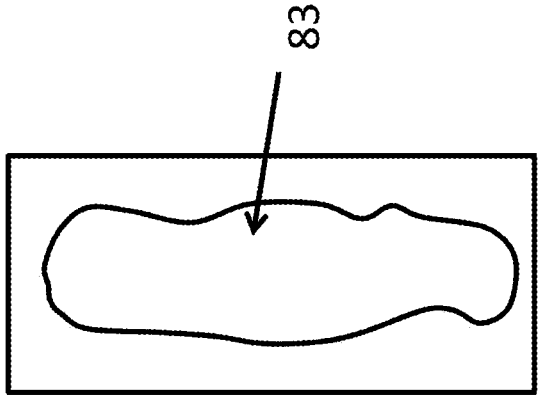

FIG. 8(B)

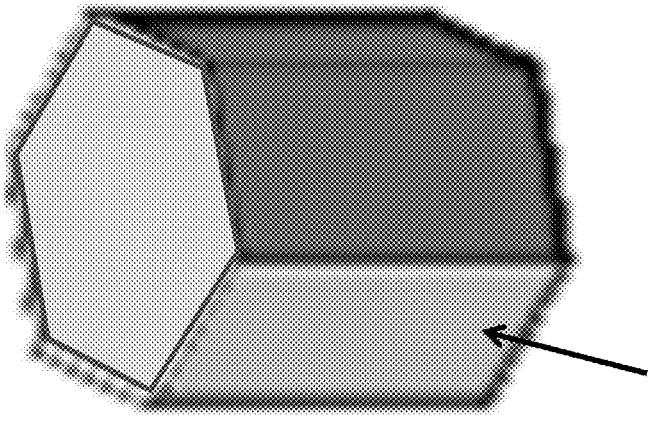

FIG. 8(A)

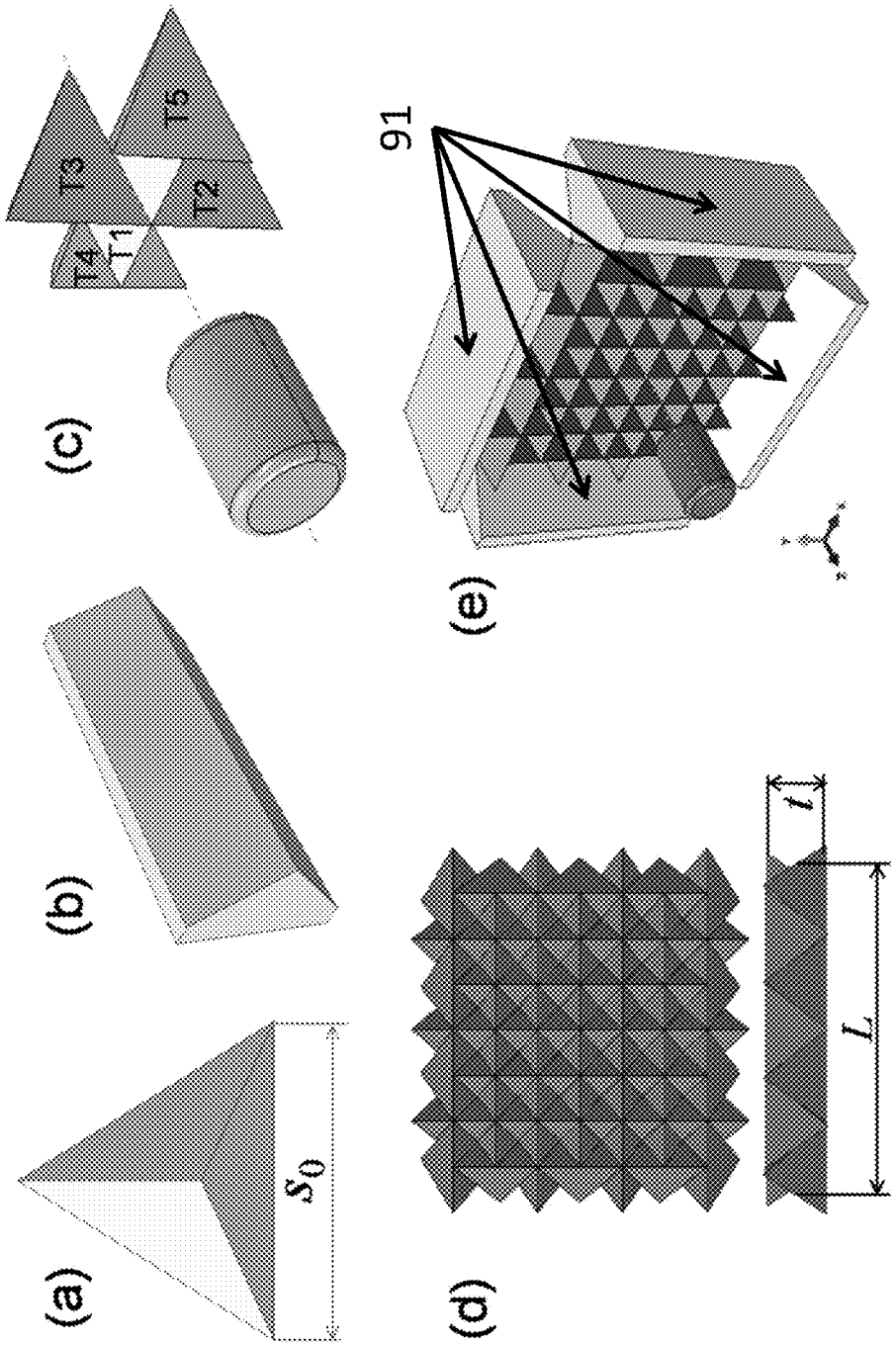

FIGs. 9(a), 9(b), 9(c), 9(d), and 9(e)

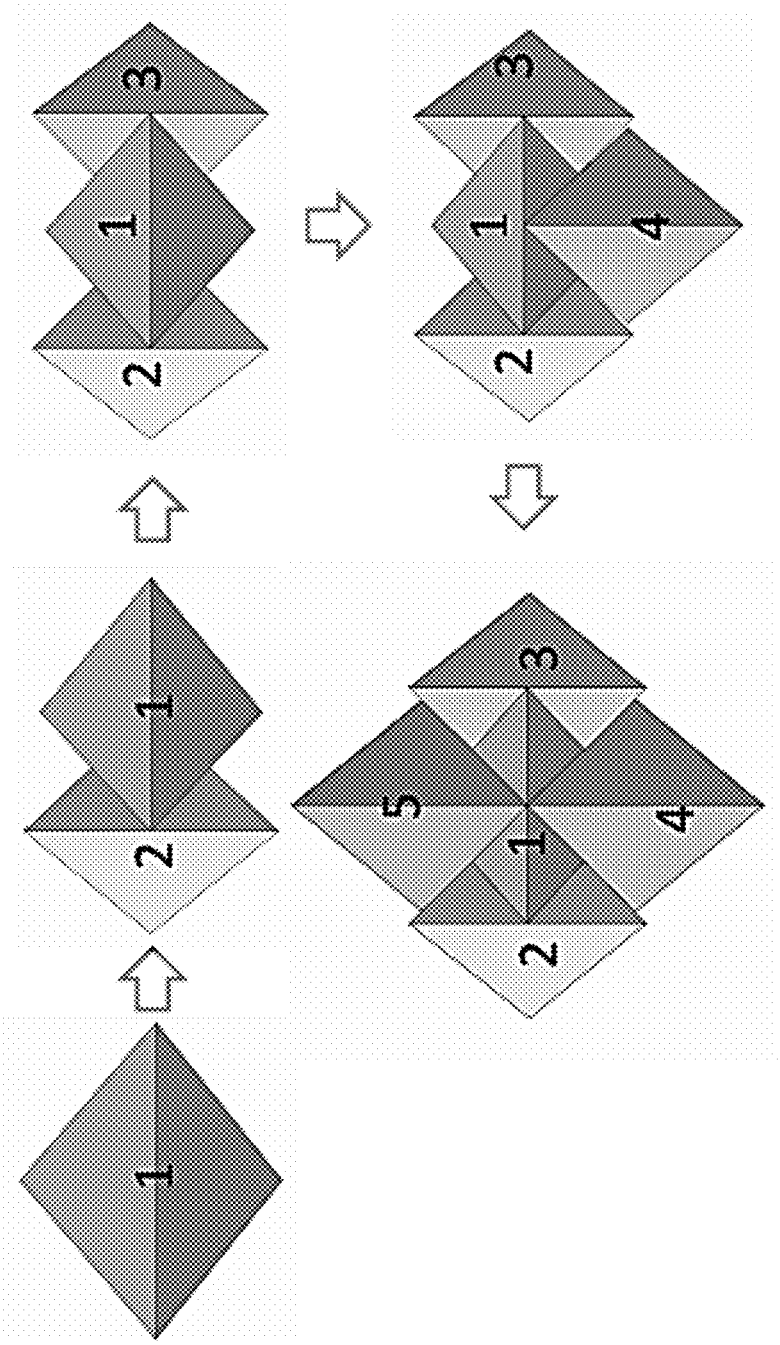

FIG. 10

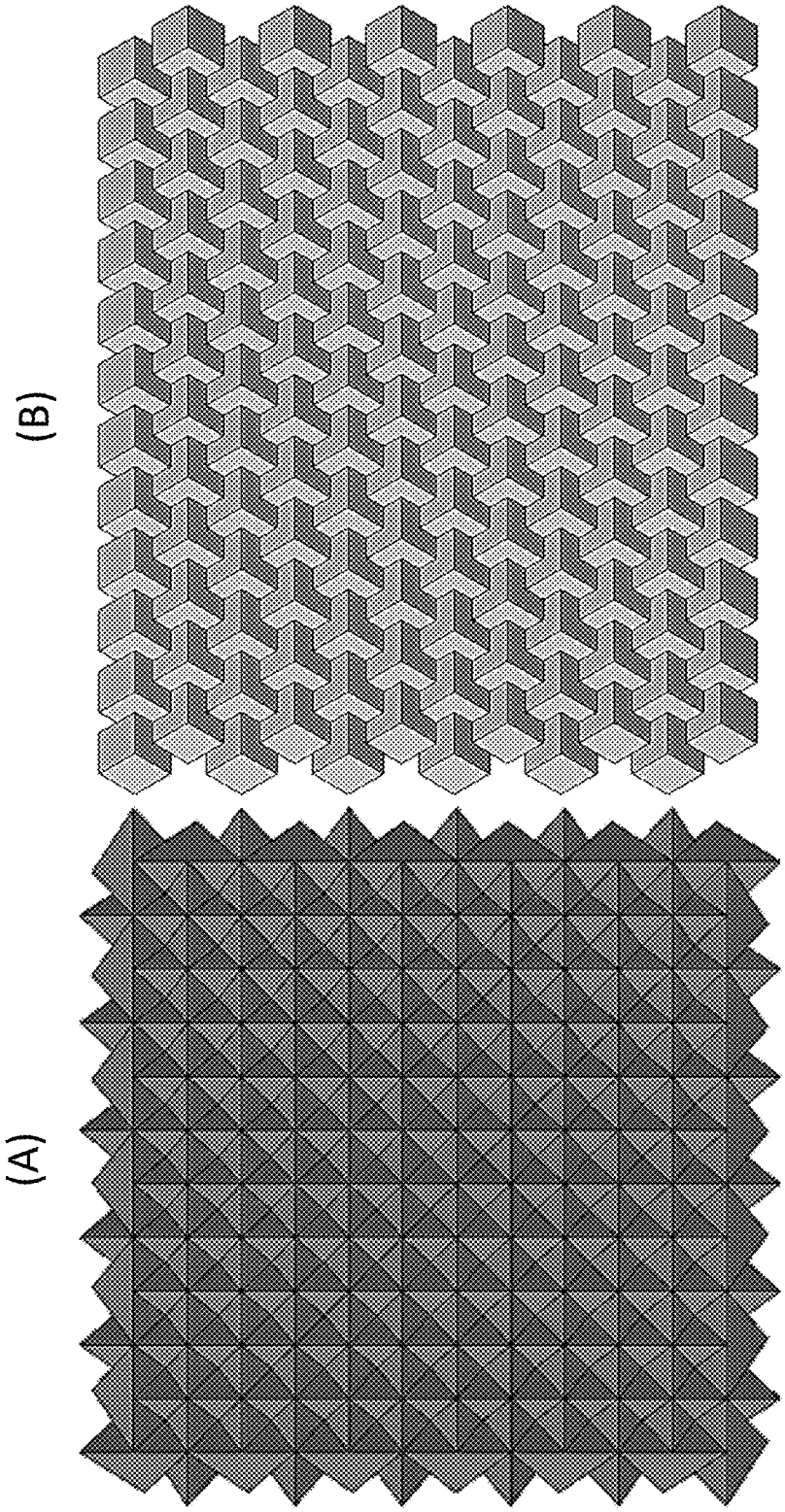

FIGs. 11(A) and 11(B)

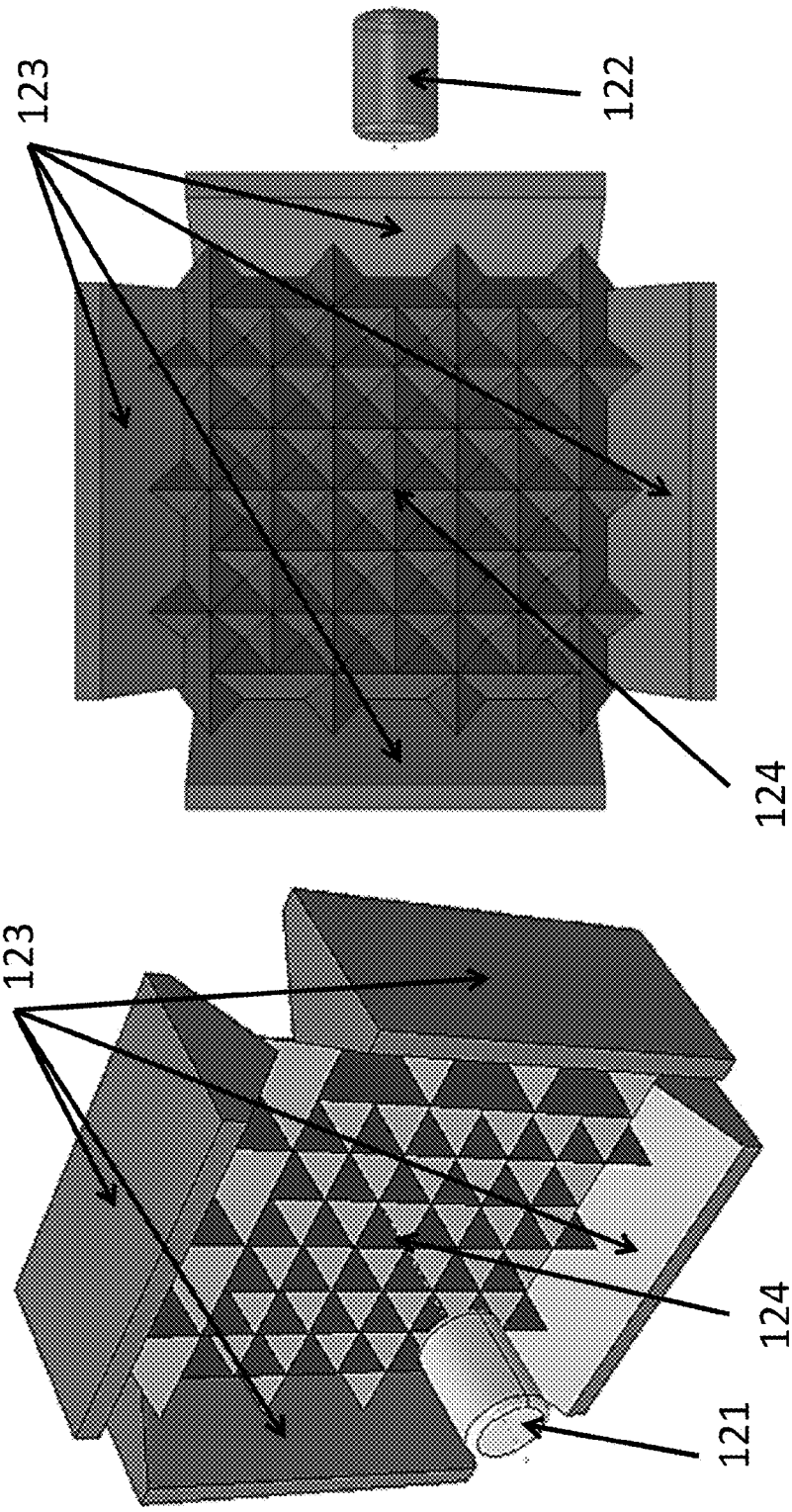

FIGs. 12(A) and 12(B)

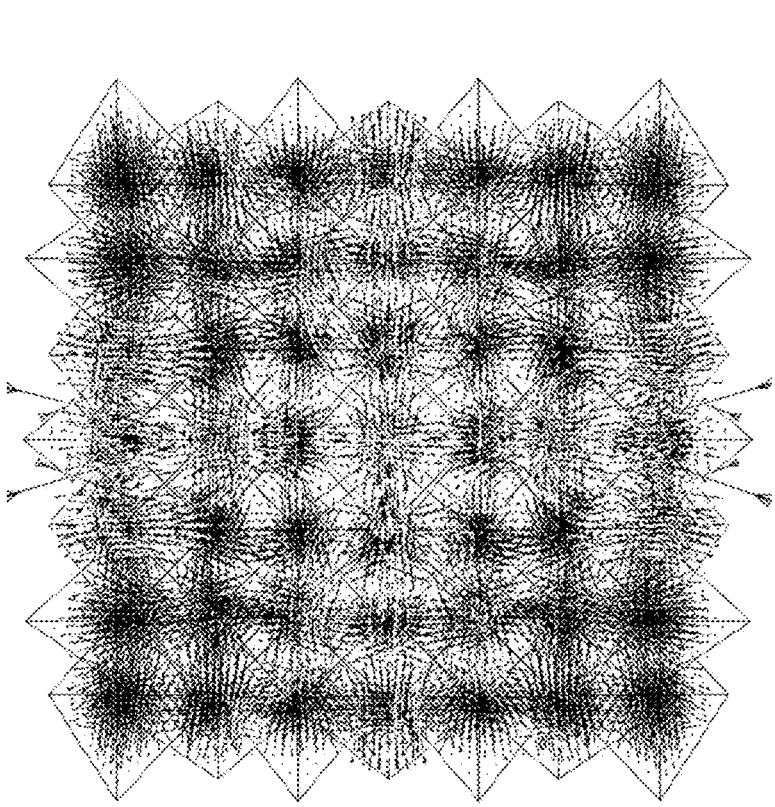

(A)

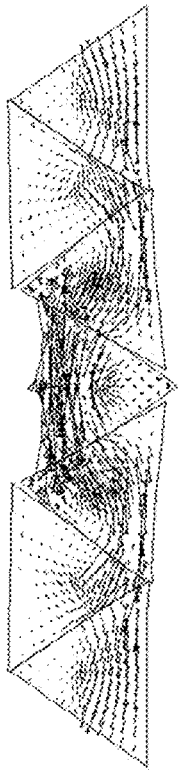

(B)

FIGs. 13(A) and 13(B)

(A)

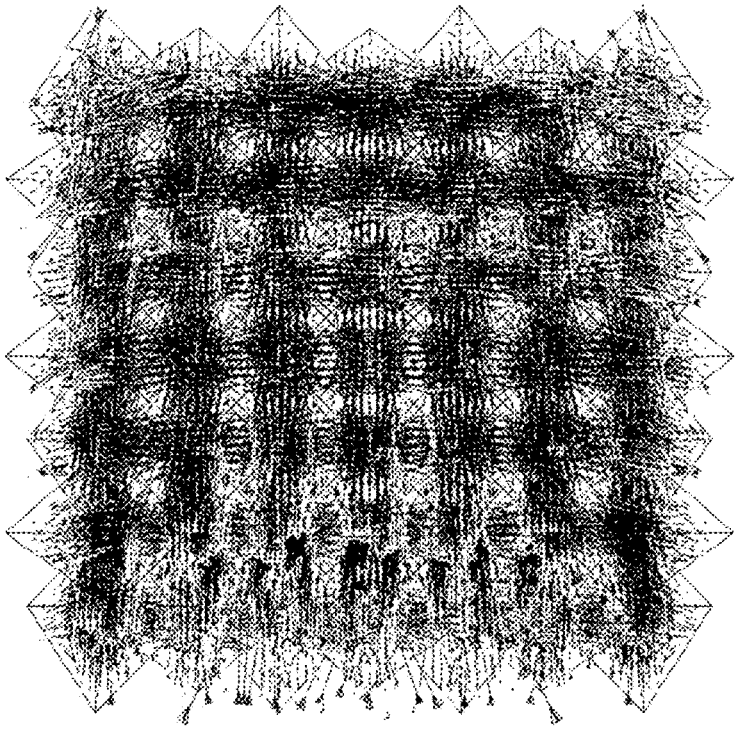

(B)

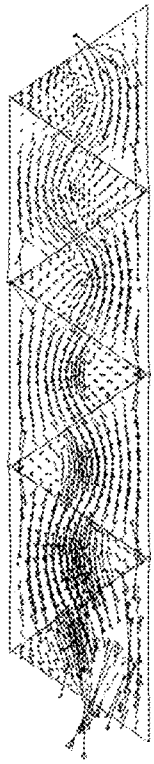

FIGs. 14(A) and 14(B)

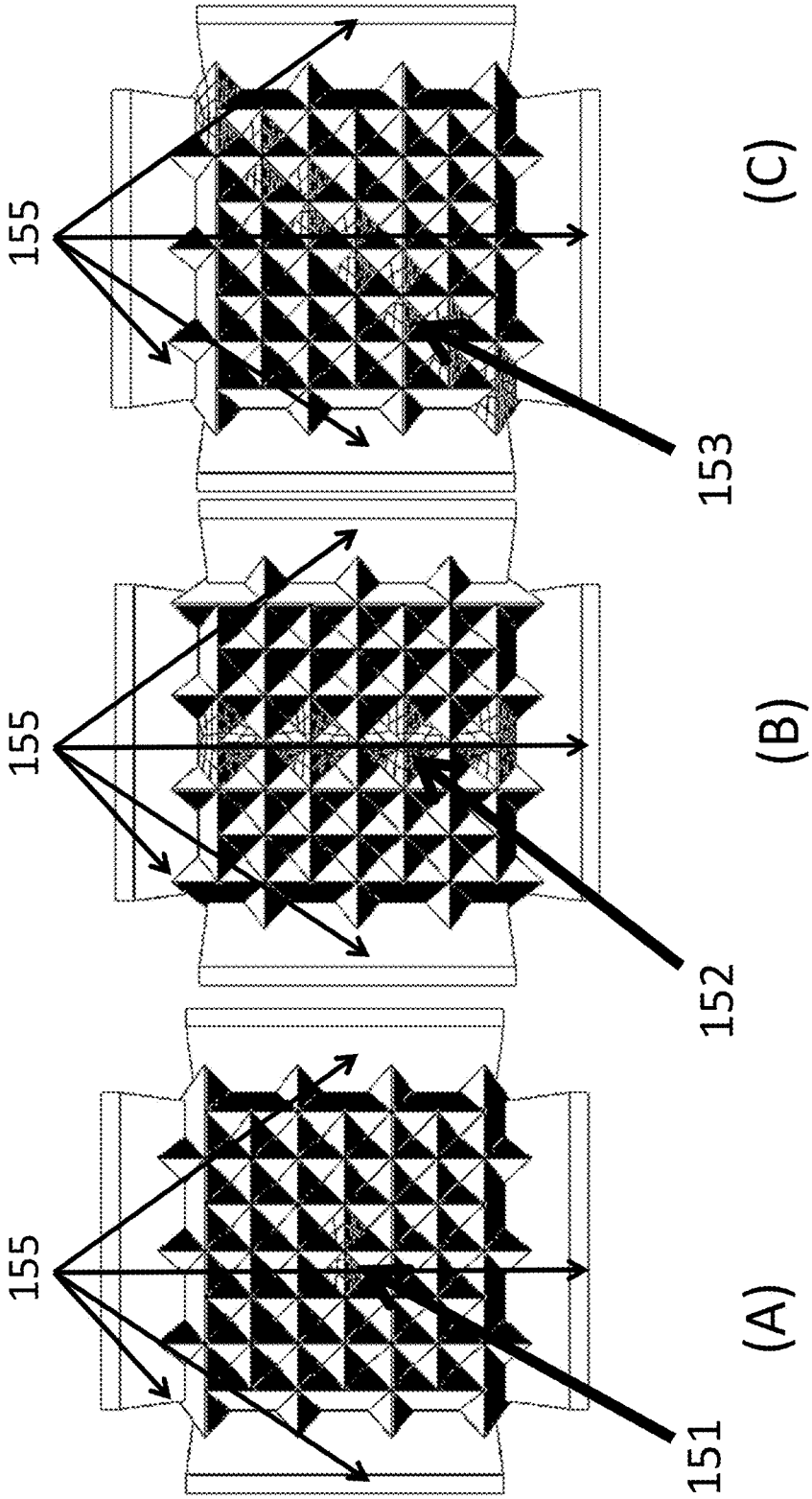

FIGs. 15(A), 15(B), and 15(C)

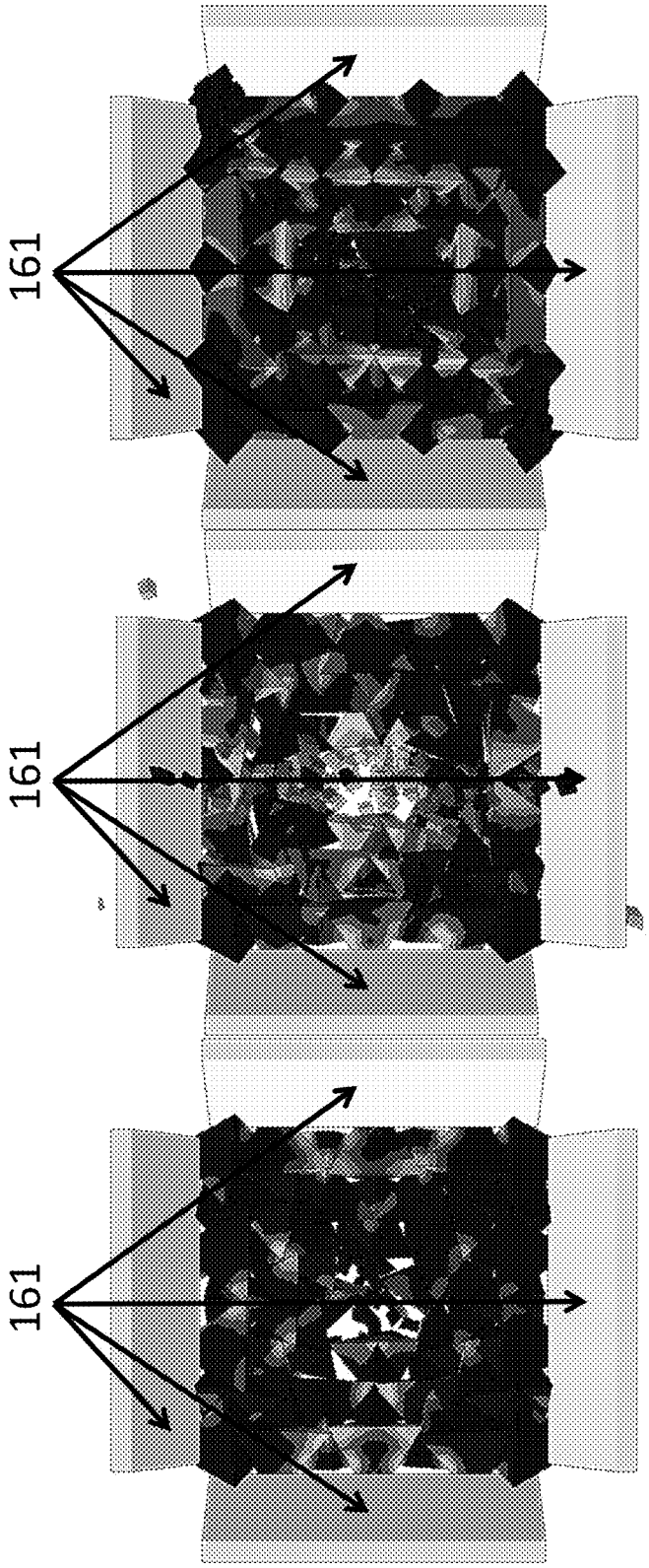

FIGs. 16(A), 16(B), and 16(C)

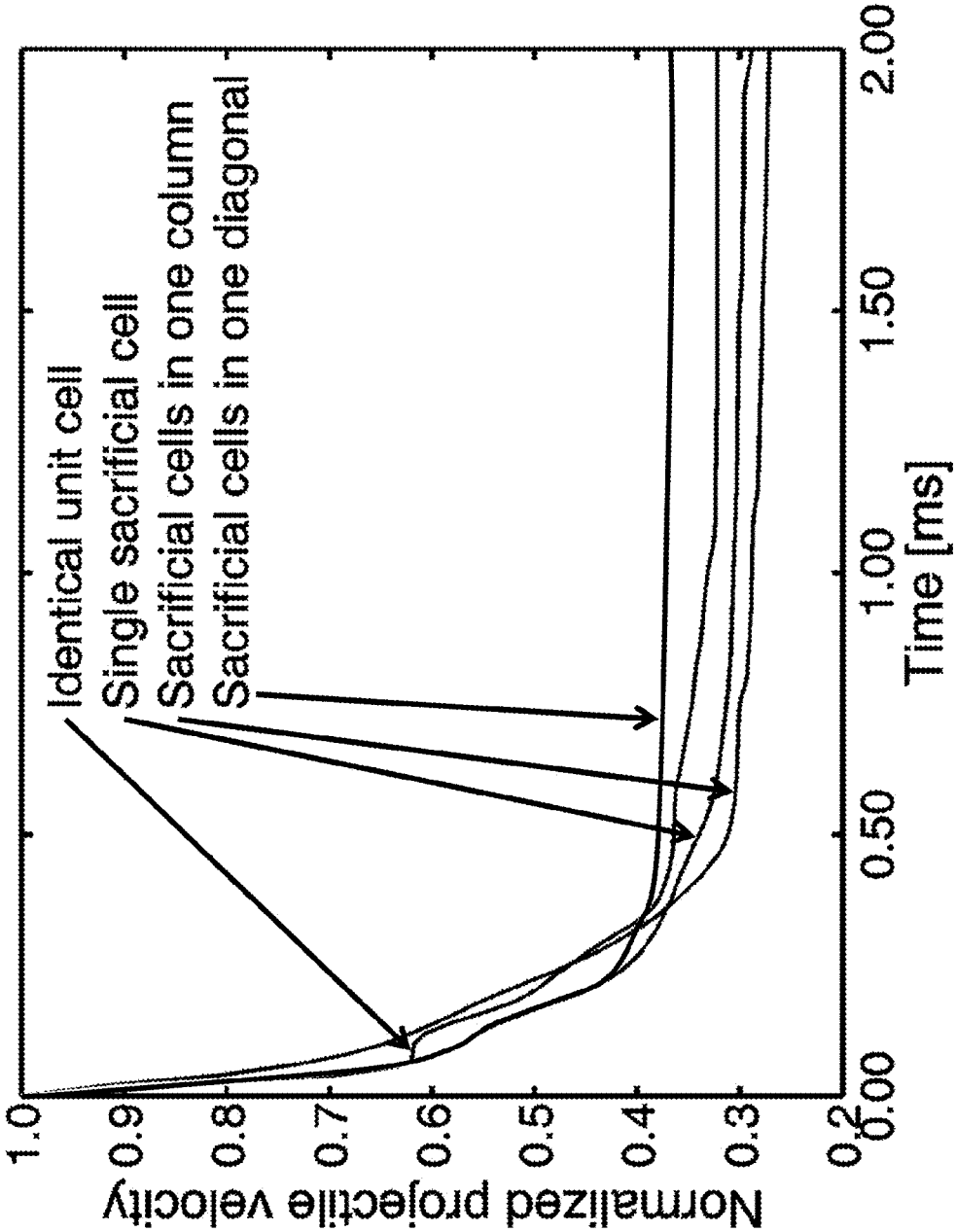
Identical unit cell
Single sacrificial cell
Sacrificial cells in one column
Sacrificial cells in one diagonal
Normalized projectile velocity
1.0
0.9
0.8
0.7
0.6
0.5
0.4
0.3
0.2
0.00
0.50
1.00
1.50
2.00
Time [ms]

FIG. 17

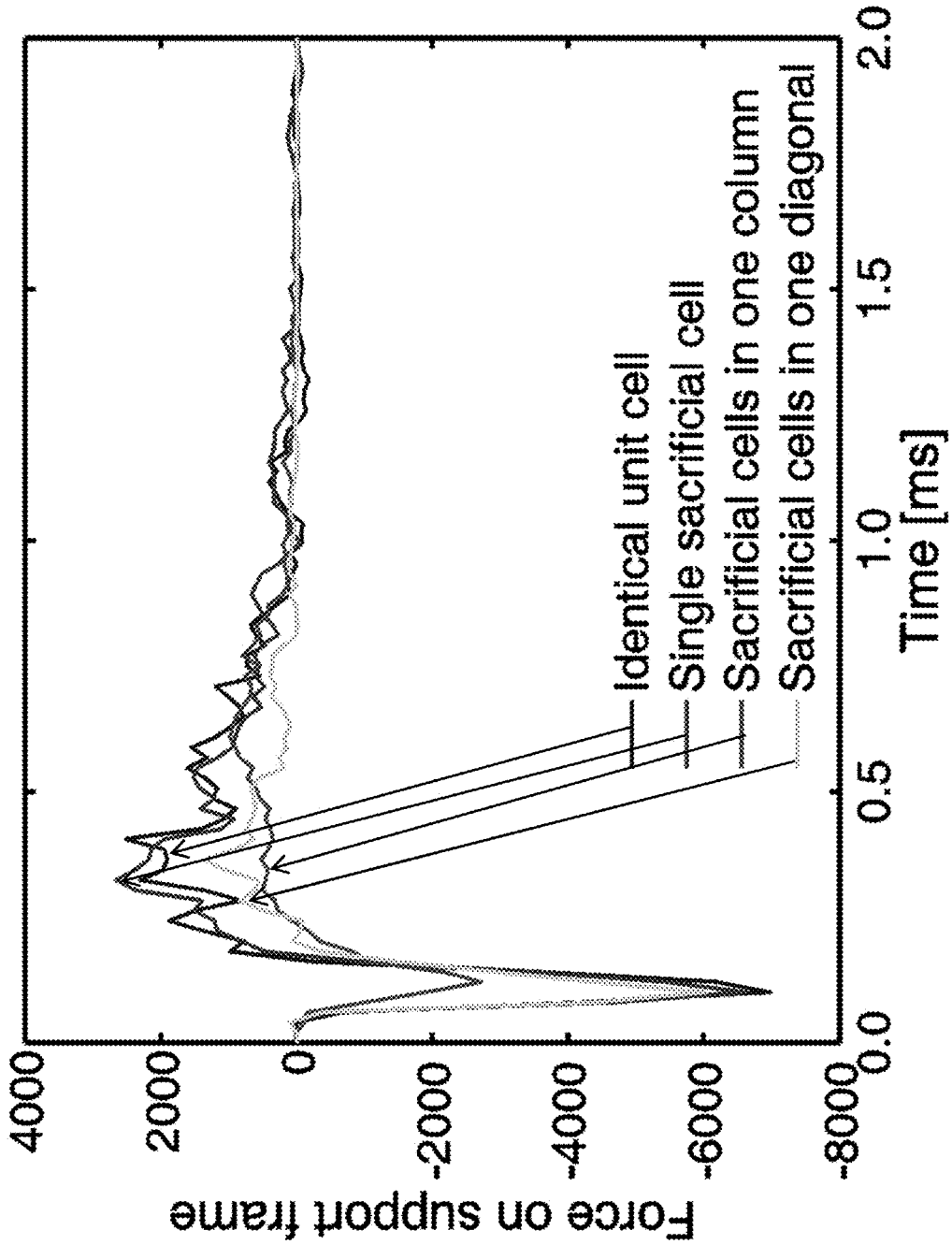
Force on support frame
4000
2000
0
-2000
-4000
-6000
-8000
0.0
0.5
1.0
1.5
2.0
Time [ms]
Identical unit cell
Single sacrificial cell
Sacrificial cells in one column
Sacrificial cells in one diagonal

FIG. 18

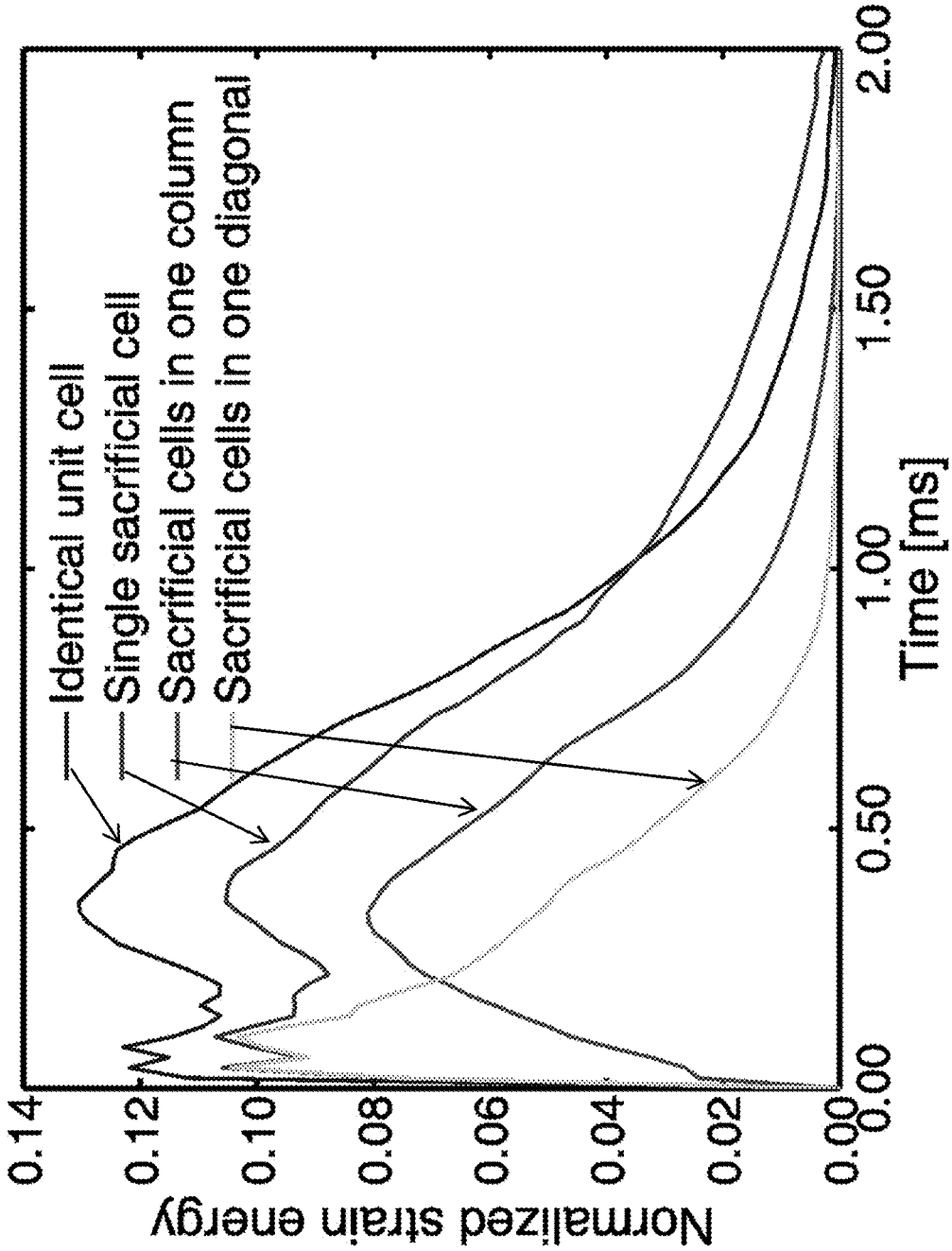
Identical unit cell
Single sacrificial cell
Sacrificial cells in one column
Sacrificial cells in one diagonal
Normalized strain energy
0.14
0.12
0.10
0.08
0.06
0.04
0.02
0.00
0.00
0.50
1.00
1.50
2.00
Time [ms]

FIG. 19

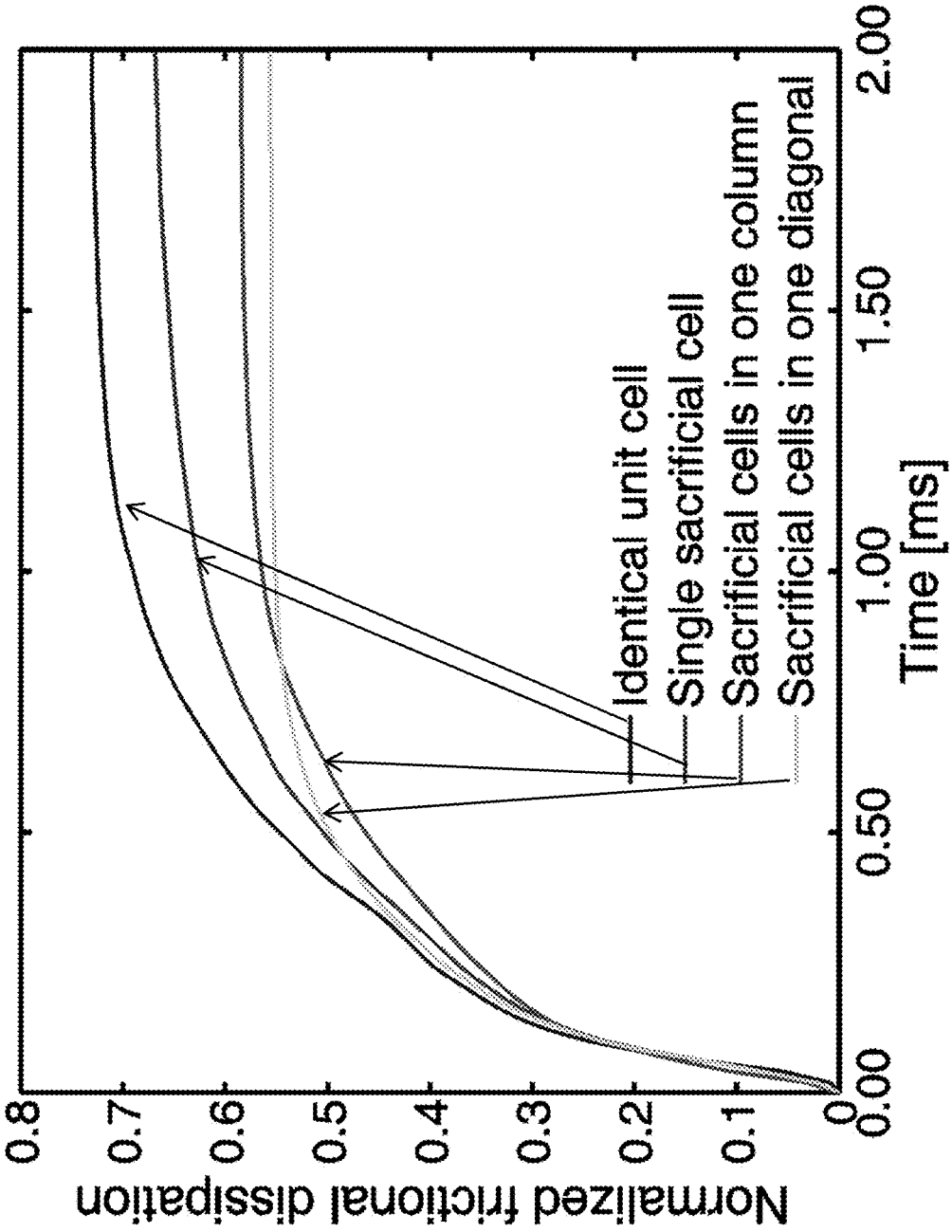
Normalized frictional dissipation
0.8
0.7
0.6
0.5
0.4
0.3
0.2
0.1
0
0.00
0.50
1.00
1.50
2.00
Time [ms]
Identical unit cell
Single sacrificial cell
Sacrificial cells in one column
Sacrificial cells in one diagonal

FIG. 20

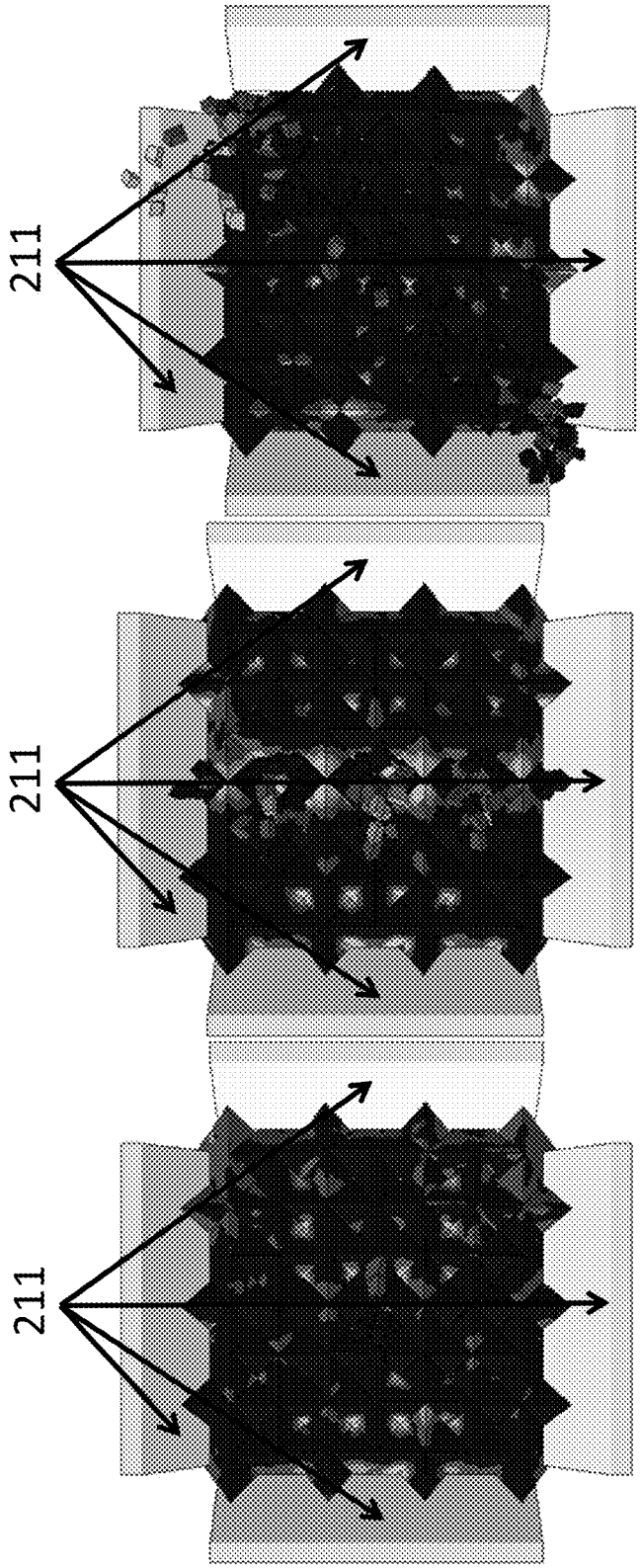

FIGs. 21(a), 21(b), and 21(c)

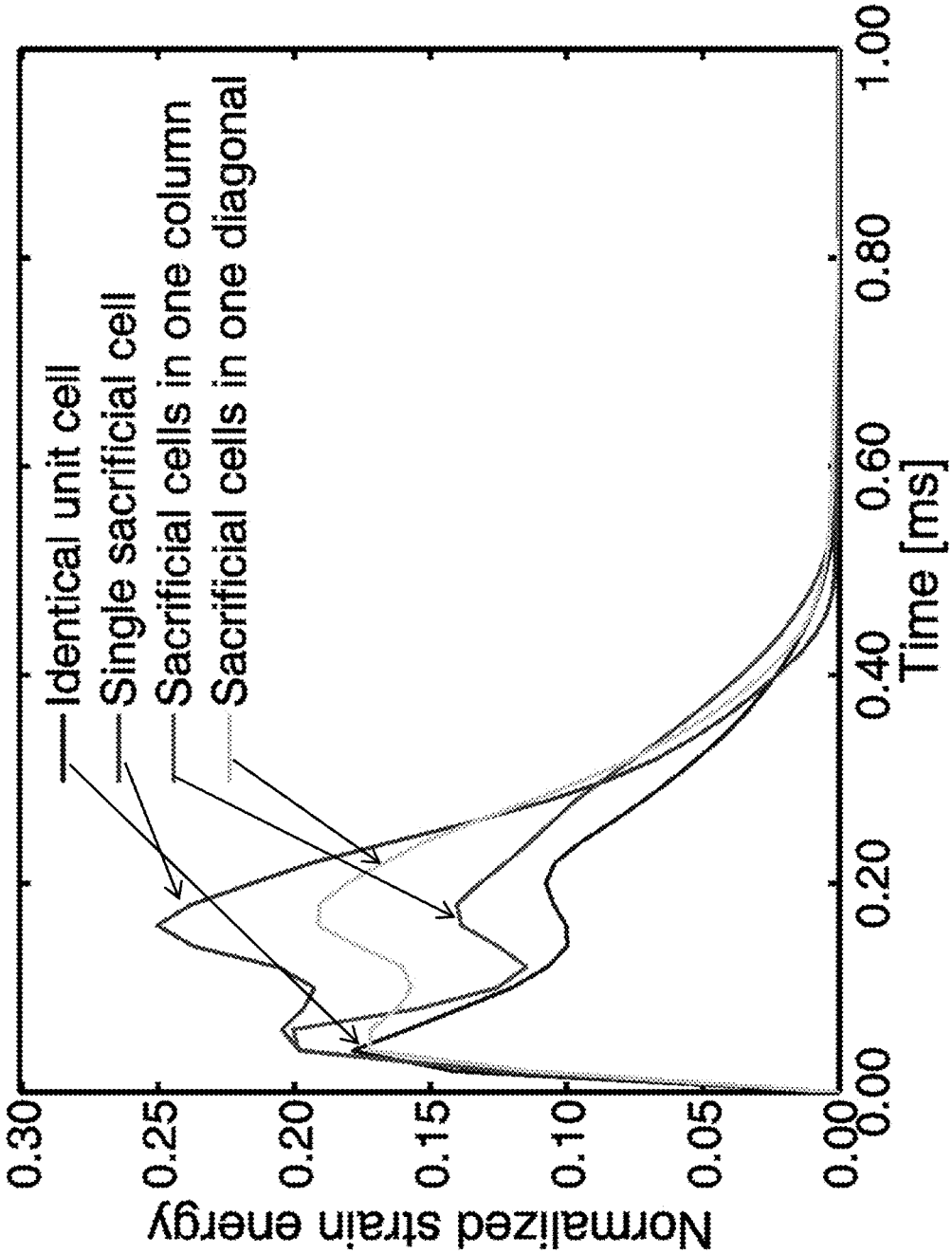
Identical unit cell
Single sacrificial cell
Sacrificial cells in one column
Sacrificial cells in one diagonal
Normalized strain energy
0.30
0.25
0.20
0.15
0.10
0.05
0.00
0.00
0.20
0.40
0.60
0.80
1.00
Time [ms]

FIG. 22

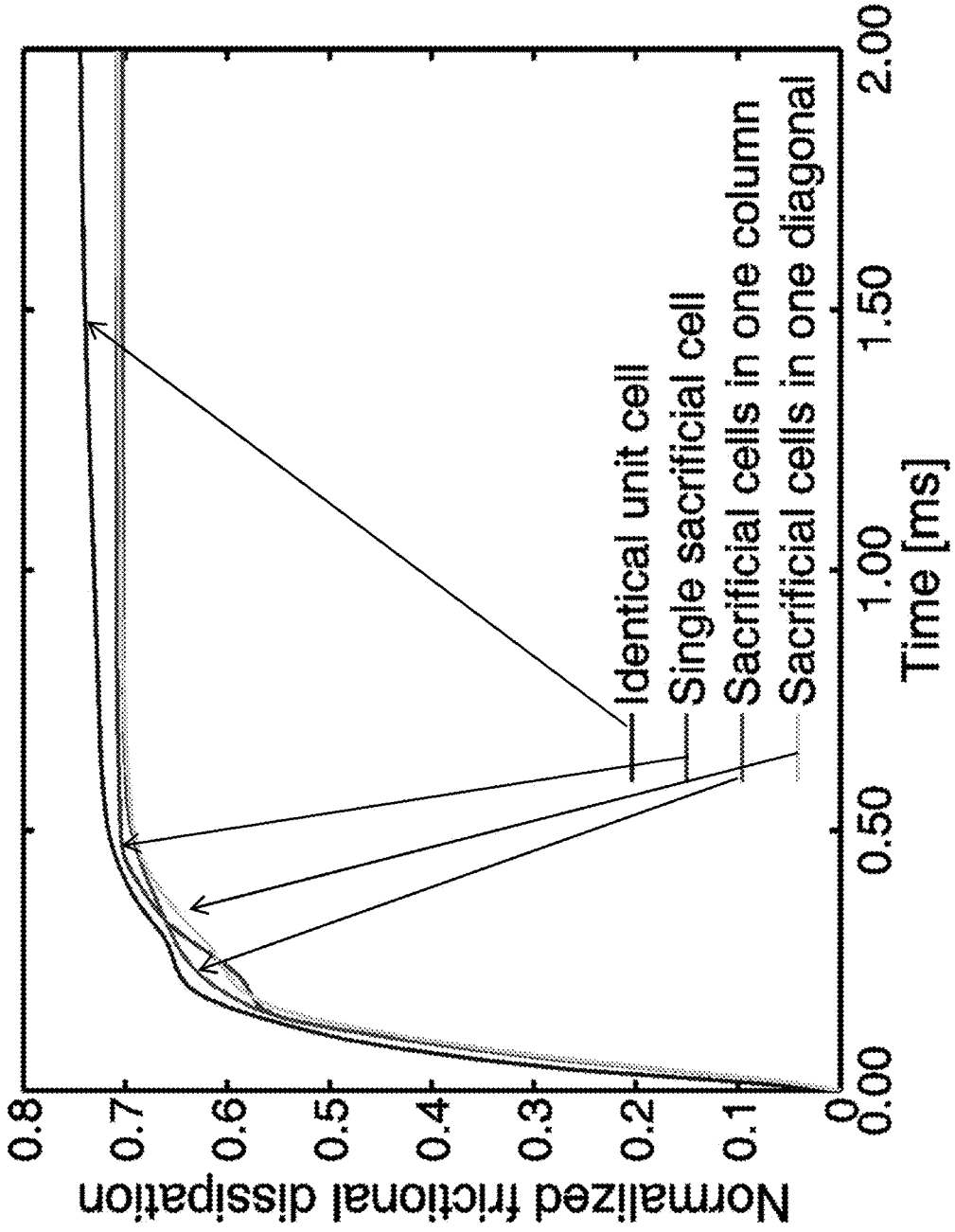
Normalized frictional dissipation
0.8
0.7
0.6
0.5
0.4
0.3
0.2
0.1
0
0.00
0.50
1.00
1.50
2.00
Time [ms]
Identical unit cell
Single sacrificial cell
Sacrificial cells in one column
Sacrificial cells in one diagonal

FIG. 23

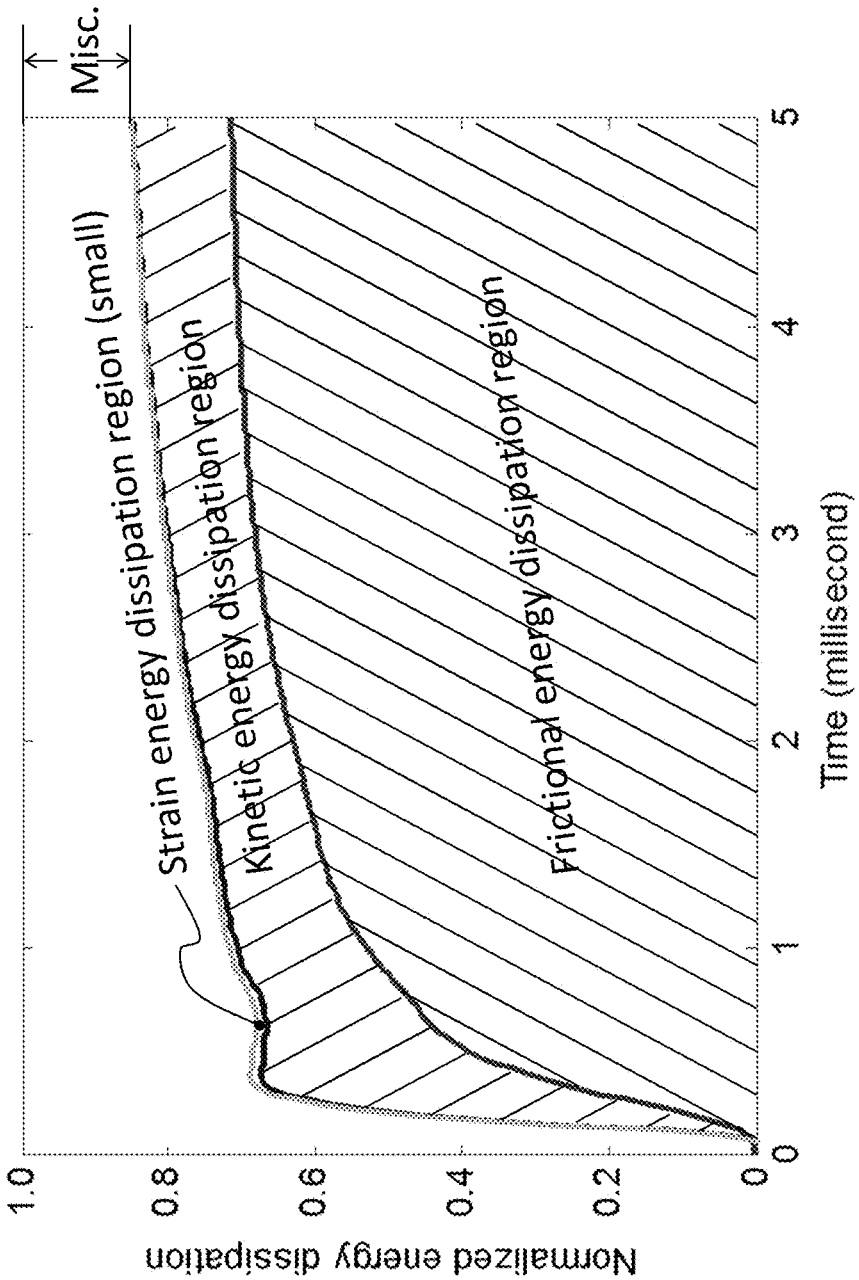
Misc.
Strain energy dissipation region (small)
Kinetic energy dissipation region
Frictional energy dissipation region
Normalized energy dissipation
1.0
0.8
0.6
0.4
0.2
0
0
1
2
3
4
5
Time (millisecond)

FIG. 24

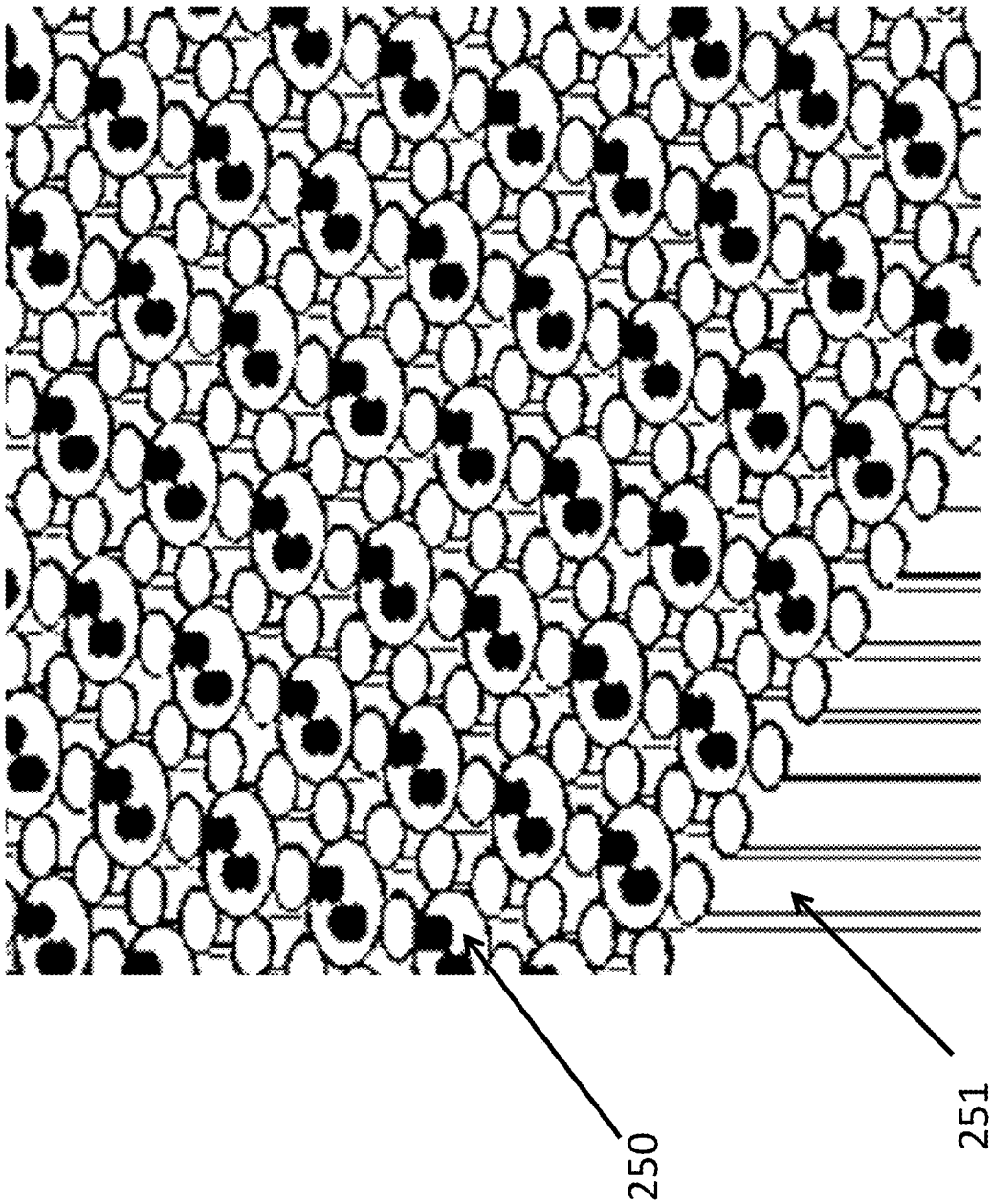

FIG. 25

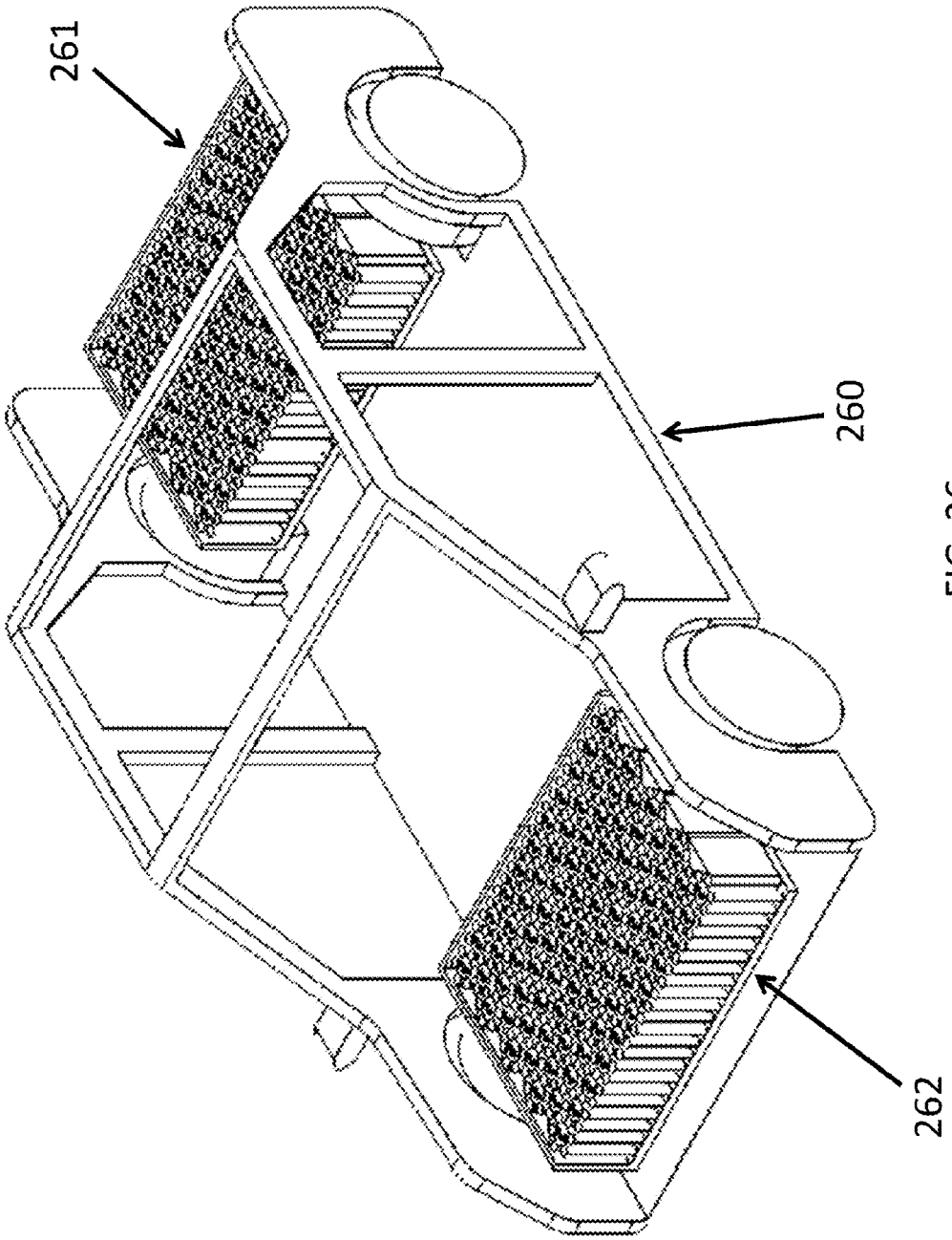

FIG. 26

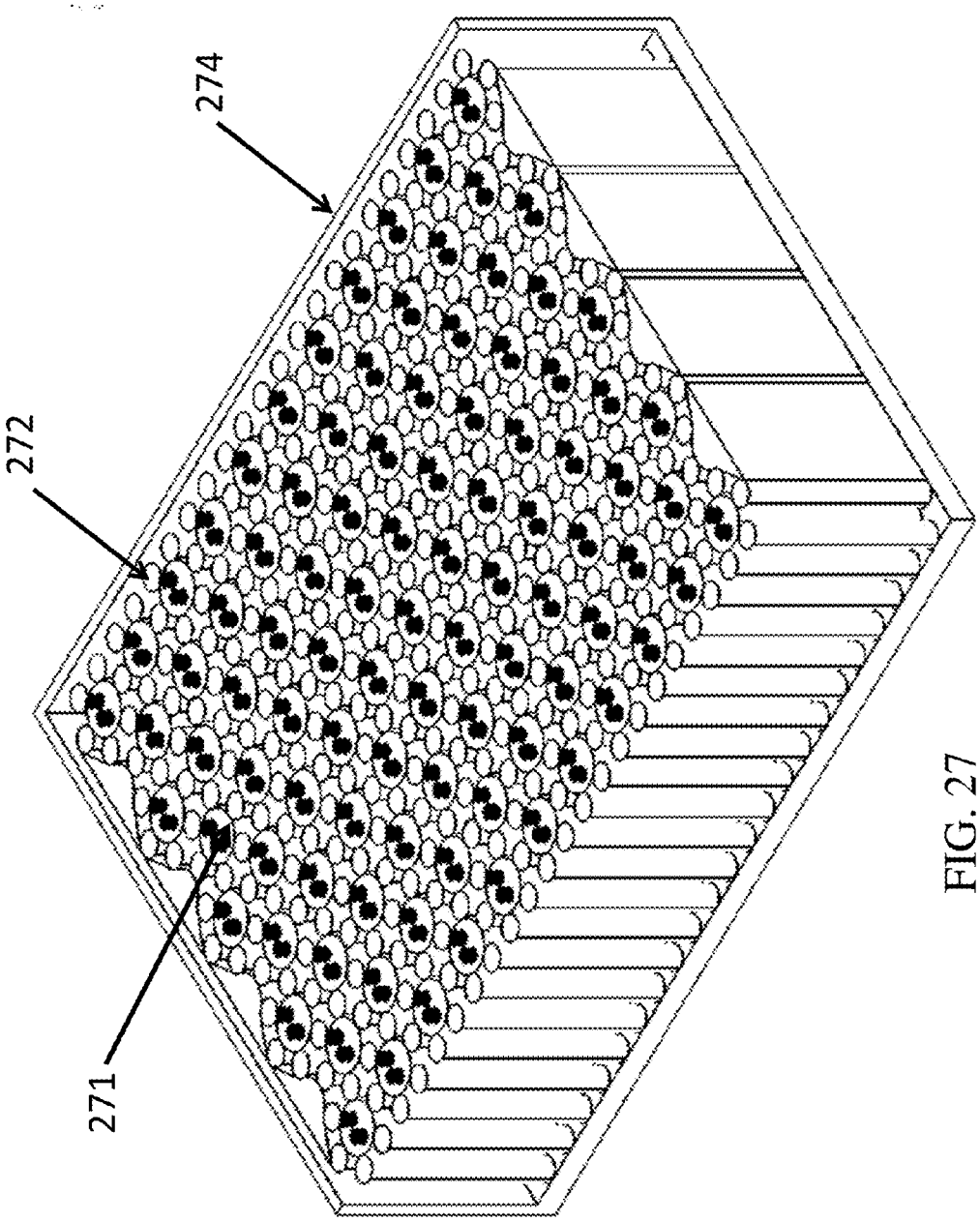

FIG. 27

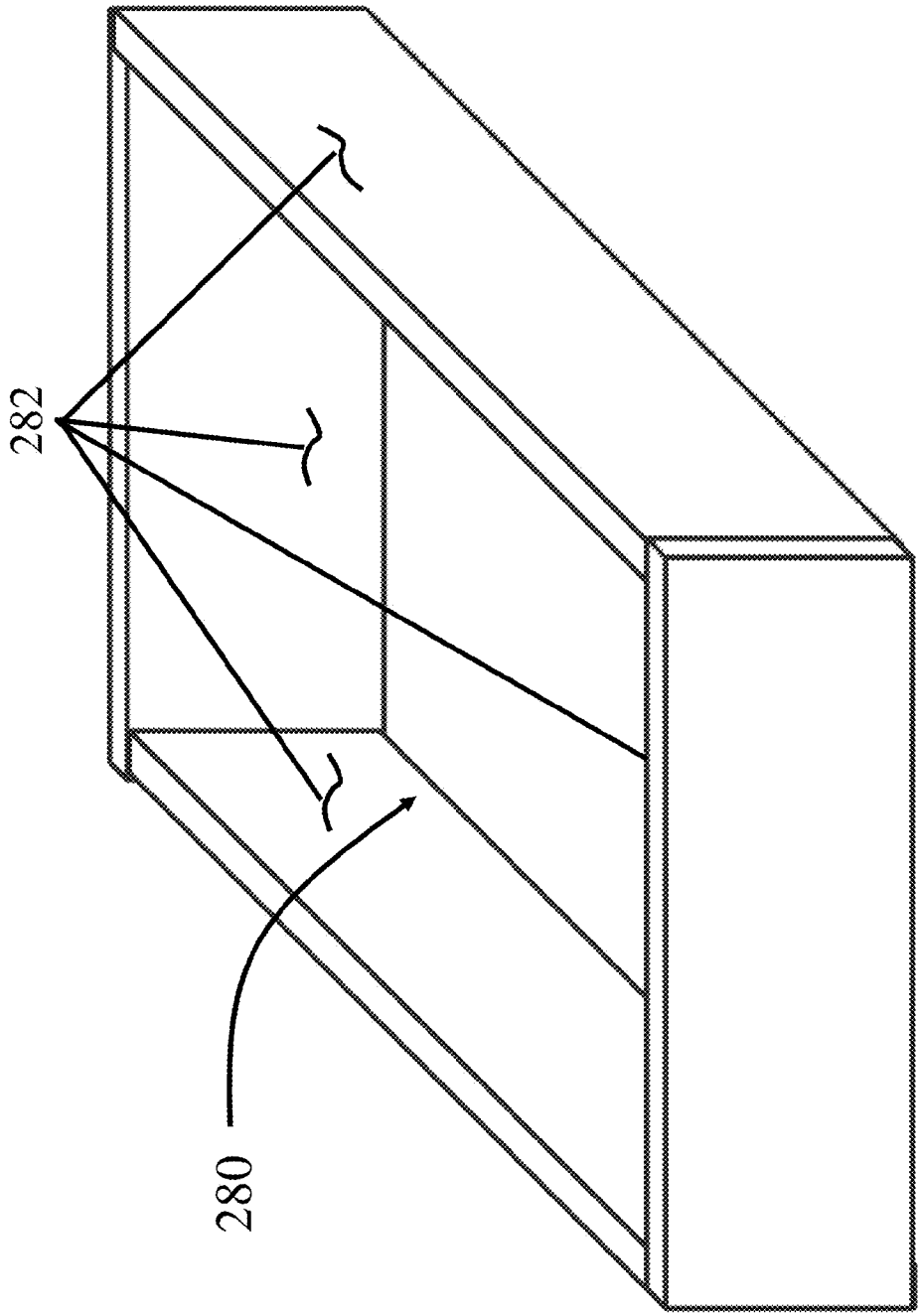

FIG. 28

IMPACT RESISTANT BATTERY ENCLOSURE SYSTEMS

CROSS-REFERENCE TO RELATED APPLICATIONS

[0001] The present U.S. patent application is a divisional application of co-pending U.S. patent application Ser. No. 14/551,670 filed Nov. 24, 2014, which claims the priority benefit of U.S. Provisional Patent Application Ser. No. 61/908,685, filed Nov. 25, 2013 and Provisional Patent Application Ser. No. 61/908,682, filed Nov. 25, 2013. The contents of these prior applications are hereby incorporated by reference in their entirety into the present disclosure.

STATEMENT REGARDING GOVERNMENT FUNDING

[0002] This invention was made with government support under DE-AR 0000378 awarded by the Department of Energy. The government has certain rights in the invention.

TECHNICAL FIELD

[0003] The present disclosure generally relates to impact absorbing arrangements and in particular to impact absorbing arrangement for batteries.

BACKGROUND

[0004] This section introduces aspects that may help facilitate a better understanding of the disclosure. Accordingly, these statements are to be read in this light and are not to be understood as admissions about what is or is not prior art.

[0005] In response to shortage of low cost fossil fuel, the automobile industry in the last decades has produced a large number of gasoline/electrical hybrid and fully electric vehicles. In either of these categories, a large battery pack is used to provide power to propel a vehicle. The range of a vehicle running on such a battery pack depends on the capacity of the battery. Vehicles with larger battery packs are becoming more prevalent. However, these battery packs present challenges.

[0006] One such challenge is crashworthiness. A battery pack typically includes a plurality of cells. Nowadays lithium-ion battery technology is the technology of choice, while just as recent as a few years ago nickel metal hydride was most prevalent. While lithium ion battery packs provide a larger energy density, lithium ion packs are known to be unstable when subject to large impact forces. As a result, much effort has been placed in developing enclosures that protect the cells in the event of a collision. Exemplary enclosures of the prior art can be found in U.S. Pub. Pat. App. 20120160088.

[0007] However, many of the enclosures that have been developed are bulky and add a considerable amount of weight to the vehicle, thereby negatively affecting the vehicle's range operating on the battery pack. Furthermore, while the enclosures may be effective to provide protection for the battery pack in one direction in the event of a collision, they may not be as effective in other directions. Furthermore, current designs aim at protecting the battery pack during a vehicular crash. While a heavy battery pack may be protected, the occupants inside the vehicle may be subjected to more severe acceleration during a crash as a result of the conventional battery pack design. It should be emphasized that the main focus of protection is of the occupant(s) inside the vehicle. With the improvements in safety of battery cells, a proper arrangement of the heavy battery pack will enhance the personnel safety while the multifunctional use of batteries will reduce the overall weight of the vehicle.

[0008] Therefore, new enclosure arrangements are needed that can protect a battery pack comprising of a plurality of cells in multiple directions in the event of a collision resulting in impact forces on the battery cells and which can improve safety of the vehicle passengers utilizing the battery pack.

SUMMARY

[0009] An enclosure arrangement system for a vehicular battery system is disclosed. The enclosure arrangement system includes at least one enclosure arrangement module. Each enclosure arrangement module includes a group of battery cells surrounded by a group of kinetic energy absorbing elements. Each of the kinetic energy absorbing elements is in contact with at least one of the battery cells. The enclosure further contains a frame configured to encase the group of kinetic energy absorbing elements and the group of battery cells.

[0010] A high-shear battery enclosure arrangement system for a vehicular battery system is also disclosed. The high-shear battery enclosure system includes at least one high-shear enclosure arrangement module. Each high-shear enclosure arrangement module contains a high-shear shell which encases a rigid protective shell. The rigid protective shell contains a group of electrically insulated cases, wherein each insulated case includes a battery cell.

[0011] A topologically interlocked battery enclosure system for a vehicular battery system is disclosed. The topologically interlocked battery enclosure system contains at least one topologically interlocked battery enclosure module. The topologically interlocked battery enclosure module contains a group of battery cells and a group of kinetic energy absorbing elements. Each of the kinetic energy absorbing elements is in contact with at least one of the battery cells. The system further contains a frame made of a topologically interlocked material configured to encase the group of the kinetic energy absorbing elements and the battery cells.

BRIEF DESCRIPTION OF DRAWINGS

[0012] While some of the figures shown herein may have been generated from scaled drawings or from photographs that are scalable, it is understood that such relative scaling within a figure are by way of example, and are not to be construed as limiting.

[0013] FIG. **1** is a schematic representation of a vehicle with battery enclosure arrangement modules according to the present disclosure.

[0014] FIG. **2** is a representation one embodiment of the Granular Battery Assembly (GBA) in a vehicle.

[0015] FIG. **3** is an expanded view of the battery cells and deformation units of an embodiment of GBA.

[0016] FIG. **4** is an embodiment of GBA according to the present disclosure.

[0017] FIG. **5** is a depiction of various elements of a high-shear battery enclosure module.

[0018] FIG. **6** is a depiction of a plurality of high-shear battery enclosure modules positioned next to each other.

[0019] FIG. **7** is a depiction of the movement of the high-shear modules and rupture modules.

[0020] FIGS. **8**(A)-**8**(B) are schematics of an embodiment of the rupture module.

[0021] FIGS. **9**(*a*)-**9**(*e*) is a depiction of elements of the model system under consideration for TIMs.

[0022] FIG. **10** is a depiction of assembly of the tetrahedral units, according to one embodiment of this disclosure.

[0023] FIGS. **11**(A) and **11**(B) are two TIBA assemblies utilizing tetrahedral structures and cube structures, respectively.

[0024] FIGS. **12**(A) and **12**(B) are a depiction of two types of impact.

[0025] FIGS. **13**(A) and **13**(B) are deflection patterns (top view and cross sectional views, respectively) as a result of a transverse loading.

[0026] FIGS. **14**(A) and **14**(B) are deflection patterns (top view and cross sectional views, respectively) as a result of an in-plane loading.

[0027] FIGS. **15** (A), **15**(B) and **15**(C) are depictions of sacrificial elements in TIMs structures according to this disclosure.

[0028] FIGS. **16**(A), **16**(B), and **16**(C) are depictions of deformation of TIBA of FIGS. **15**(A), **15**(B), and **15**(C) respectively due to a transversely applied impact force.

[0029] FIG. **17** is a plot of normalized velocities of projectiles transversely impacting TIBAs vs. time with different configurations of the TIMs cells.

[0030] FIG. **18** is a plot of reaction forces (impact direction) on frame vs. time in different model configurations.

[0031] FIG. **19** is a plot of normalized strain energy of TIBAs subject to transverse impact vs. time.

[0032] FIG. **20** is a plot of normalized frictional dissipation energy of TIBAs subject to transverse impact vs. time.

[0033] FIGS. **21**(*a*), **21**(*b*), and **21**(*c*) are depictions of deformation of the TIBA of FIGS. **15**(A), **15**(B), and **15**(C) respectively with an in-plane applied impact force.

[0034] FIG. **22** is a plot of normalized strain energy TIBAs subject to in-plane impact vs. time.

[0035] FIG. **23** is a plot of frictional dissipation energy of TIBAs subject to in-plane impact vs., time.

[0036] FIG. **24** is a plot of normalized energy dissipation of TIBA subject to transverse impact loading vs. time.

[0037] FIG. **25** is an illustration of one embodiment of this disclosure showing a plurality of battery cells, each cell surrounded by TIMs units made according to the present disclosure.

[0038] FIG. **26** is a schematic of a vehicle with two battery packs equipped with one embodiment of the TIBA enclosure arrangement of the present disclosure.

[0039] FIG. **27** is an illustration of a frame (enclosing a battery pack including battery cells and deformation units) made from TIMs.

[0040] FIG. **28** is a schematic representation of an enclosure arrangement according to the present disclosure.

DETAILED DESCRIPTION

[0041] For the purposes of promoting an understanding of the principles of the disclosure, reference will now be made to the embodiments illustrated in the drawings and specific language will be used to describe the same. It will nevertheless be understood that no limitation of the scope of the disclosure is thereby intended, such alterations and further modifications in the illustrated device, and such further applications of the principles of the disclosure as illustrated therein being contemplated as would normally occur to one skilled in the art to which the disclosure relates.

[0042] In the present disclosure, various embodiments of enclosure arrangements that can protect a battery pack with impact forces in multiple directions in the event of a vehicle collision and can improve the safety of vehicle occupants utilizing the enclosure arrangement.

[0043] In one type of enclosure arrangement, hereinafter referred to as Granular Battery Assembly or GBA, the enclosure arrangement includes deformation units around battery cell, wherein the deformation units absorb the kinetic energy of an impact providing protection for the battery cells. The kinetic energy may be absorbed by plastic deformation of deformation units. In this disclosure, deformation energy is defined as the amount of energy needed to deform deformation units. The protection of the battery cells also results in a reduced acceleration of the vehicle in the case of an impact, thus offering a level of protection for the vehicle occupants.

[0044] Referring to FIG. **1**, a schematic of a vehicle **10** with two battery enclosure arrangement modules **12** and **15** is depicted at two different locations in the vehicle wherein the enclosure arrangement modules **12** and **15** are made according to one embodiment of the present disclosure. These battery enclosure arrangement modules are also termed arrangement modules or enclosure modules in this description. Battery enclosure modules **12** and **15** are based on GBA as described above. The term GBA will be used in this description to mean battery enclosure modules such as **12** and **15**, as well as to mean any arrangement comprising battery cells surrounded by deformation units as shown in FIG. **3**, as an example. While only one battery enclosure arrangement module is shown at each location (front and rear of the vehicle in the example shown in FIG. **1**), it should be appreciated that a battery enclosure arrangement system can be placed at each location and such a system can contain one or more of the battery enclosure arrangement modules such as **12** or **15**. It should be further noted that the locations for these modules shown in FIG. **1** are for example purposes only and other locations are possible. For example, the enclosure modules and/or systems can be distributed in the vehicle based on weight, impact and vehicle dynamics and other critical factors as appropriate. The enclosure arrangement modules and/or systems can be configured in various shapes (although rectangular shapes are depicted in FIG. **1**). Various embodiments of the enclosure arrangements are discussed in the present disclosure. One embodiment is depicted in FIG. **2**.

[0045] FIG. **2** is a representation one embodiment of the Granular Battery Assembly (GBA) in a vehicle. Referring to FIG. **2** a frame **20** surrounding a plurality of battery cells **24** and deformation units **26** (also referred to as kinetic energy absorbing elements) is depicted. The plurality of battery cells **24**, the plurality of deformation units **26**, and the frame **20** in FIG. **2** are together a representation one embodiment of the Granular Battery Assembly (GBA) in a vehicle. FIG. **3** is an expanded view of the cells **24** and deformation units **26** of an embodiment of GBA. The battery cells are depicted as larger cylindrical objects with terminals disposed on the surface of each cell as well as deformation units interdisposed (depicted as smaller diameter objects) between and

around the battery cells. The battery cells are also termed as just "cells" in this description. Each cell is surrounded by six deformation units; however, larger or smaller numbers of deformation units are also possible. For example, the number of deformation units can be as low as one unit between two adjacent cells. While there may be practical limits on the number of deformation units between the cells, the limit can be larger. Furthermore, while a uniform pattern of cells/deformation units is depicted in FIGS. **2** and **3**, no such limitation exists. It should be appreciated that the pattern of cells/deformation units can be variable. For example, there may be a larger number of deformation units inter-disposed between the cells closer to the perimeter of the enclosure arrangement module or enclosure arrangement system and lower number of deformation unit towards the center of the enclosure module/system. In FIGS. **2** and **3**, each of the deformation units **26** is in contact with one or more battery cells, but not in contact with another deformation unit.

[0046] The deformation units **26** in FIGS. **2** and **3** are capable of being deformed and hence absorb kinetic energy. These entities can be made of several metallic and/or non-metallic materials. In one preferred embodiment, the deformations units can be made of aluminum metal or alloys of aluminum and are hollow cylinders. Other metallic and non-metallic materials can be used as solid cylinders or hollow cylinders. It should be appreciated that cellular material such as foam can be used and the geometry of the deformation units is not restricted to a cylinder.

[0047] An example of a deformation unit **26** is a hollow cylinder made of aluminum with an outer diameter of approximately 6.0 mm and an inner diameter of 5.0 mm, giving rise to a wall thickness of approximately 0.5 mm. An example of battery cell dimensions that can be used with deformation units with the deformation unit dimensions above is 18 mm in diameter and 65 mm in length, typically termed in industry as an 18650 battery. The thickness of the hollow cylinder is optimized based on deformation characteristics of the material in response to an impact force. Excessive wall thickness makes the cylinder not deform easily and hence will not give adequate protection for the batteries. Insufficient wall thickness will deform the cylinder too easily and will not effectively reduce the impact forces on the batteries. Other materials such as stainless steel can be used to make the deformation unit **26**. With each material, the cylinder wall thickness has to be adjusted in accordance with the desired deformation characteristics.

[0048] The deformation units **26** are configured to move with respect to one another and with respect to the battery cells **24** such that when an object impacts the vehicle and delivers an impact force, the kinetic energy is absorbed by the deformation units which undergo deformation.

[0049] Shown in FIG. **2** is frame **20**, encasing the cells and the deformation units. The frame is configured to hold these structures in place and to provide a containing envelope for battery cells and other parts during and after impact. In FIG. **2**, it should be recognized that the frame **20** has four vertical walls and top and bottom surfaces. Only some of the surfaces are shown for clarity. In some cases, the top surface may not be needed if busbars are used which can mechanically constrain battery cells in their locations. The frame **20** frame can be built in a variety of ways to accommodate the battery cells **24** and deformation units **26**.

[0050] With reference to FIG. **4**, an embodiment of an enclosure arrangement utilizing GBA according to the present disclosure is depicted. In this embodiment, the perimeter formed by four of the vertical walls **40** defines a spatial zone **45**. The spatial zone **45** can house multiple enclosure arrangement modules (that is, a battery enclosure arrangement system). Alternatively, the spatial zone **45** may comprise a combination of cell and deformation units. The advantage of such an arrangement is that a damaged enclosure modules or damaged cell/deformation combinations can be serviced or replaced.

[0051] FIG. **5** is a depiction of various elements of a high-shear battery enclosure module. In FIG. **5**, perspective and top view schematics of various aspects of the arrangement are depicted. Each numeral in FIG. **5** represents perspective and top views of the element being described. The enclosure arrangement includes a plurality of cells disposed in the enclosure. Each cell **50** may be (optional) placed in an electrically insulated casing **51**, giving rise to cell-in-casing **52**. Here the word "insulated" is used to describe the property of electrical insulation. An example of a material used to make the electrically insulated casing **51** is Polyvinyl Chloride, generally termed PVC, which is wrapped around each cell. Other materials for this purpose include polyimide, which provides electrically isolating properties at elevated temperatures. The plurality of cells-in-casing **52** are then disposed in a protective shell **53** giving rise to cells with casings-in-a-protective-shell **54** which is then encased with a high shear shell **55** made of a high-shear material configured to dissipate kinetic energy, forming a high-shear battery enclosure module **56**. A plurality of high-shear battery enclosure modules **56** can be positioned next to each other in order to generate high-shear battery enclosure systems **61** and **62** placed in a vehicle **63** as depicted in FIG. **6**. The protective shell **53** can be made of, as an example, aluminum. Other materials, such as injection-molded plastics are also candidates for making this protective case **53**. Yet, many other materials can be chosen to serve as the material for protective case **53**. High-shear shell **55** can be made of polymers such as acrylic compounds. One non-limiting example is VeroWhitePlus available from Stratasys Ltd, Eden Prairie, Minn., USA. Another material that can be used for making high-shear shell is Topologically Interlocked Materials (TIMs) system to be described later in this disclosure.

[0052] The cell modules **56** are configured to be in tight contact with one another to allow effective conversion of kinetic energy into other form of energy with the frictional energy being the most significant. In addition, the cell modules **56** are configured to spread impact forces amongst the cell modules such that a large impact force is divided into smaller magnitude forces acting on each module.

[0053] According to another embodiment of the present disclosure, the high-shear battery enclosure system depicted in FIG. **6** may also include one or more rupture modules, as depicted in FIG. **7**. FIG. **7** is a depiction of the movement of the high-shear modules and rupture modules. In FIG. **7**, a rupture module **71** is a specialty module with the same outer shape and dimensions as the high-shear shell of the high-shear enclosure arrangement module. The rupture module **71** can be placed at various locations within the high-shear battery enclosure system and is made of material that can rupture in response to a pre-determined minimum impact force. That is, a minimum impact force must exist before the rupture module ruptures. As an example, the rupture material can be made of same material as the high-shear shell **55**.

The rupture module **71** ruptures before the high-shear shell **55** can rupture since the high-shear shell **55** is in contact with the rigid shell **53**.

[0054] In FIG. **7**, movement (i.e., representative of shear strain) of the high-shear enclosure arrangement modules and a rupture module **71**, together called as modules in this paragraph, are also depicted. Each module is shown with casings-in-a-protective-shell **54**, rather than a high-shear battery enclosure module **56** for better visibility of the enclosure movement. It is appreciated that modules closer to impact force **72** will experience higher shear strain and modules farther from the impact force will have smaller shear strain. In FIG. **7**, the positions **73** of the modules prior to the application of the impact force are depicted in dashed lines and the positions **74** of the modules after the application of the impact force are depicted in solid lines. The displacement of modules closest to the impact point is the largest and the distance is shortest farthest away from the impact point. It should also be appreciated that the modules are in contact with each other in high-shear battery enclosure modules **56**, whereas modules are shown separated in FIG. **7** since FIG. **7** visualizes the modules with casings-in-a-protective-shell **54**.

[0055] Schematics of an embodiment of a rupture module are depicted in FIGS. **8**(A)-**8**(B). As depicted in FIG. **8**(A), the rupture module **81** may have shell structure made of a high-shear material. Alternatively, the rupture module may be constructed from a polymer structure which in the operating temperature range of batteries, the high-shear battery enclosure module can maintain the form depicted in FIG. **8**(A). The rupture module may contain a fluid as indicated in FIG. **8**(B). The fluid shown in **8**(B), as an example, can be a fire extinguishing fluid **83** or a coolant. In the case of using a fire-extinguishing fluid or a coolant fluid, the rupture module may be configured to rupture at a pre-determined impact force and expel the fluid. While one rupture module is depicted in FIG. **7**, these rupture modules can be strategically positioned about the high-shear battery enclosure arrangement system to provide the desired fluid released onto the remainder of the system. It should be noted that fire-extinguishing fluid or coolant, positioned elsewhere may also be released by the triggering of airbags through an electronically controlled releasing system. It should be further noted that the rupture modules containing a fluid can be pre-pressurized and electronically triggered to rupture in case of a crash or air-bag deployment in a vehicle. Crash or air-bag deployment can be sensed electronically and the sensors can initiate a rupture of the pre-pressurized and fluid-containing rupture module. Examples of a suitable fire extinguishing fluid **83** include fluids containing sodium chloride (NaCl) dry powder or fluids containing copper (Cu) dry powder. Both of these powders are used in Class "D" fire extinguishers.

[0056] Another type of battery enclosures to enhance impact resistance and mitigate the effect of impact forces on vehicle occupants will now be disclosed in this disclosure. These are based on the concept of topologically interlocking materials (TIMs). Topologically interlocked materials are a class of materials in which individual unit elements interact with each other through contact only. Cracks and other defects occurring due to external loading are contained in the individual unit elements. Thus, topologically interlocked materials are damage tolerant and provide high structural integrity. TIMs can be considered as interesting mechanical meta-materials as these derive their unique properties not from composition but from structure. Forces and energy can only be transmitted through the contact surfaces; accordingly, there are no tensile forces developed when TIMs carry loads. These unique characteristics of TIMs provide unique properties that can be utilized to produce adaptive and configurable structures to harsh conditions such as random and harmonic vibrations, thermal loads, repetitive shocks, and acoustic attenuation. In this disclosure, battery enclosures utilizing TIMs will be termed Topologically Interlocked Battery Assemblies or TIBA. Thus in this disclosure, the term TIBA can be used whenever TIMs are used as part of battery assembly.

[0057] The present disclosure describes a novel arrangement directed to a response mechanism of topological interlocked materials (TIMs) due to impact loading. The disclosure also describes the benefits of TIMs in energy absorption, as well as the mechanical and structural applications of TIMs. In particular, a novel TIMs assembly arrangement for battery enclosures (topological interlocked battery assembly, "TIBA") is disclosed. TIMs include dense packing of tetrahedral unit elements made of polymers, such as Acrylonitrile Butadiene Styrene (ABS) and Acrylic. The tetrahedral unit elements are fabricated using fused deposition modeling (FDM) additive manufacturing (AM) as described in literature. Limited exploratory research has been done in understanding the mechanical characteristics of these TIMs, more specifically TIMs subject to low velocity impact. According to the present disclosure, the impact velocities considered (in the case of impact in a battery enclosure situation) are much lower than the dilatational wave speed of the material in the unit elements ($v_{imp}<c_d/10$), where V_{imp} is impact velocity and c_d is dilatational wave speed. A finite element methodology was employed to conduct numerical experiments. First, the model was calibrated on experimental data of low and constant velocity loading. Then, the response under constant applied velocity was considered, and the contributions of inertia, elastic resistance, and contact and friction to the mechanical resistance were explored. Subsequently, impact loading was considered and the formulations in literature were employed to characterize the velocity response. These models were reformulated to provide specific insight into the impact response of the TIMs assemblies. A comparison to monolithic structures under impact was made.

[0058] FIGS. **9**(*a*)-**9**(*e*) show the model system under consideration with (a) a regular tetrahedron as the basic unit of the TIMs assembly, (b) a boundary element (termed abutment), (c) the indenter/projectile and the center five tetrahedra onto which the indenter transferred the load, (d) the TIMs tile composed with identical regular tetrahedra, (e) the overall TIMs assembly together with the cylinder shaped indenter/projectile shown in a transverse direction. In FIG. **9**(*e*), **91** represents the fixture or abutments for the TIMs being investigated. In the model assembly, total of N×N=49 (where N is the number of tetrahedra in one row/column of topologically interlocked material assembly) substantially identical tetrahedra were assembled in a square lattice pattern into a monolayer TIMs assembly, which was confined with abutments along the edges of the assembly. The edge length of an individual regular tetrahedron was so, where so is edge length of regular tetrahedron. The other dimensions of the TIMs assembly could be derived as the thickness of the monolayer $t=s_0/\sqrt{2}$, the dimension of the

mid-plane of the TIMs assembly, $L=s_0\times(N/2)$. Here, the TIMs assembly was characterized by N=7 and s_0=25 mm, such that t=17.7 mm and L=87.5 mm.

[0059] In the analysis, two loading conditions were considered: (1) constant velocity loading by an indenter and (2) impact loading by a projectile. In both cases, the load was applied to the center of the TIMs assembly such that the indenter/projectile interacts directly with tetrahedra #1, #2, and #3 of the assembly. The diameter D of the indenter/projectile is D=L/5.

[0060] Tetrahedra were considered to be isotropic and elastic. Motivated by prior experiments on TIMs assemblies, the material properties of ABS were employed (Young's modulus E=1.827 GPa, Poisson's ratio ν=0.35, density ρ_0=950 kg/m^3). As a result, one tetrahedron possesses a mass of $m_0=1.75\times10^{-3}$ kg and the overall assembly weighed 8.58×10^{-2} kg. The abutments as well as the indenter/projectile were considered as rigid bodies. The density of the projectile was $\hat{\rho}$=1470 kg/m^3. A Coulomb friction model was employed which introduces the coefficient of friction μ. For the normal contact behavior, it was assumed that contact pressure p_c was linearly dependent on the overclosure $\Delta_n$as$p_c=K_c\Delta_n$, where $K_c=(K^*E^*)/(\pi s_0)$ was the contact stiffness with K* a normalized contact stiffness, and $E^*=E/[2(1-\nu^2)]$. This type of interactions was adopted to describe the contact behaviors for the inter-tetrahedra, tetrahedron-abutment, and tetrahedra-indenter contacts. Experimental data on the low velocity impact response of TIMs assemblies from literature was used to calibrate the model parameters μ and K*.

[0061] Fragmentation commonly occurs for brittle materials subject to impact loading. To compare the impact resistance of TIMs made by brittle materials with and without fragmenting, a cohesive zone model (CZM) was further developed. Motivated by the TIMs used in experiments in which the tetrahedra were made with additive manufacturing, the zero thickness cohesive zone (CZ) layers were created parallel to the mid-plane of TIMs assembly, i.e., perpendicular to the impact direction, which was meshed with cohesive element COH3D8. In each tetrahedron, equally spaced eight CZ layers were inserted. Therefore, each tetrahedron contained 10 solid layers and 8 CZ layers. A bilinear traction-separation law was used to describe the constitutive response of CZM, with maximum strength σ_{max}=E/100, failure separation $\delta_f=s_0/1000$ and damage initiation separation $\delta_0=\delta_f/10$. Since ABAQUS/Explicit method was used to solve the dynamic problem, the density of the CZ layer needed to be defined. In the simulations for TIMs with CZ layers, the density of the CZ layer was ρ_{coh}=1.0 kg/m^3 which did not increase the inertia of the structure significantly, as well as the computational difficulty. Aside from the CZ properties, all the other properties and conditions were the same as the ones used in the impacting simulations of TIMs with isotropic tetrahedra.

[0062] In the constant velocity cases, a predetermined displacement was applied on the indenter and the time interval of loading was varied in order to achieve a constant velocity V_0. In the impact cases, a projectile of a defined mass M with initial velocities V_{imp} struck the TIMs assembly. The mass of the projectile was chosen as 10% of the total mass of the 7×7 tetrahedra. The abutments were fixed in space in all cases.

[0063] Finite element models of the TIMs assembly were constructed in the general purpose finite element code ABAQUS (Version 6.12). The finite element mesh employed 3D linear solid element (C3D8R in the ABAQUS code) with each tetrahedron being comprised of 500 elements such that the overall model included 24,500 elements. The model was solved using the ABAQUS/Explicit solver, and the general contact algorithm implemented in the ABAQUS software was employed. In all the simulations, one analysis step was defined. The automatic time increment algorithm was employed and the global stable increment estimator was selected. The step time period for constant velocity loading varied dependent on loading velocities while an analysis interval of 5 ms was considered in all impact loading cases.

[0064] In prior experiments, a drop mass of M_{drop}=6.21 kg and drop height H_{drop}=36.58 mm were employed. Since the drop mass significantly exceeded that of the TIMs assembly, a near constant velocity loading condition (V_0=0.925 m/s) was achieved in the experiment. The data of the forces-deflection record was used to calibrate the parameters μ and K*.

[0065] The computational study provided the force-deflection relationships of TIMs for contact stiffness (K*=0.5) and different coefficients of friction. From computations considering a range of values of μ ($0.1<\mu<1.0$), at a contact stiffness K*=0.5, force-deflection responses typical of TIMs assemblies was predicted. The force initially increased with the deflection. As soon as the force reached its peak value, gradual softening occurred until the resistance of the TIMs assembly vanished. The resistance of the TIMs assembly to the applied load was found to increase with an increase in coefficient of friction μ. The predicted peak force increased from 48.5 N to 513.0 N when μ was changed from μ=0.1 to 1.0. The results also indicated an increase of the deflection to final collapse of the TIMs with an increase in μ. For the lowest value of μ considered (μ=0.1), the load carrying capacity of the TIMs substantially vanishes at a deflection of 22.0 mm; however, this limiting deflection increased more than double for cases considering higher values of μ. The next set of computations considered a range of contact stiffness values ($0.1<K^*<1.0$) and constant coefficient of friction μ=0.3. It was found that the magnitude of the predicted forces increased with increased contact stiffness. The peak force was found to increase from approximately 52.0 N to 513.0 N as K* was increased from K*=0.1 to 1.0. However, the deflection to loss of load carrying capacity did not vary significantly at about 35.0 mm for all cases.

[0066] The results of the parametric computations indicated that the coefficient of friction affected both the magnitude of the force and the deflection to final failure, while the contact stiffness played a role only in the force magnitude. Therefore, a calibration procedure was developed. First, the coefficient of friction was calibrated with respect to the experimental results of the deflection to final failure. Then, the contact stiffness was selected to provide a final force-deflection relationship consistent with experimental results. The calibrated parameters were μ=0.2 and K*=0.38. Model predictions of the force-deflection response obtained using the best-fit parameters for μ and K* together with the experimental data demonstrated a good quantitative agreement. A good qualitative agreement was also seen for residual deformations of the TIMs assemblies and the model simulation.

[0067] Simulations of TIMs subjected to constant velocity loading were conducted with applied velocities ranging from

0.1 m/s to 10 m/s. For the lowest velocity case, μ_0=0.1 m/s, the force increased smoothly with the increase of deflection., The deflection reached its peak at 11.0 mm, then the deflection decreased gradually to zero. As the applied velocity increased, multiple peaks developed in the force-deflection relationship. When the loading speed was greater than 1 m/s but less than 5 m/s, the first peak increased with increasing velocity dramatically, while the second peak maintained its value. When the loading speed was greater than 5 m/s, both first and second peaks increased with increasing velocity.

[0068] Force-deflection relations for V_0=0.1 m/s with confinement, V_0=4 m/s with and without confinement were developed. A simulation for unconfined TIMs meant that the abutments, shown in FIG. **9**(*b*), were taken away in the computation. In this case, the force increased quickly to its peak value then dropped immediately. There was no support force acting on the TIMs tile except a force due to the 'inertia' of the TIMs tile, where the presence of inertia force suggested the dynamic loading as opposed to the quasistatic loading. Since there was no such phenomenon occurred for the V_0=0.1 m/s case, the V_0=0.1 m/s case can be considered as a quasistatic loading case. Therefore, the force-deflection relationship for the V_0=4 m/s with confinement was considered as the sum of the other two cases: Quasistatic response and unconfined model response with same impact velocity.

[0069] The velocity of center tetrahedron was defined at the center of the center tetrahedron. The center tetrahedron was the tetrahedron that the indenter directly strikes on, T**1** as shown in FIG. **9** (c). Analysis of the velocities of center tetrahedra during the indentation was performed using the relatively low and high indention velocities of V_0=4 and 10 m/s, respectively. The result of analysis demonstrated that the velocities increased with time at the beginning of indention, then decreased and increased alternatively. Finally, the velocity converged to the constant velocity. Overshoots occurred during indention. For V_0=10 m/s, after the force reached its peak value, the velocity of center tetrahedron dropped far below the indentation speed because of the interaction with adjacent tetrahedra through contact. Then, the indenter accelerated again, which resulted in a second peak force in the force-deflection relationship. For V_0=4 m/s, there was also a situation where the center tetrahedron speed is lower than that of indentation speed. However, the speed difference is not significant, so the re-acceleration was not observed in the force-deflection relationships.

[0070] All series of computations with impact velocities ranging from 1 m/s to 80 m/s were performed with all simulations employing the calibrated model parameters. The ballistic limit for the TIMs assembly was determined as V_{bl}=34 m/s, such that at the end of this impact event the velocity of the projectile was zero. Below V_{bl} the projectile rebounded. Then, above V_{bl}, the target was penetrated. An analysis of the force-displacement responses of the projectile for low and relatively high impact velocities showed that the forces increased at the beginning of impact, reached their peaks then decrease with displacement. Similar to the constant velocity loading cases, the reaction forces increased with increasing of loading speed. Then, the second peak was developed. While the impact loading results in lower reaction force for the same initial loading velocities, for higher impact cases, rebound and penetration were observed for different impact velocities. It was further demonstrated that that the TIMs absorbed higher amount of impact energy with higher impact velocity. The results of the forgoing analysis were used to predict the velocities of center tetrahedron and projectile for impact velocity V_{imp}=4 and 10 m/s, respectively. Comparison of the results with constant velocity loading showed that center tetrahedron obtained smaller velocity under impact loading when the initial loading speed for both cases were the same. After the center tetrahedron decelerated due to the interaction with surrounding tetrahedra, the velocity difference between projectile and center tetrahedron became smaller in the impact loading case. This observation explained the differences among force peaks described earlier in the analysis of the force-displacement relationships.

[0071] The velocity histories of the projectile and the center five tetrahedra, FIG. **9**(C) were analyzed for four values of the impact velocity V_{imp}. In all cases $V_{imp} \geq V_{bl}$. At the ballistic limit, both velocities of the tetrahedra and the projectile reached zero. For impact velocity slightly higher than ballistic limit, V_{imp}=45 m/s, the velocities of the center tetrahedron and the projectile velocity were slightly larger than that of the surrounding tetrahedra. This indicated that the projectile strongly interacted not only with the center tetrahedron but also with the surrounding tetrahedra due to the topological interlocking. For relatively high impact velocity cases, this situation changed. For V_{imp}=55 and 80 m/s, the center tetrahedron gained much higher velocity than its neighbors. Still, for V_{imp}=55 m/s the projectile velocity was similar to that of the surrounding unit elements indicating that the TIMs continued to provide some level of resistance. Only at much higher impact velocity, V_{imp}=80 m/s, such interaction was lost and the projectile velocity increased beyond that of the surrounding tetrahedra. Analysis of the deformed configurations of the TIMs assemblies during impact confirmed these different levels of interaction between projectile and the TIMs target.

[0072] The central variable to characterize the resistances of plates and plate-like systems to impact is the residual velocity of the projectile after passing the target. When the impact velocity is greater than the ballistic limit velocity, the projectile penetrates the target and keeps moving forward with non-zero kinetic energy. For conventional metal plates or plate-like targets a formula from literature predicts the residual velocity as follows:

$$V_{res} = \begin{cases} 0, & V_{imp} \leq V_{bl} \\ a(V_{imp}^p - V_{bl}^p)^{1/p} & V_{imp} > V_{bl} \end{cases}$$

in which a an p are constants to be fitted with the residual velocity data, V_{imp} is impact velocity and V_{bl} is ballistic velocity. Using a model available in literature, Lambert-Jonas model, a nonlinear least square method was employed to obtain the fitting parameters a=0.343 and p=1.487. The coefficient of determination (R^2) was calculated to be 0.9570, indicating the curve fits the numerical results well.

[0073] The fitted Lambert-Jonas model could provide an overall good description of the numerical results. Still, for higher impact velocities, the model fit was less accurate than for velocities close to the ballistic limit. A detailed examination of results led to the conclusion that the residual velocities solution could be separated into at least two regimes (below and above 56 m/s). Such differences in the

response were traced back to the velocity history of projectile and tetrahedra and were due to the differences in interaction with the unit elements in the TIMs assembly. In summary, two limiting conditions were defined: (i) low velocity regime with strong persisting projectile—target interaction and (ii) a high velocity regime with weak projectile-target interaction. A transient regime existed at intermediate velocities. The transition regime was of particular interest as a local minimum in the residual velocity was present. In order to capture this response in the Lambert-Jonas formulism, a two-stage expanded Lambert-Jonas model was defined.

$$V_{res} = \begin{cases} 0, & V_{imp} < V_{bl} \\ a_1(V_{imp}^{p_1} - V_{bl}^{p_1})^{1/p_1}, & V_{bl} \le V_{imp} \le V_{trans} \\ a_2(V_{imp}^{p_2} - V_V^{p_2})^{1/p_2}, & V_{imp} > V_{bl} \end{cases}$$

In the above model, V_{trans} is the transition velocity between the two limiting regimes, V_v is a virtual ballistic velocity fitted on high impact velocity regime, and a_1, a_2, p_1 and p_2 are characterizing parameters. The residual velocity data were fitted to the two-stage model with fit parameters a_1=0.308, a_2=0.425, p_1=1.772, p_2=1.528, V_v=46 m/s, and V_{trans}=56 m/s, respectively. Based on the analysis, the coefficient of determination for low impact velocity was 0.9498 while for high impact velocity was 0.9883, which indicated a much better fitting with two-stage Lambert-Jonas model than the basic model for the high impact velocity regime.

[0074] To further explore the finding of the regime with a local minimum in residual velocity, computations were performed with a lower and higher value of μ, 0.15 and 0.25 respectively. The fit parameters for the projectile residual velocities vs. impact velocities are shown Table 1 below. In fitting the parameters, p_1 and p_2 were constrained to be greater than the one demonstrated in literature. Results discussed earlier show that the ballistic velocities and transition velocities increased with the increased μ. The charactering parameters a_1, p_2 and V_v increased with μ while a_2 and p_1 decreased, monotonically. The two regimes in the residual velocities were independent of the friction condition. However, the importance of the transition regime with minimal velocity diminished or vanished as the coefficient of friction increased.

TABLE 1

Parameters of the two-stage Lambert-Jonas model

	a_1	a_2	p_1	p_2	V_{bl} [m/s]	V_V [m/s]	V_{trans} [m/s]	R^2
μ = 0.15	0.240	0.484	2.230	1.266	28	44	55	0.9083/0.9592
μ = 0.20	0.308	0.425	1.772	1.528	34	46	56	0.9498/0.9883
μ = 0.25	0.325	0.370	1.721	2.016	39	52	65	0.9914/0.9923

[0075] In addition, numerical analysis involved with four impact velocities (V_{imp}=34, 45, 55 and 80 m/s) were performed with the model enhanced by cohesive zone elements. Table 2 lists the terminal velocities for isotropic TIMs and CZ enhanced TIMs models. Using these results the projectile velocities for V_{imp}=55 m/s can be computed and compared. Then, a similar comparison was made for other impact velocity cases. Analysis of the fragmentation of CZ enhanced TIMs for different impact velocities showed that the CZ enhanced model resists impact better at lower projectile residual velocity. On the other hand, the difference was not significant when impact velocity was high. The result of the energy distributions showed that the CZ enhanced TIMs had higher kinetic energy at the end of impact event, which resulted from the fragmentation of the TIMs.

TABLE 2

Terminal velocities of TIMs with and without CZ enhancement [m/s]

	V_{imp} = 34 m/s	V_{imp} = 45 m/s	V_{imp} = 55 m/s	V_{imp} = 80 m/s
Isotropic TIMs	0	8	10	23
CZ enhanced TIMs	−2	2	8	18

[0076] The simulations of the TIMs response under constant loading speed provided insight into the relevance of the material parameters in the TIMs system. The responses were divided into three categories according to loading speeds as follows: Quasi-static response at low speeds, combination of quasi-static and dynamic response, and dominant dynamic. For quasistatic case, a quasi-ductile response was observed, which agreed with the experimental observation reported in literature. For moderate indentation speeds, the force-deflection response was considered as the combination of quasistatic response and unconfined TIMs under same indention speed. The transition speed is determined by the density of TIMs material and the normal contact behavior, while coefficient of friction does not affect the inertia responses significantly.

[0077] The dynamic characteristics of TIMs were further investigated with projectile impact loading conditions. The projectile residual velocity was used as the parameter to illustrate TIMs' resistibility to impact, with Lambert-Jonas models being employed to describe the numerical results. To have a more accurate description of the residual velocity results, an extended two-stage Lambert-Jonas model was developed. For conventional plate, the Lambert-Jonas formula was fitted with a=0.76 and p=2.36 based on experimental data in literature for ballistic penetration of steel plates. Another investigation in literature applied the model to a bi-layer metal system and obtained ranges of the parameters for different thicknesses of metal plates: 0.93<a<0.97 and 1.72<p<2.14. Other experimental and numerical results also indicated that for homogeneous plates and composite plates, a is close to 1.0 and p is close to 2.0. Comparing to the parameters in the Lambert-Jonas model for TIMs with conventional plates, the parameter p is close to that of conventional plates while a is significantly smaller.

According to Lambert-Jonas formulism, a smaller a indicates lower residual velocity, therefore, more kinetic energy absorption.

[0078] Residual velocity comparison was performed between TIMs with isotropic tetrahedra or CZ enhanced tetrahedra. When the impact velocity was close to ballistic velocity of TIMs with isotropic tetrahedra, the residual velocities for TIMs with CZ layers were smaller. The increased stiffness of TIMs was due to the fragmentation. At the end of impact events, energy distribution of the entire system showed that the kinetic energy of the tetrahedra and fragments of TIMs with CZ layers was higher than TIMs with isotropic tetrahedra. These results were confirmed with the result of this study. For example, when the impact velocity was 34 m/s, every tetrahedron was almost motionless for TIMs without CZ layers at the end of impact. On the other hand, for TIMs with CZ layers, fragments fly with non-zero kinetic energy. Therefore, because of fragmentation, the implementation of CZ layers into TIMs actually increased TIMs' dynamic stiffness. The increment in dynamic stiffness is remarkable when impact velocities are close to ballistic velocity. For high impact velocities (V_{imp}=55 and 80 m/s), the differences of kinetic energies of tetrahedra/fragments for both models were not significant resulting in similar residual velocities as shown in Table. 2. It was also observed that damage was localized for TIMs. That is, only the tetrahedra directly impacted and their neighbors were damaged, while the tetrahedra away from the impact center kept their structural integrities.

[0079] FIG. **10** depicts method of assembly of the tetrahedral units, according to at least one embodiment. The stepwise assembly of a unit is based on orienting tetrahedron subunits according to orthogonal and parallel axes. Tetrahedron shown in FIG. **10** is fully constrained by its neighbors. Since there is no binder material between unit cells, forces and energy are substantially transmitted through the contact surfaces.

[0080] Referring to FIGS. **11**(A) and **11**(B), two TIBA assemblies are shown utilizing tetrahedral structures (FIG. **11**(A)) as well as cube structures (FIG. **11**(B)). It should be noted that other Platonic solids (octahedron, dodecahedron and icosahedron) can also be used as basic units.

[0081] Referring to FIGS. **12**(A) and **12**(B), two types of impact on TIMs **124** are depicted. In the first type (FIG. **12**(A)), a transverse loading using a load application device **121** is depicted, as described below. In the second type (FIG. **12**(B)) an in-plane loading using a load application device **122** is depicted. Load applying devices are well known to those of ordinary skill in the art. Due to the interlocking of unit cells, TIBA can carry both transverse and in-plane loading. In FIGS. **12**(A) and **12**(B), **123** represents the enclosing structure (abutments) for the TIMs being investigated.

[0082] Referring to FIGS. **13**(A) and **13**(B), deflection patterns (top view and cross sectional views, respectively), are depicted as a result of a transverse loading (with reference to FIG. **12**(A)). FIG. **13**(B) demonstrates that in-plane stresses develop during the impact.

[0083] Referring to FIGS. **14**(A) and **14**(B), deflection patterns (top view and cross sectional views, respective), are depicted as a result of an in-plane loading (with reference to FIG. **12**(B)). FIGS. **14**(A)-(B) demonstrate that out-of-plane stresses develop during the impact due to the oblique angle of contact surfaces.

[0084] According to one embodiment, the TIMs structure can include sacrificial elements, Exemplary configuration are depicted in FIGS. **15**(A) (single cells located at center of TIMs assembly, with example **151**), **15**(B) (cells in a row or column, with example **152**), and **15**(C) (cells disposed diagonally, with example **153**). It should be noted that random locations are also possible in selected cases. In FIGS. **15**(A)-**15**(C), **155** represents the fixture or abutments for the TIMs being investigated. While the ordinary elements are intended to deform and have surface movement with respect to each other, thereby converting kinetic energy of a transverse or in-plane impact to a heat and deformation, and then return to their pre-impact position and shape (i.e., elastic deformation) the sacrificial elements are configured to deform differently. In one embodiment, the sacrificial elements are configured to initially deform elastically and then deform plastically (permanently), hence the name sacrificial. The sacrificial elements can be made of rigid-crushable foam. The mechanical criterion for the material for the sacrificial element is that the material has a lower mechanical strength than the other tetrahedral elements of the TIMs structure and the battery cells. Further requirements include being inert and capable of substantial energy absorption. A non-limiting example of a material for the sacrificial element is rigid polyvinylchloride (PVC) foam. The properties of the sacrificial element can be optimized for each configuration. In another embodiment, the sacrificial elements may include a fluid that when the element has sufficiently deformed, the deformation causes rupture of the element, allowing the fluid to be expelled. The fluid can be in the form of a coolant, or a fire extinguishing fluid. The expelled fluid can be used to put out fire or cool battery cells (not shown). Examples of suitable fluids for this are fire-extinguishing fluids which include fluids containing sodium chloride (NaCl) dry powder or fluids containing copper (Cu) dry powder. Both these powders are used in Class "D" fire extinguishers.

[0085] Referring to FIGS. **16**(A), **16**(B), and **16**(C), the TIBA of FIGs. FIGS. **15**(A), **15**(B), and **15**(C) are depicted in a deformed manner with a transversally applied impact force, respectively. In FIGS. **16**(A)-**16**(C), **161** represents the fixture or abutments for the TIMs being investigated.

[0086] Referring to FIG. **17**, normalized velocities of projectiles transversely impacting TIBAs with different configurations are depicted. The velocities are normalized with the impact velocity. The results indicate that with optimized arrangement of sacrificial units, the resistance of TIBA can be optimized. FIG. **18** shows reaction forces (impact direction) on frame with different model configurations. The sacrificial units can significantly reduce the force transferred. FIG. **19** depicts strain energy of TIBAs subject to transverse impact. FIG. **20** depicts frictional dissipation energy of TIBAs subject to transverse impact.

[0087] Referring to FIGS. **21**(*a*), **21**(*b*), and **21**(*c*), the TIBA of FIGS. **15**(A), **15**(B), and **15**(C) are depicted in a deformed manner with an in-plane applied impact force, respectively. In FIG. **21**, the enclosure for TIMs is represented as **211**. In FIGS. **21**(*a*)-**21**(*c*), **211** represents the fixture or abutments for the TIMs being investigated.

[0088] Referring to FIG. **22**, strain energy of TIBAs subject to in-plane impact are depicted. Referring to FIG. **23** frictional dissipation energy of TIBAs subject to in-plane impact is depicted.

[0089] Referring to FIG. **24**, the energy dissipation of TIBA subject to transverse impact loading is depicted. It can be seen that frictional dissipation dominates the energy dissipation. While the frictional dissipation is a function of impact loading, material properties and contact parameters. Among them, contact parameters play significant role in the friction energy, which is desirable to achieve higher energy absorption. The parameters can be optimized with modifying the cell surfaces.

[0090] Sacrificial cells in TIBA act like safety fuses: when the impact loading is severe, they break to prevent extremely high stress developing in TIBA. Different arrangements of sacrificial elements can be employed to optimize the performance of TIBA in absorbing impact energy.

[0091] FIG. **25** is an illustration of one embodiment of this disclosure where in a plurality of battery cells (an exemplary cell **250** is shown), each cell surrounded by deformation units (an exemplary unit **251** is shown.) made according to the present disclosure. These deformation units can be made from aluminum or stainless steel as previously described. It may be possible to make the deformation units **251** as a topologically interlocked material, though the processes for making different geometries with TIMs can be complex and the size of TIMs units have to be carefully selected. A non-limiting example of a material from which TIMs structures can be made is VeroWhitePlus available from Stratasys Ltd, Eden Prairie, Minn., USA. Acrylonitrile butadiene styrene (ABS) and Acrylic are examples of a material that can be used to make TIMs. TIMs can be made using additive manufacturing techniques as mentioned earlier. TIM structures can then be assembled using techniques such as self-assembly, robotic assembly, and other special mechanisms.

[0092] Referring to FIG. **26**, a schematic of a vehicle **260** with two TIBA battery enclosure systems is depicted, according to one embodiment of such enclosure arrangement. Each enclosure system in FIG. **26** contains one TIBA battery enclosure module. However, a TIBA battery enclosure system can contain a plurality of battery enclosure modules. While two TIBA enclosure systems are depicted, it is understood that the number of TIBA enclosure systems can be one or more than two. Similarly, various locations of the vehicle can be used for the TIBA battery enclosure systems. The TIBA enclosure systems can be configured in various shapes (although rectangular systems are depicted in FIG. **26**).

[0093] Referring to FIGS. **26-27**, a frame **274** made of TIMs, a plurality of battery cells **271**, and deformation units **272** made as described above with reference to deformation units **251**, are depicted. The battery cells are depicted as larger cylindrical objects **271** with terminals disposed on the surface of each cell as well as deformation units **272** inter-disposed (depicted as smaller diameter objects) between and around the cells. Each cell is surrounded by six deformation units; however, larger or smaller numbers of deformation units are also possible. For example, the number of deformation units can be as low as one unit between two adjacent cells. It should be appreciated that the deformation units can be formed into a number of geometrical shapes, and no limitations should be associated with the cylindrical shape depicted. While there may be practical limits on the number of deformation units between the cells, the limit can be larger than six. Furthermore, while a uniform pattern of cells/deformation units is depicted in FIGS. **26-27**, no such limitation exists. It should be appreciated that the pattern of cells/deformation units can be variable. For example, there may be a larger number of deformation units inter-disposed between the cells closer to the perimeter and lower number of deformation unit towards the center of the pack.

[0094] The deformation units are configured to move with respect to one another and with respect to the battery cells such that when an object impacts the pack and delivers an impact force, the kinetic energy is converted to frictional energy as the deformation units slide and experience relative shear motion with respect to one another and with respect to the cells as well as strain energy as the deformation units deform.

[0095] Also shown in FIGS. **26** and **27**, are frames encasing the cells and the deformation units. FIG. **27** is an illustration of a TIBA battery enclosure system with the frame **274** made from TIMs. These frames are configured to hold the structures comprising battery cells and deformation units in place and to provide a containing envelope during and after impact. The frames and the deformation units in one embodiment can be called a TIBA-based enclosure or just TIBA. The term TIBA can also be used to represent an assembly of frame and batteries and deformation units or combinations thereof such as frame and batteries, batteries and deformation units, or just deformation units.

[0096] With reference to FIG. **28**, an embodiment of an enclosure arrangement utilizing TIBA according to the present disclosure is depicted. In this embodiment, the perimeter formed by four of the vertical walls **282** made of TIMs defines a spatial zone **280**. The spatial zone **280** can house multiple TIBA enclosure arrangement modules (that is, a TIBA-based battery enclosure arrangement system). Alternatively, the spatial zone **280** may comprise a combination of battery cells and deformation units. The advantage of such an arrangement is that damaged enclosure modules or damaged cell/deformation combinations can be serviced or replaced.

[0097] While the present disclosure has been described with reference to certain embodiments, it will be apparent to those of ordinary skill in the art that other embodiments and implementations are possible that are within the scope of the present disclosure without departing from the spirit and scope of the present disclosure. For example, GBA and TIBA can be combined to provide impact resistance to a battery pack. That is, battery cells can be surrounded by deformation units as described with reference to GBA and enclosed in a frame made of TIMs. One can deploy several enclosure modules or systems in a vehicle, some utilizing GBA technology and some utilizing TIBA technology. Further, GBA and TIBA can be chosen depending on the application. Thus, the implementations should not be limited to the particular limitations described. Other implementations may be possible. It is therefore intended that the foregoing detailed description be regarded as illustrative rather than limiting. Thus, this disclosure is limited only by the following claims.

1. A high-shear battery enclosure arrangement system for a vehicular battery system comprising:

a plurality of high-shear enclosure arrangement modules, each high-shear enclosure arrangement module comprising a high-shear shell encasing at least one rigid protective shell, wherein the at least one rigid protec-

tive shell includes a plurality of electrically insulated cases, each electrically insulated case includes a battery cell.

2. The high-shear battery enclosure arrangement system of claim **6**, further comprising at least one rupture module disposed amongst the plurality of high-shear enclosure arrangement modules.

3. The high-shear battery enclosure arrangement system of claim **7**, wherein the rupture module contains a fluid.

4. The high-shear battery enclosure arrangement system of claim **8**, wherein the fluid is a fire extinguishing fluid configured to be expelled out onto neighboring high-shear battery arrangement enclosure modules in response to a pre-determined impact force.

5. The high-shear battery enclosure arrangement system of claim **9**, the fire extinguishing fluid is a fluid containing sodium chloride (NaCl) dry powder.

6. The high-shear battery enclosure arrangement system of claim **9**, the fire extinguishing fluid is a fluid containing copper (Cu) dry powder.

* * * * *