US 20110256433A1

(19) United States

(12) Patent Application Publication

(10) Pub. No.: US 2011/0256433 A1

(43) Pub. Date: Oct. 20, 2011

Fuhr et al.

(54) **CURRENT COLLECTOR FOR AN ELECTROCHEMICAL CELL**

(75) Inventors: **Jason Fuhr**, Sussex, WI (US); **Gerald K. Bowen**, Cedarburg, WI (US); **John P. Dinkleman**, South Milwaukee, WI (US); **Thomas J. Dougherty**, Waukesha, WI (US); **Wataru Tsutsui**, West Lafayette, IN (US); **Chris Bonin**, South Milwaukee, WI (US)

(73) Assignee: **Johnson Controls- SAFT Advanced Power Solutions LLC**

(21) Appl. No.: **13/087,277**

(22) Filed: **Apr. 14, 2011**

Related U.S. Application Data

(63) Continuation of application No. PCT/US2009/065365, filed on Nov. 20, 2009.

(60) Provisional application No. 61/116,993, filed on Nov. 21, 2008, provisional application No. 61/172,148, filed on Apr. 23, 2009.

Publication Classification

(51) **Int. Cl.**

H01M 4/64	(2006.01)
H01M 2/12	(2006.01)
H01M 2/30	(2006.01)
H01M 2/02	(2006.01)

(52) **U.S. Cl.** **429/82**; 429/211; 429/178

(57) **ABSTRACT**

A current collector for an electrochemical cell includes a member having an outer member and an inner member coupled to the outer member by a plurality of flexible arms configured to allow the inner member to move relative to the outer member.

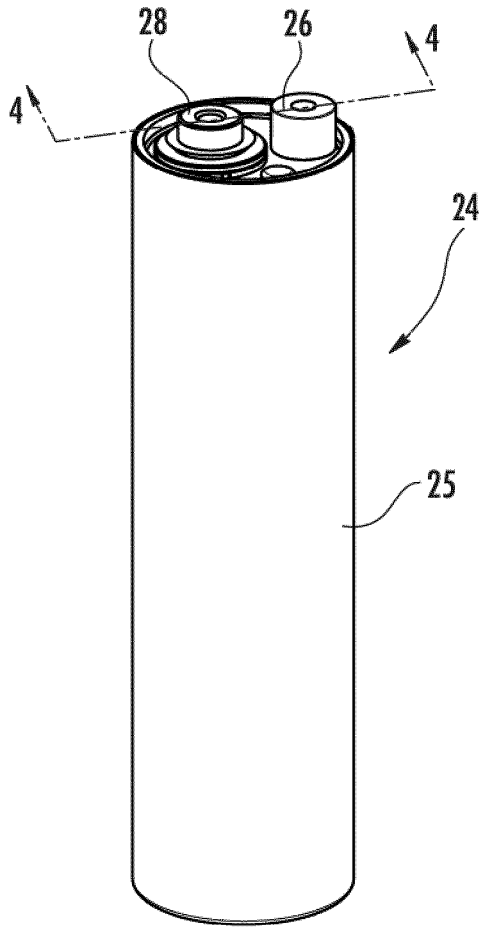

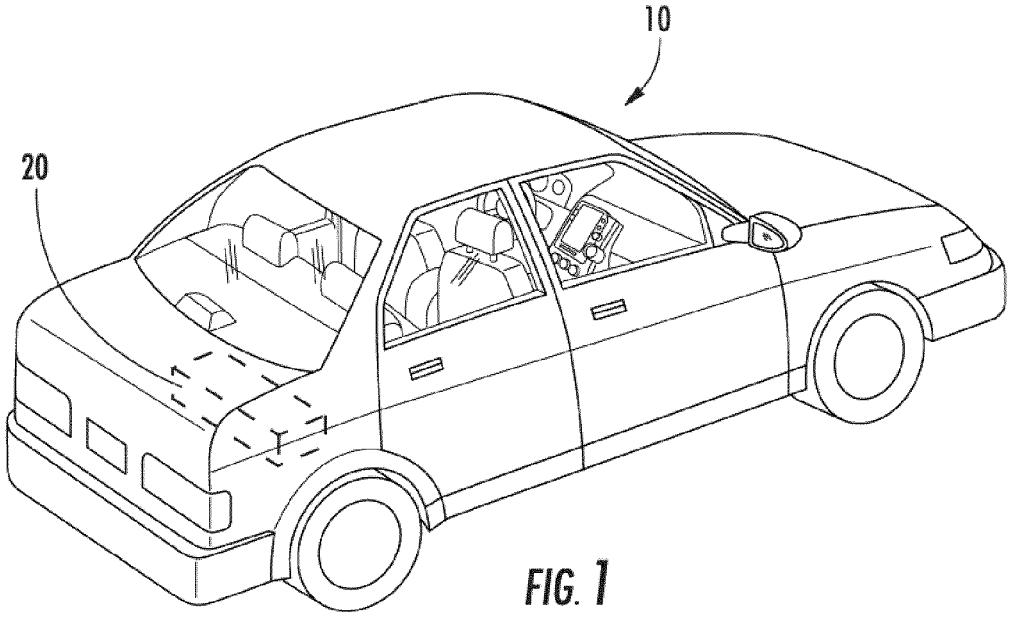

FIG. 1

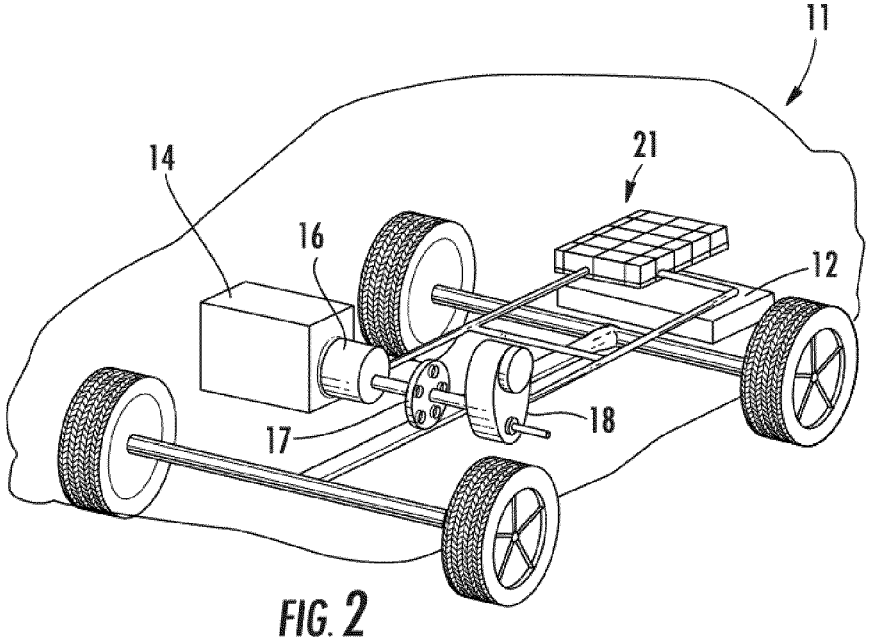

FIG. 2

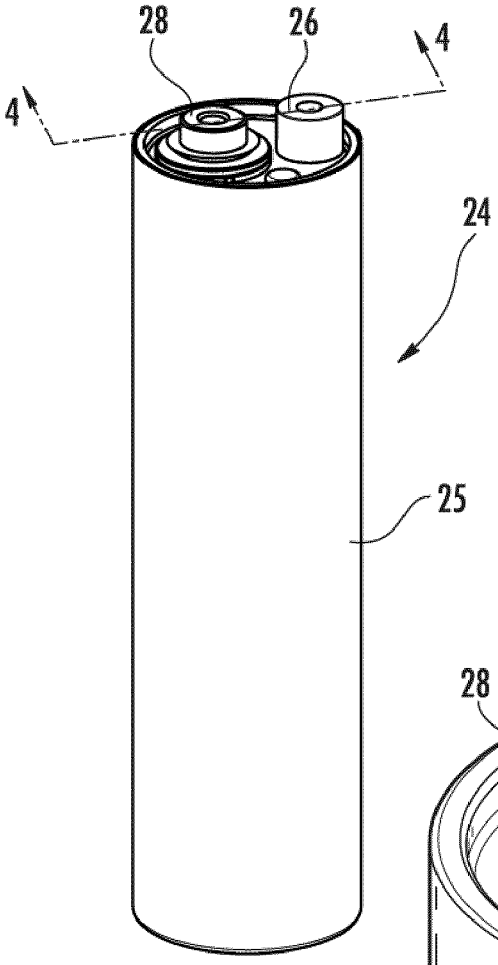

FIG. 3

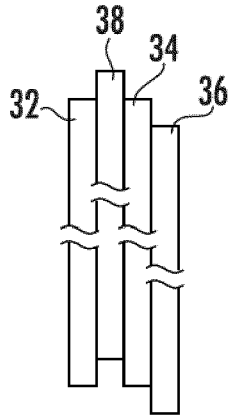

FIG. 5

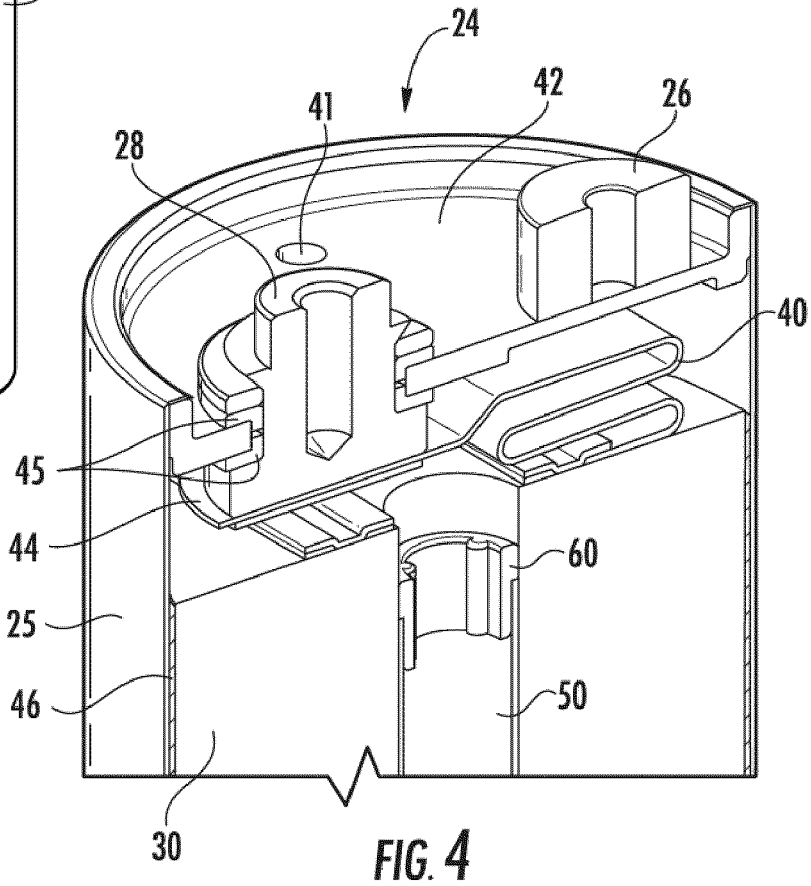

FIG. 4

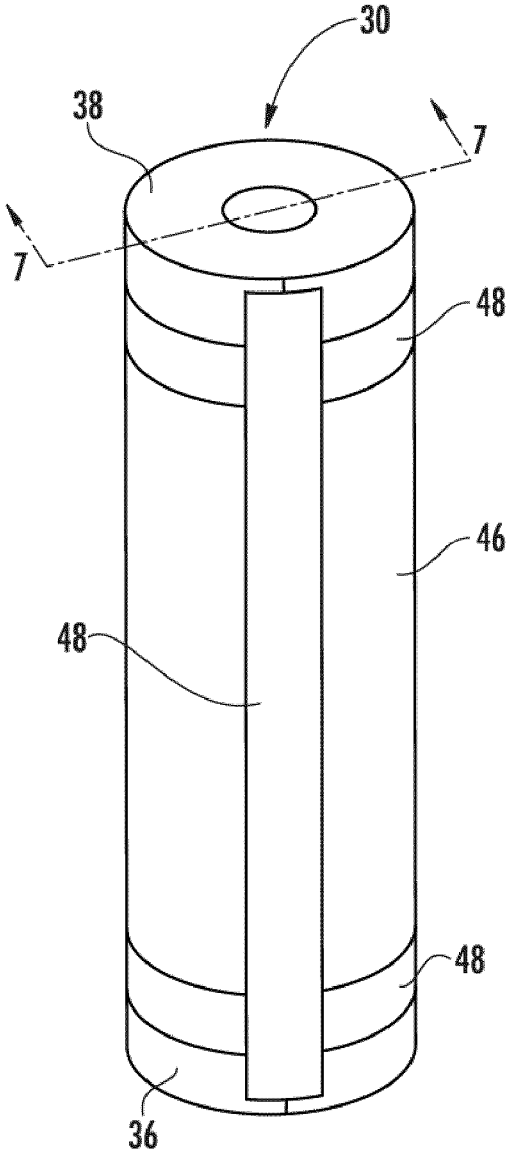

FIG. 6

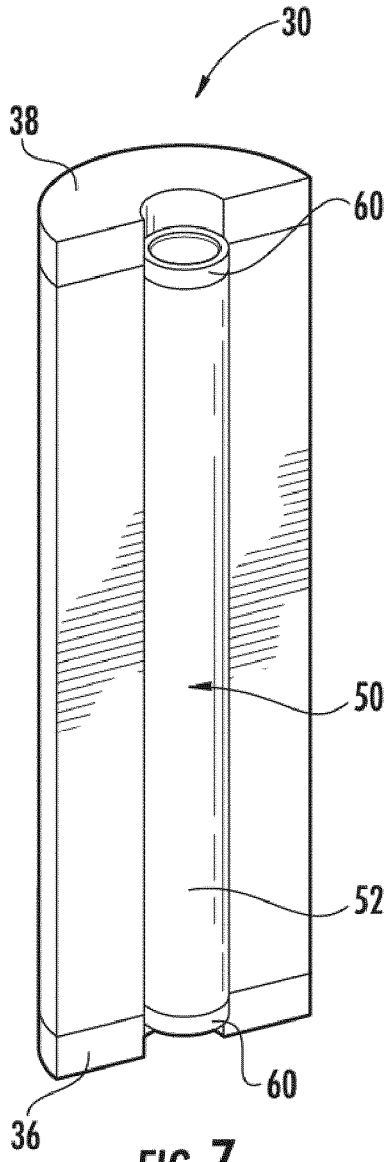

FIG. 7

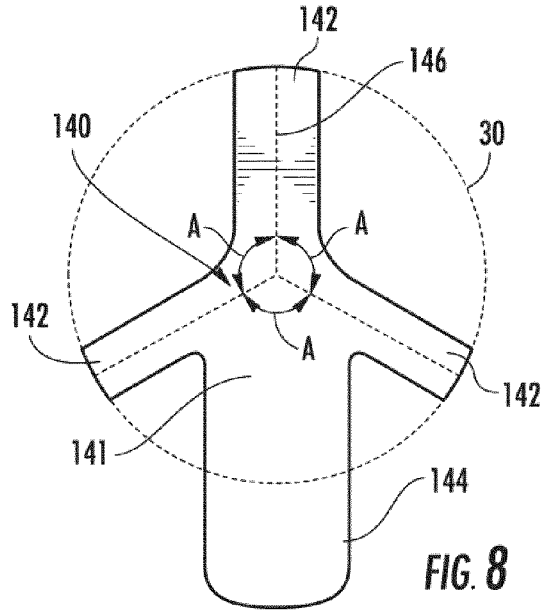

FIG. 8

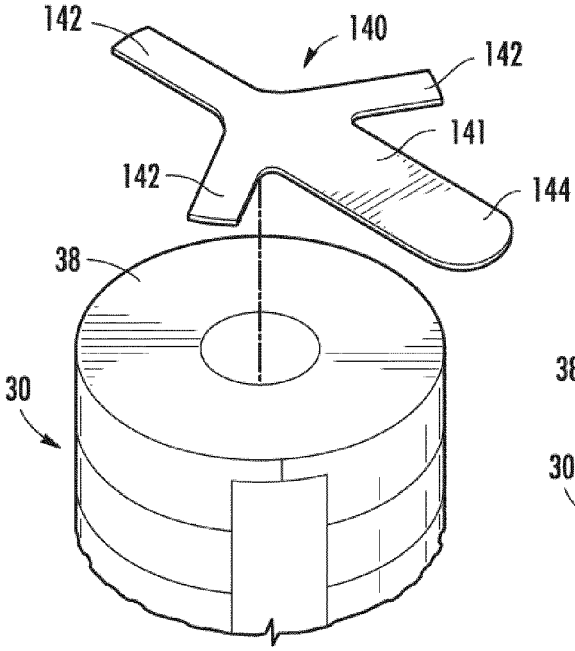

FIG. 9

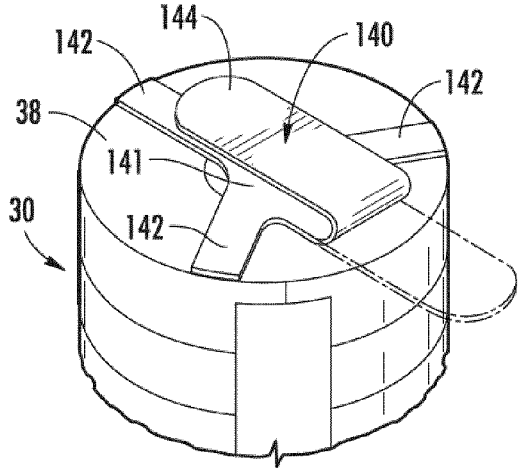

FIG. 9A

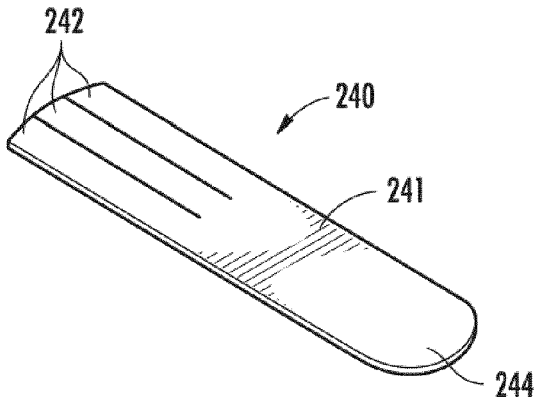

FIG. 10

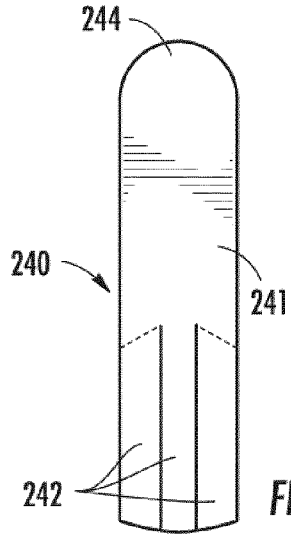

FIG. 11

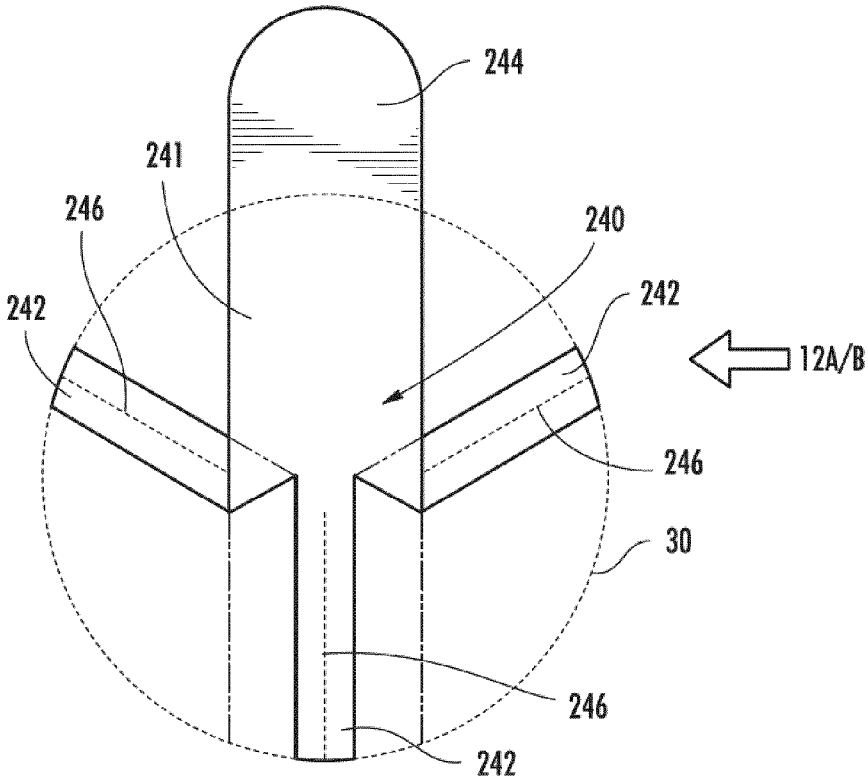

FIG. 12

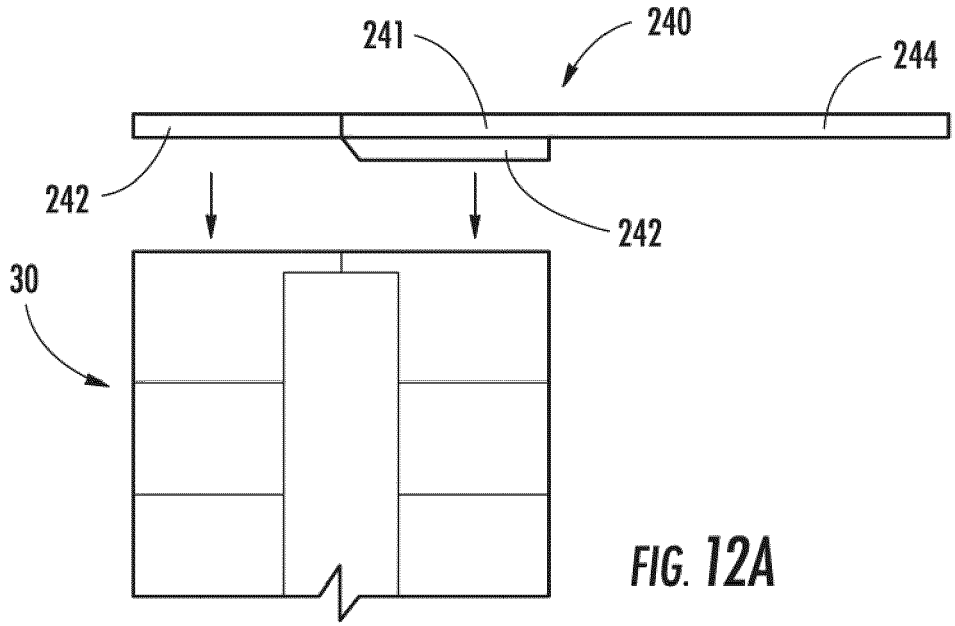

FIG. 12A

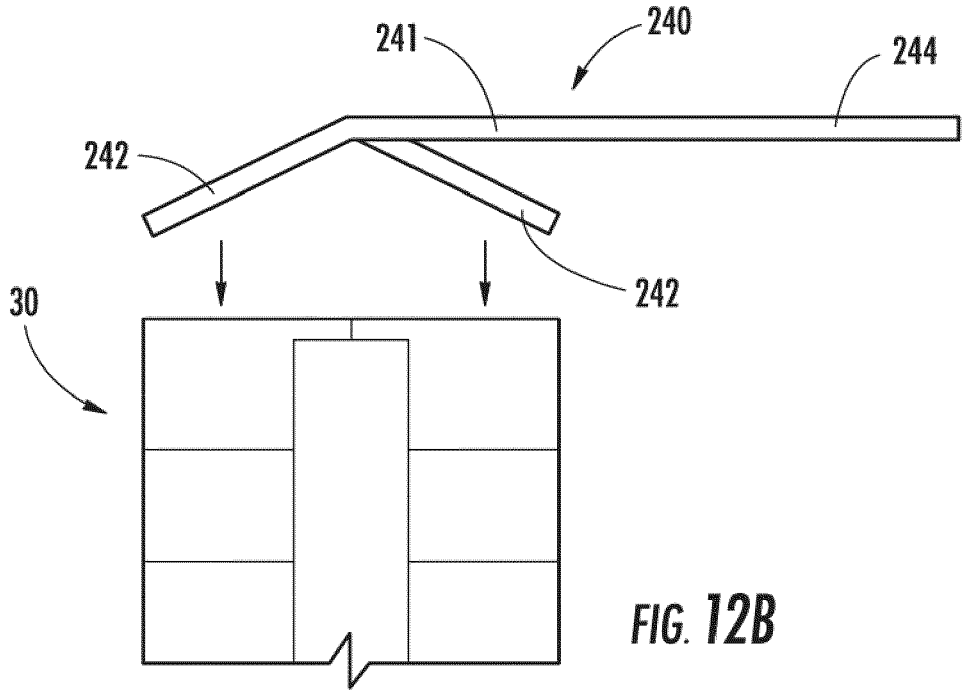

FIG. 12B

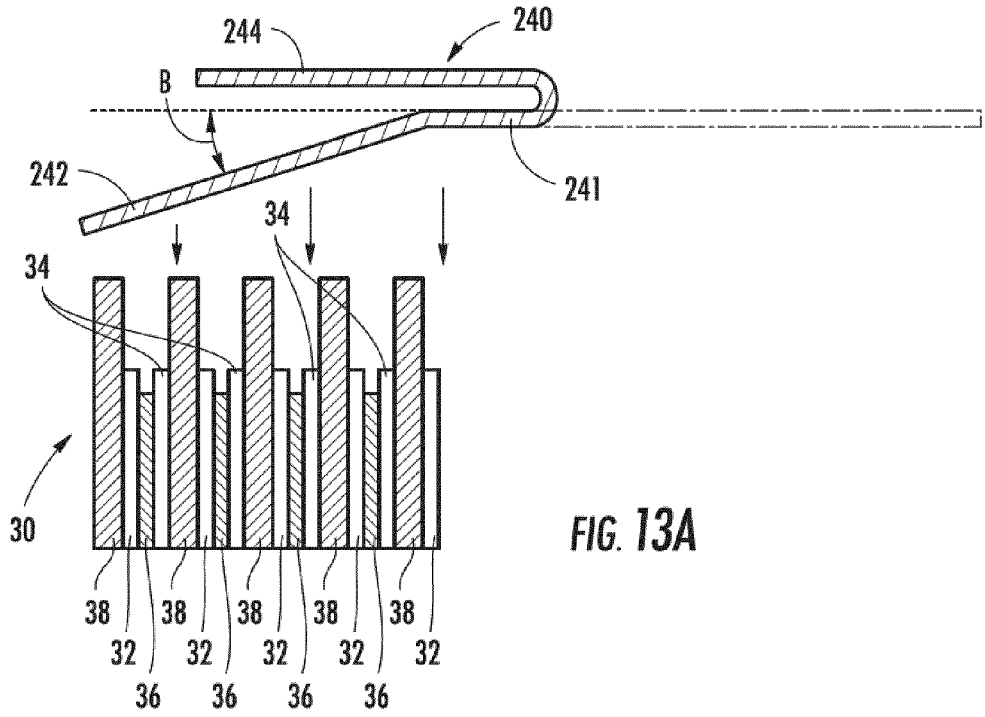

FIG. 13A

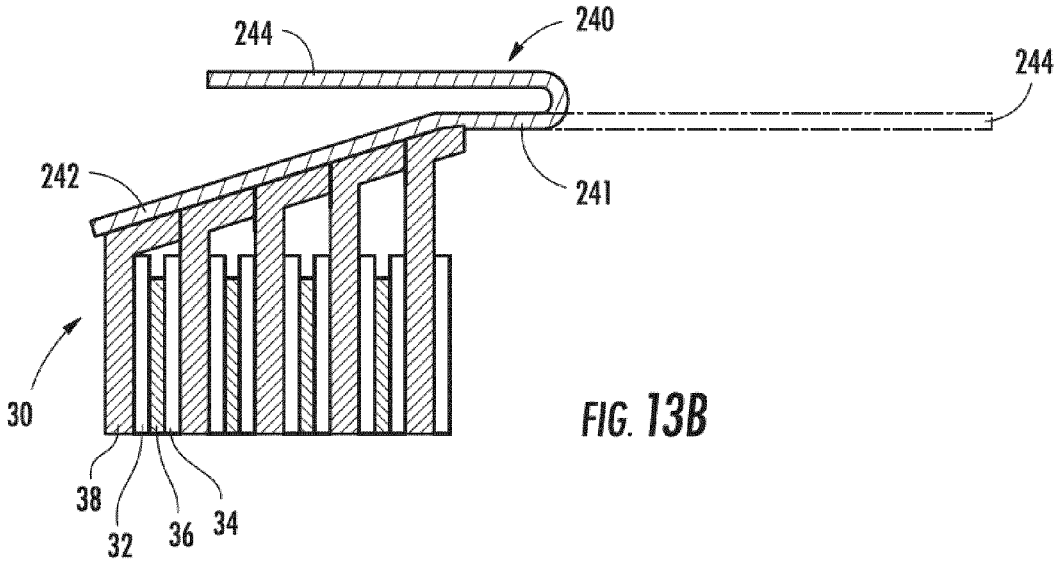

FIG. 13B

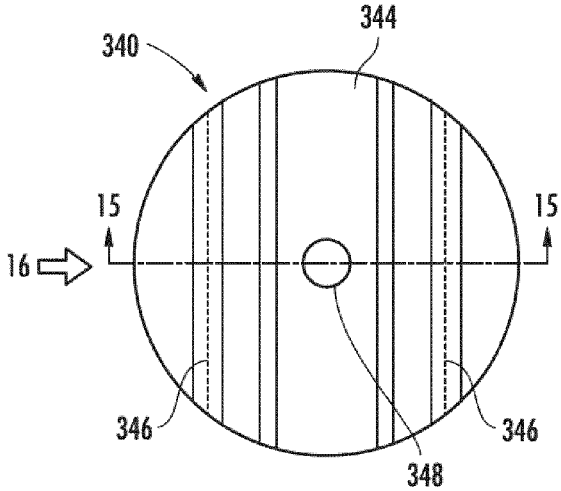

FIG. 14

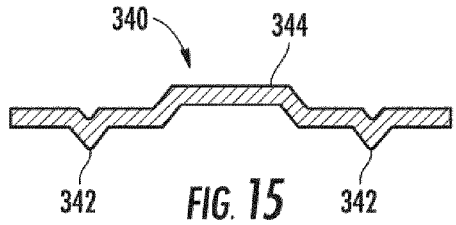

FIG. 15

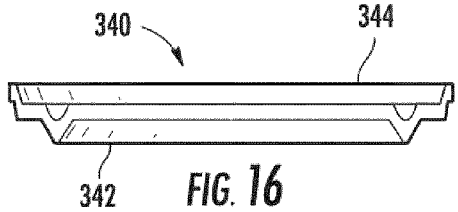

FIG. 16

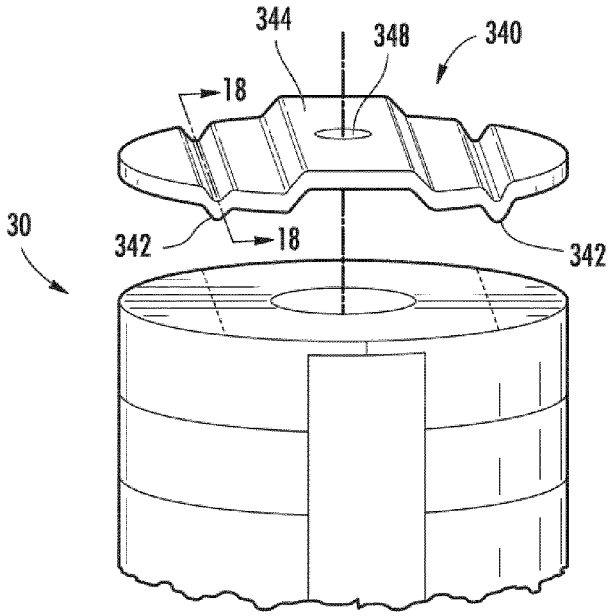

FIG. 17

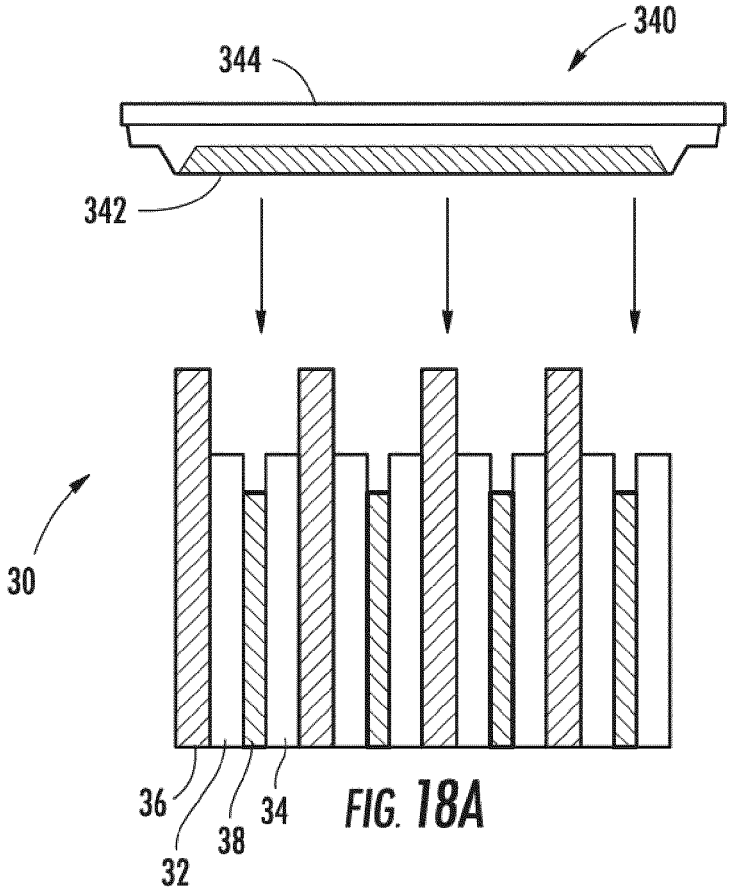

FIG. 18A

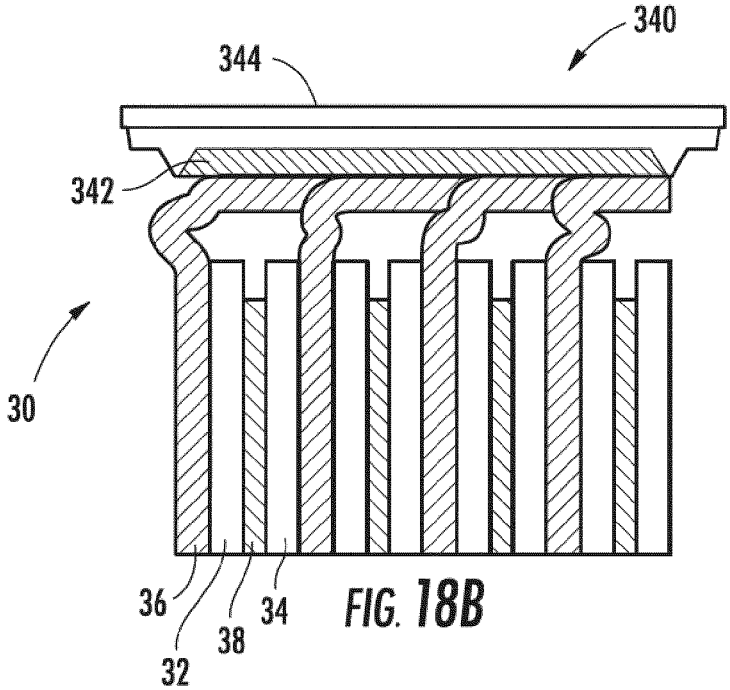

FIG. 18B

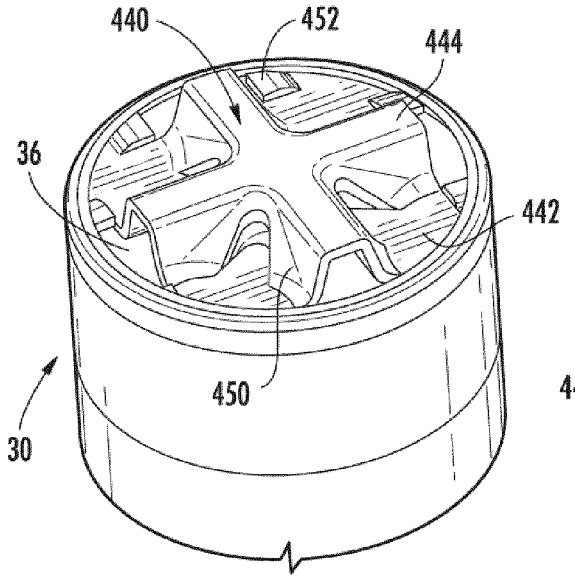

FIG. 19

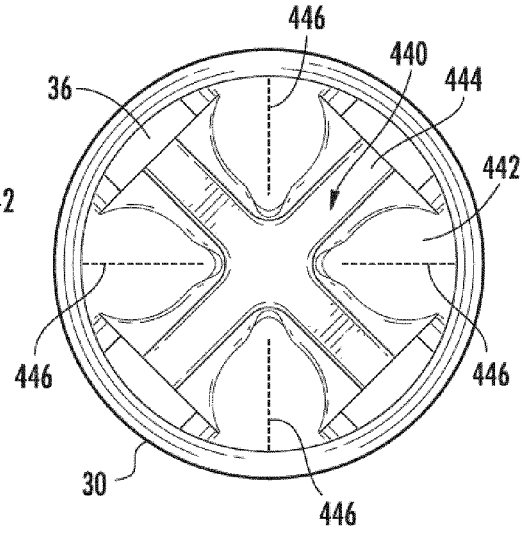

FIG. 19A

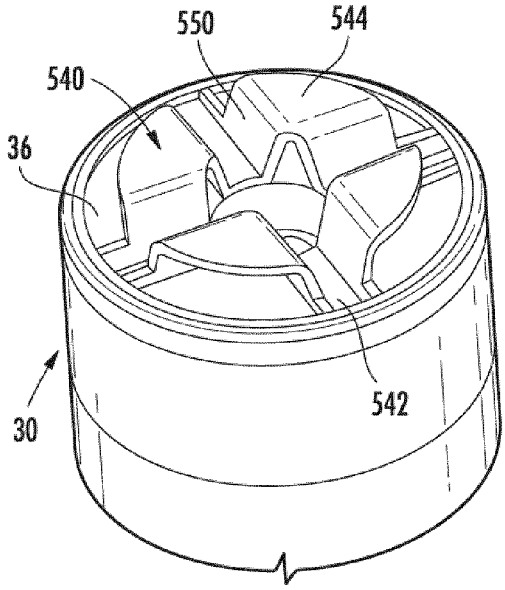

FIG. 20

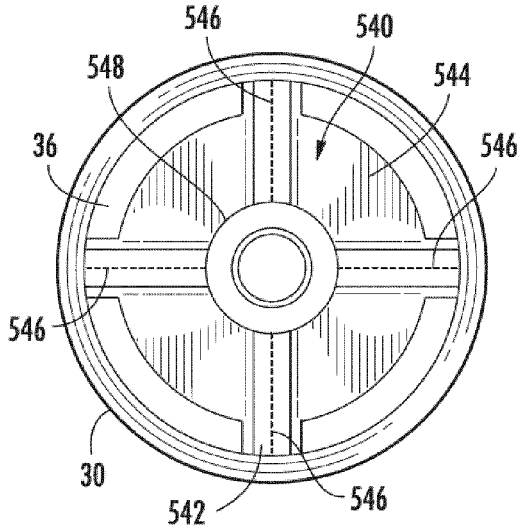

FIG. 20A

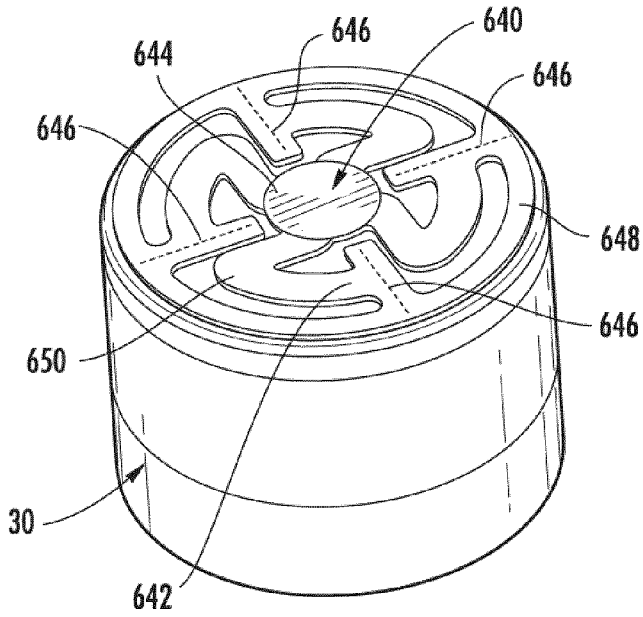

FIG. 21

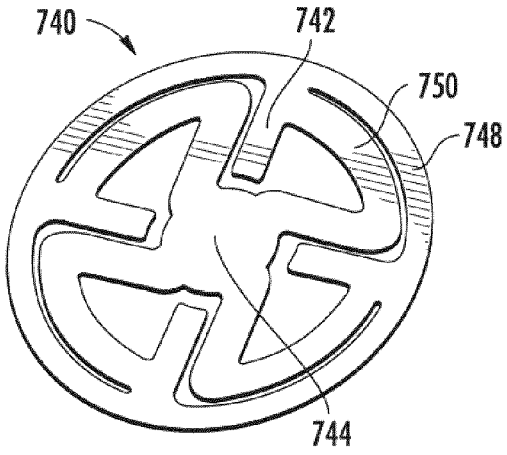

FIG. 22

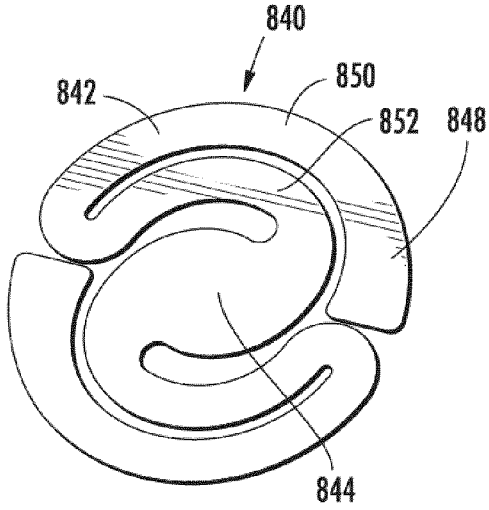

FIG. 23

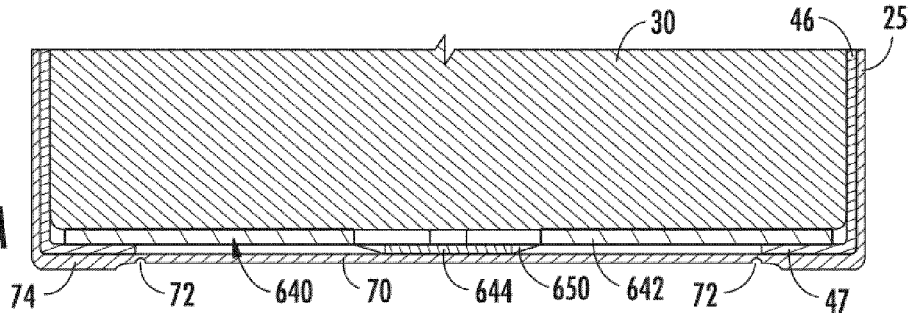

FIG. 24A

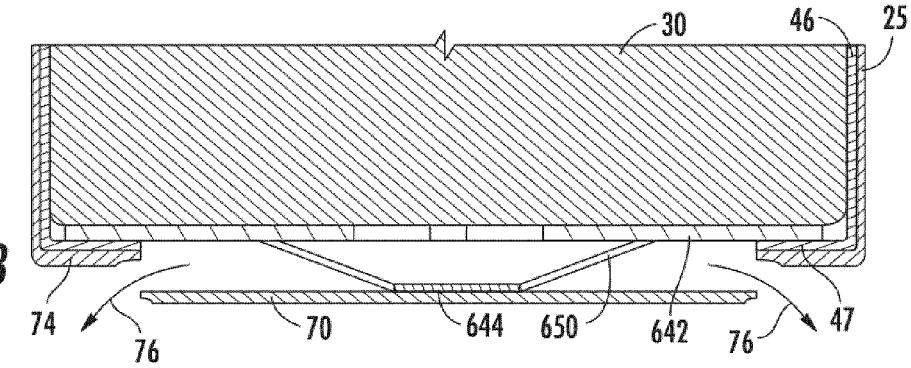

FIG. 24B

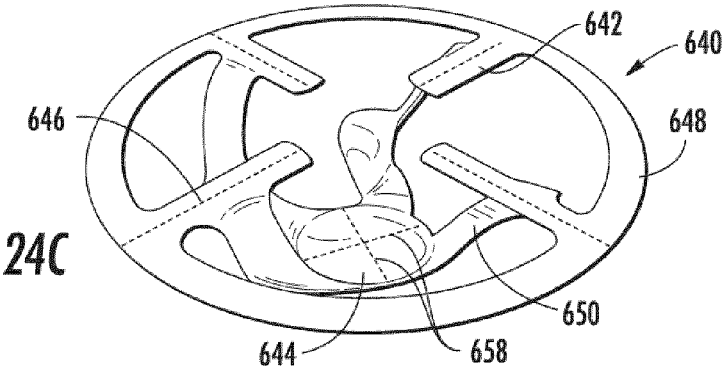

FIG. 24C

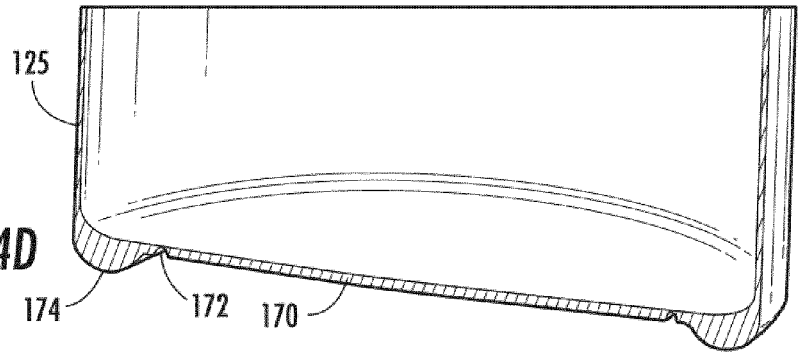

FIG. 24D

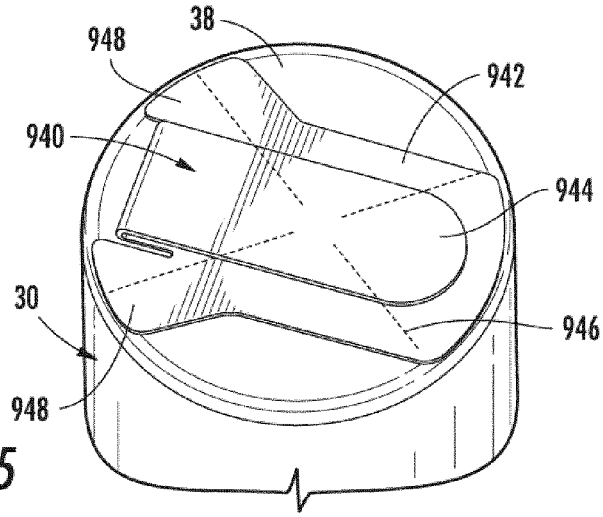

FIG. 25

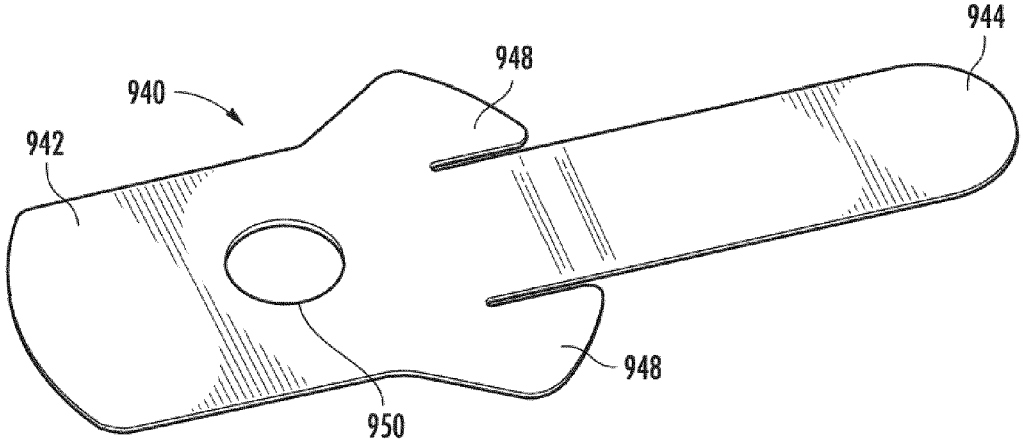

FIG. 26

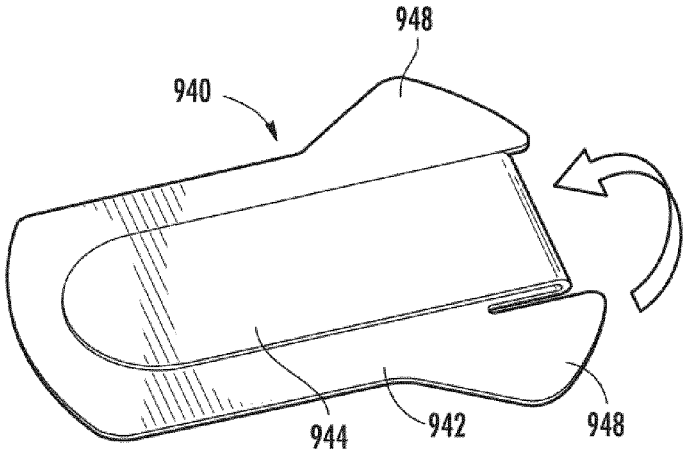

FIG. 27

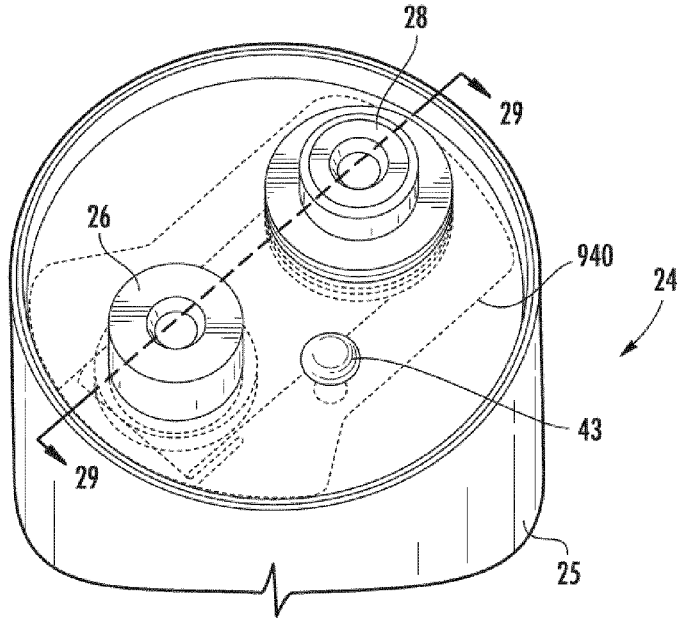

FIG. 28

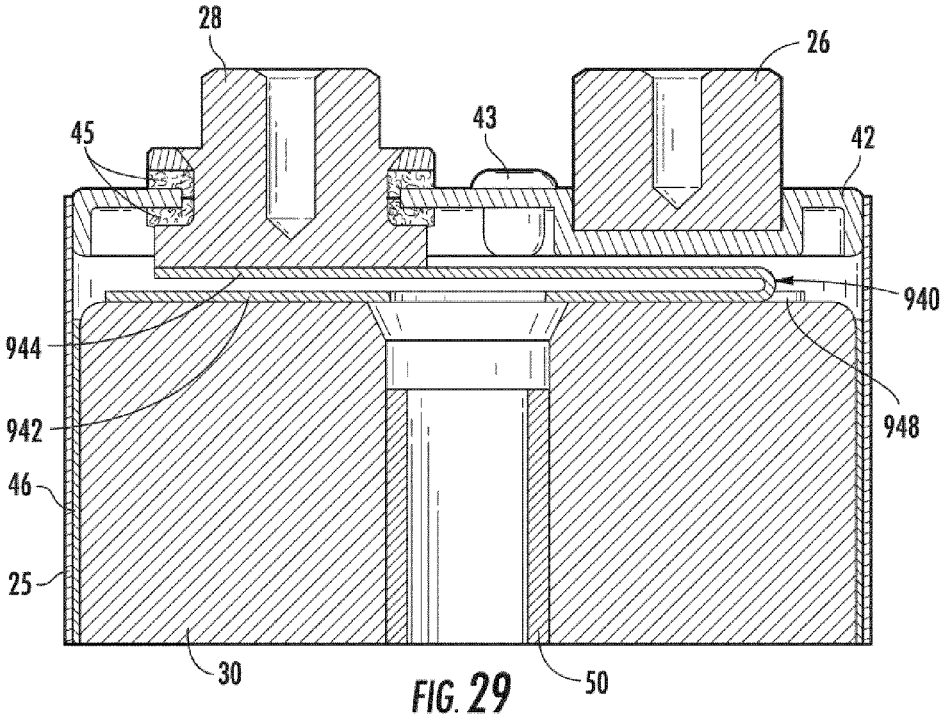

FIG. 29

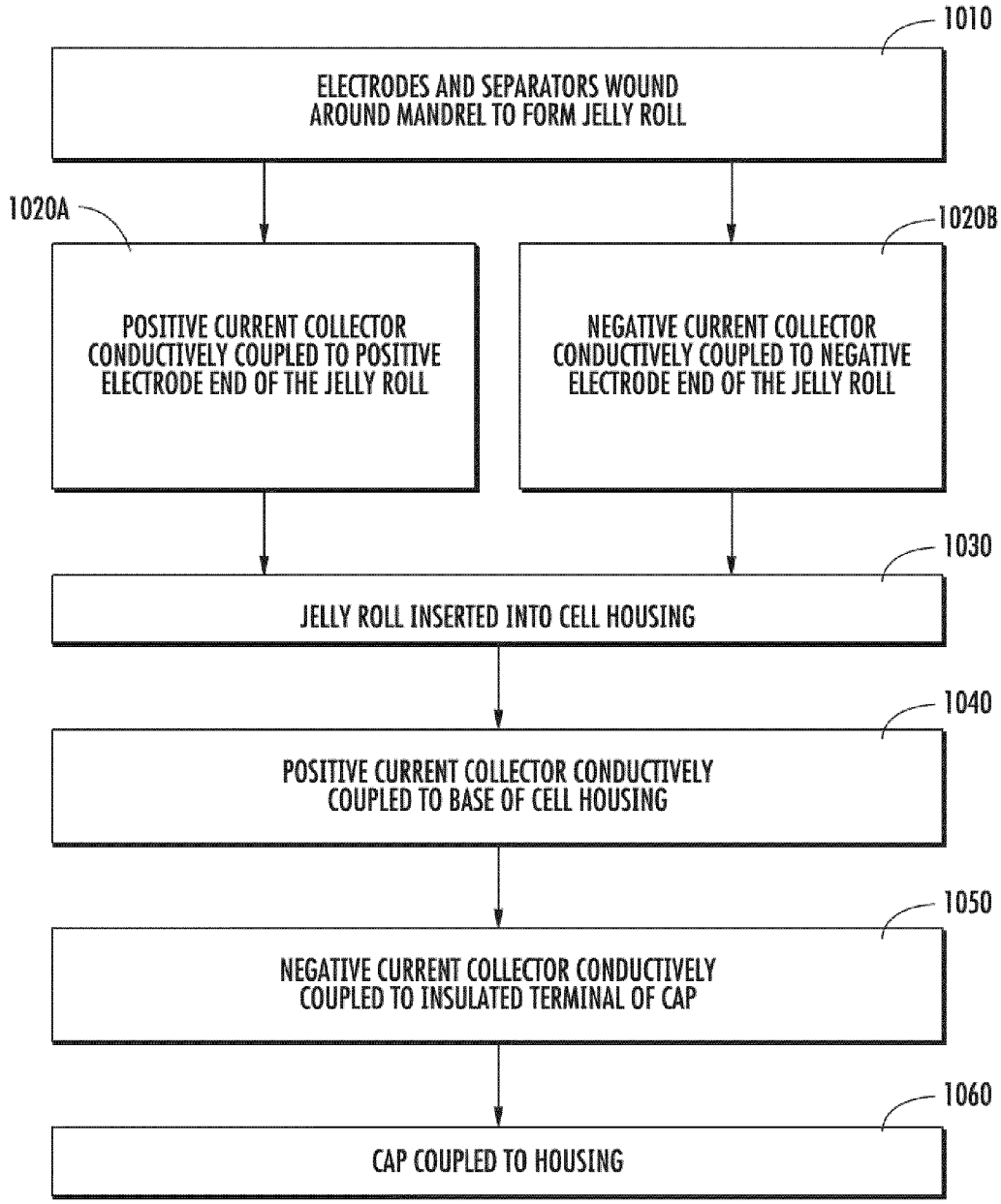
1010
ELECTRODES AND SEPARATORS WOUND AROUND MANDREL TO FORM JELLY ROLL
1020A
POSITIVE CURRENT COLLECTOR CONDUCTIVELY COUPLED TO POSITIVE ELECTRODE END OF THE JELLY ROLL
1020B
NEGATIVE CURRENT COLLECTOR CONDUCTIVELY COUPLED TO NEGATIVE ELECTRODE END OF THE JELLY ROLL
1030
JELLY ROLL INSERTED INTO CELL HOUSING
1040
POSITIVE CURRENT COLLECTOR CONDUCTIVELY COUPLED TO BASE OF CELL HOUSING
1050
NEGATIVE CURRENT COLLECTOR CONDUCTIVELY COUPLED TO INSULATED TERMINAL OF CAP
1060
CAP COUPLED TO HOUSING

FIG. 30

CURRENT COLLECTOR FOR AN ELECTROCHEMICAL CELL

CROSS-REFERENCE TO RELATED PATENT APPLICATIONS

[0001] This application is a continuation of International Patent Application No. PCT/US2009/065365, filed Nov. 20, 2009, which claims the benefit of and priority to U.S. Provisional Patent Application No. 61/116,993, filed Nov. 21, 2008 and U.S. Provisional Patent Application No. 61/172,148, filed Apr. 23, 2009. The entire disclosures of International Patent Application No. PCT/US2009/065365, U.S. Provisional Patent Application No. 61/116,993, and U.S. Provisional Patent Application No. 61/172,148 are incorporated herein by reference in their entireties.

BACKGROUND

[0002] The present application relates generally to the field of batteries and battery systems. More specifically, the present application relates to batteries and battery systems that may be used in vehicle applications to provide at least a portion of the motive power for the vehicle.

[0003] Vehicles using electric power for all or a portion of their motive power (e.g., electric vehicles (EVs), hybrid electric vehicles (HEVs), plug-in hybrid electric vehicles (PHEVs), and the like, collectively referred to as "electric vehicles") may provide a number of advantages as compared to more traditional gas-powered vehicles using internal combustion engines. For example, electric vehicles may produce fewer undesirable emission products and may exhibit greater fuel efficiency as compared to vehicles using internal combustion engines (and, in some cases, such vehicles may eliminate the use of gasoline entirely, as is the case of certain types of PHEVs).

[0004] As electric vehicle technology continues to evolve, there is a need to provide improved power sources (e.g., battery systems or modules) for such vehicles. For example, it is desirable to increase the distance that such vehicles may travel without the need to recharge the batteries. It is also desirable to improve the performance of such batteries and to reduce the cost associated with the battery systems.

[0005] One area of improvement that continues to develop is in the area of battery chemistry. Early electric vehicle systems employed nickel-metal-hydride (NiMH) batteries as a propulsion source. Over time, different additives and modifications have improved the performance, reliability, and utility of NiMH batteries.

[0006] More recently, manufacturers have begun to develop lithium-ion batteries that may be used in electric vehicles. There are several advantages associated with using lithium-ion batteries for vehicle applications. For example, lithium-ion batteries have a higher charge density and specific power than NiMH batteries. Stated another way, lithium-ion batteries may be smaller than NiMH batteries while storing the same amount of charge, which may allow for weight and space savings in the electric vehicle (or, alternatively, this feature may allow manufacturers to provide a greater amount of power for the vehicle without increasing the weight of the vehicle or the space taken up by the battery system).

[0007] It is generally known that lithium-ion batteries perform differently than NiMH batteries and may present design and engineering challenges that differ from those presented with NiMH battery technology. For example, lithium-ion batteries may be more susceptible to variations in battery temperature than comparable NiMH batteries, and thus systems may be used to regulate the temperatures of the lithium-ion batteries during vehicle operation. The manufacture of lithium-ion batteries also presents challenges unique to this battery chemistry, and new methods and systems are being developed to address such challenges.

[0008] It would be desirable to provide an improved battery module and/or system for use in electric vehicles that addresses one or more challenges associated with NiMH and/or lithium-ion battery systems used in such vehicles. It also would be desirable to provide a battery module and/or system that includes any one or more of the advantageous features that will be apparent from a review of the present disclosure.

SUMMARY

[0009] One exemplary embodiment relates to a current collector for an electrochemical cell including a member having an outer member and an inner member coupled to the outer member by a plurality of flexible arms configured to allow the inner member to move relative to the outer member.

[0010] Another exemplary embodiment relates to flexible current collector for an electrochemical cell. The current collector includes an outer portion, and inner portion, and a plurality of connecting members. Each of the connecting members has a first end coupled to the outer portion and a second end coupled to the inner portion. The connecting members are configured to allow the inner portion to move relative to the outer portion.

[0011] Another exemplary embodiment relates to an electrochemical cell including a current collector including a member having an outer member and an inner member coupled to the outer member by a plurality of flexible arms configured to allow the inner member to move relative to the outer member.

BRIEF DESCRIPTION OF THE DRAWINGS

[0012] FIG. **1** is a perspective view of a vehicle including a battery module according to an exemplary embodiment.

[0013] FIG. **2** is a cutaway schematic view of a vehicle including a battery module according to an exemplary embodiment.

[0014] FIG. **3** is a perspective view of an electrochemical cell according to an exemplary embodiment.

[0015] FIG. **4** is a partial cross-sectional view of the electrochemical cell shown in FIG. **3** taken along line **4-4** in FIG. **3**.

[0016] FIG. **5** is a partial cross-sectional view of electrodes and separators for an electrochemical cell according to an exemplary embodiment.

[0017] FIG. **6** is a perspective view of a cell element provided in the form of a jelly roll configuration according to an exemplary embodiment.

[0018] FIG. **7** is a cross-sectional view of the cell element shown in FIG. **6** taken along line **7-7** in FIG. **6**.

[0019] FIG. **8** is a top view of a current collector coupled to a cell element according to an exemplary embodiment.

[0020] FIG. **9** is an exploded perspective view of the current collector and cell element shown in FIG. **8**.

[0021] FIG. **9**A is a perspective view of the current collector shown in FIG. **9** coupled to the cell element shown in FIG.

9 with a tab of the current collector having been folded according to an exemplary embodiment.

[0022] FIG. **10** is a perspective view of a current collector according to another exemplary embodiment.

[0023] FIG. **11** is a top view of the current collector shown in FIG. **10**.

[0024] FIG. **12** is a top view of the current collector shown in FIG. **10** shown coupled to a cell element according to an exemplary embodiment.

[0025] FIG. **12**A is an exploded side view of the current collector and cell element shown in FIG. **12** according to an exemplary embodiment.

[0026] FIG. **12**B is an exploded side view of the current collector and cell element shown in FIG. **12** according to another exemplary embodiment.

[0027] FIG. **13**A is a partial cross-sectional schematic view of the current collector and cell element shown in FIG. **12**B with a tab of the current collector having been folded according to an exemplary embodiment.

[0028] FIG. **13**B is a partial cross-sectional schematic view of the current collector shown in FIG. **13**A coupled to the cell element shown in FIG. **13**A according to an exemplary embodiment.

[0029] FIG. **14** is a top view of a current collector according to another exemplary embodiment.

[0030] FIG. **15** is a cross-sectional view of the current collector shown in FIG. **14** taken along lines **15-15** in FIG. **14**.

[0031] FIG. **16** is a side view of the current collector shown in FIG. **14**.

[0032] FIG. **17** is a perspective view of the current collector shown in FIG. **14** being coupled to a cell element according to an exemplary embodiment.

[0033] FIG. **18**A is a partial cross-sectional schematic view of the current collector and cell element shown in FIG. **17** taken along line **18-18** in FIG. **17**.

[0034] FIG. **18**B is a partial cross-sectional schematic view of the current collector shown in FIG. **18**A coupled to the cell element shown in FIG. **18**A according to an exemplary embodiment.

[0035] FIG. **19** is a perspective view of a current collector coupled to a cell element according to another exemplary embodiment.

[0036] FIG. **19**A is a top view of the current collector shown in FIG. **19**.

[0037] FIG. **20** is a perspective view of a current collector coupled to a cell element according to another exemplary embodiment.

[0038] FIG. **20**A is a top view of the current collector shown in FIG. **20**.

[0039] FIG. **21** is a perspective view of a current collector coupled to a cell element according to another exemplary embodiment.

[0040] FIGS. **22-23** are perspective views of current collectors according to other exemplary embodiments.

[0041] FIG. **24**A is a partial cross-sectional view of a cell having a flexible current collector according to an exemplary embodiment.

[0042] FIG. **24**B is a partial cross-sectional view of the cell having a flexible current collector shown in FIG. **24**A after a vent has been deployed according to an exemplary embodiment.

[0043] FIG. **24**C is a perspective view of the flexible current collector shown in FIG. **24**B according to an exemplary embodiment.

[0044] FIG. **24**D is a perspective view of a housing for the electrochemical cell shown in FIG. **24** according to another exemplary embodiment.

[0045] FIGS. **25-27** are various perspective views of a current collector according to another exemplary embodiment.

[0046] FIG. **28** is a perspective view of the current collector shown in FIGS. **25-27** provided in an electrochemical cell according to an exemplary embodiment.

[0047] FIG. **29** is a cross-sectional view of the electrochemical cell shown in FIG. **28** taken along lines **29-29** in FIG. **28**.

[0048] FIG. **30** is a flow diagram of a method of manufacturing an electrochemical cell according to an exemplary embodiment.

DETAILED DESCRIPTION

[0049] FIG. **1** is a perspective view of a vehicle **10** in the form of an automobile (e.g., a car) having a battery system **20** for providing all or a portion of the motive power for the vehicle **10**. Such a vehicle **10** can be an electric vehicle (EV), a hybrid electric vehicle (HEV), a plug-in hybrid electric vehicle (PHEV), or other type of vehicle using electric power for propulsion (collectively referred to as "electric vehicles").

[0050] Although the vehicle **10** is illustrated as a car in FIG. **1**, the type of vehicle may differ according to other exemplary embodiments, all of which are intended to fall within the scope of the present disclosure. For example, the vehicle **10** may be a truck, bus, industrial vehicle, motorcycle, recreational vehicle, boat, or any other type of vehicle that may benefit from the use of electric power for all or a portion of its propulsion power.

[0051] Although the battery system **20** is illustrated in FIG. **1** as being positioned in the trunk or rear of the vehicle, according to other exemplary embodiments, the location of the battery system **20** may differ. For example, the position of the battery system **20** may be selected based on the available space within a vehicle, the desired weight balance of the vehicle, the location of other components used with the battery system **20** (e.g., battery management systems, vents or cooling devices, etc.), and a variety of other considerations.

[0052] FIG. **2** illustrates a cutaway schematic view of a vehicle **11** provided in the form of an HEV according to an exemplary embodiment. A battery system **21** is provided toward the rear of the vehicle **11** proximate a fuel tank **12** (the battery system **21** may be provided immediately adjacent the fuel tank **12** or may be provided in a separate compartment in the rear of the vehicle **11** (e.g., a trunk) or may be provided elsewhere in the vehicle **11**). An internal combustion engine **14** is provided for times when the vehicle **11** utilizes gasoline power to propel the vehicle **11**. An electric motor **16**, a power split device **17**, and a generator **18** are also provided as part of the vehicle drive system.

[0053] Such a vehicle **11** may be powered or driven by just the battery system **21**, by just the engine **14**, or by both the battery system **21** and the engine **14**. It should be noted that other types of vehicles and configurations for the vehicle drive system may be used according to other exemplary embodiments, and that the schematic illustration of FIG. **2** should not be considered to limit the scope of the subject matter described in the present application.

[0054] According to various exemplary embodiments, the size, shape, and location of the battery system **21**, the type of vehicle **11**, the type of vehicle technology (e.g., EV, HEV,

PHEV, etc.), and the battery chemistry, among other features, may differ from those shown or described.

[0055] According to an exemplary embodiment, the battery system **21** includes a plurality of electrochemical batteries or cells. The battery system **21** may also include features or components for connecting the electrochemical cells to each other and/or to other components of the vehicle electrical system, and also for regulating the electrochemical cells and other features of the battery system **21**. For example, the battery system **21** may include features that are responsible for monitoring and controlling the electrical performance of the battery system **21**, managing the thermal behavior of the battery system **21**, containment and/or routing of effluent (e.g., gases that may be vented from an electrochemical cell through a vent), and other aspects of the battery system **21**.

[0056] Referring now to FIG. **3**, an isometric view of an electrochemical cell **24** is shown according to an exemplary embodiment. A battery system (such as battery system **20**, **21**) includes a plurality of such electrochemical cells **24** (e.g., lithium-ion cells, nickel-metal-hydride cells, lithium polymer cells, etc., or other types of electrochemical cells now known or hereafter developed). According to an exemplary embodiment, the electrochemical cells **24** are generally cylindrical lithium-ion cells configured to store an electrical charge. According to other exemplary embodiments, the cells **24** could have other physical configurations (e.g., oval, prismatic, polygonal, etc.). The capacity, size, design, terminal configuration, and other features of the cells **24** may also differ from those shown according to other exemplary embodiments.

[0057] FIG. **4** is a partial cross-sectional view of a cell **24** such as that shown in FIG. **3** taken along line **4-4** in FIG. **3**. According to an exemplary embodiment, the cell **24** includes a container or housing **25**, a cap or cover **42**, a bottom portion (not shown), and a cell element **30**. According to an exemplary embodiment, the housing **25** may be constructed from a conductive material such as a metal (e.g., aluminum or an aluminum alloy, copper or a copper alloy, etc.). According to an exemplary embodiment, the cell element **30** is a wound cell element. According to another exemplary embodiment, the cell element **30** may be a prismatic or oval cell element.

[0058] According to an exemplary embodiment, the cell element **30** includes at least one cathode or positive electrode **36**, at least one anode or negative electrode **38**, and one or more separators **32**, **34**. The separators **32**, **34** are provided intermediate or between the positive and negative electrodes **36**, **38** to electrically isolate the electrodes **36**, **38** from each other. According to an exemplary embodiment, the cell **24** includes an electrolyte (not shown). According to an exemplary embodiment, the electrolyte is provided in the housing **25** of the cell **24** through a fill hole **41**. After completion of filling the cell **24** with electrolyte, a fill plug (e.g., such as fill plug **43** as shown in FIGS. **28** and **29**) may be provided in the fill hole **41** to seal the electrolyte inside the cell **24**.

[0059] The cell **24** also includes a negative current collector **40** and a positive current collector (not shown). The negative current collector **40** and the positive current collector are conductive members that are used to couple the electrodes **36**, **38** of the cell element **30** to the terminals **26**, **28** of the cell **24**. For example, the negative current collector **40** couples the negative electrode **38** to the negative terminal **28** (via a tab **44**) and the positive current collector couples the positive electrode **36** to the positive terminal **26** of the cell **24** (e.g., via the housing **25**). According to the exemplary embodiment shown in FIG. **4**, the tab **44** of the negative current collector **40** has been at least partially folded or bent back over itself at least one time before being coupled to the negative terminal **28**. According to an exemplary embodiment, the current collectors are coupled to the electrodes with a welding operation (e.g., a laser welding operation).

[0060] According to an exemplary embodiment, the cell element **30** has a wound configuration in which the electrodes **36**, **38** and separators **32**, **34** are wound around a member or element provided in the form of a tube or mandrel **50**. Such a configuration may be referred to alternatively as a jelly roll configuration. Although the mandrel **50** is shown as being provided as having a generally cylindrical shape, according to other exemplary embodiments, the mandrel **50** may have a different configuration (e.g., it may have an oval or rectangular cross-sectional shape, etc.). It is noted that the cell element **30**, although shown as having a generally cylindrical shape, may also have a different configuration (e.g., it may have an oval, prismatic, rectangular, or other desired cross-sectional shape).

[0061] According to another exemplary embodiment, the electrochemical cell **24** may be a prismatic cell having prismatic or stacked cell elements (not shown). In such an embodiment, the positive and negative electrodes **36**, **38** are provided as plates that are stacked upon one another in an alternating fashion, with the separators **32**, **34** provided intermediate or between the positive and negative electrodes **36**, **38** to electrically isolate the electrodes **36**, **38** from each other.

[0062] According to an exemplary embodiment, the positive electrode **36** is offset from the negative electrode **38** in the axial direction as shown in the partial cross-sectional view shown in FIG. **5**. Accordingly, at a first end of the cell element **30**, the wound positive electrode **36** will extend further than the negative electrode **38**, and at a second (opposite) end of the cell element **30**, the negative electrode **38** will extend further than the positive electrode **36**.

[0063] One advantageous feature of such a configuration is that current collectors may be connected to a specific electrode at one end of the cell **24** without contacting the opposite polarity electrode. For example, according to an exemplary embodiment, a negative current collector **40** (e.g., as shown in FIG. **4**) may be connected to the exposed negative electrode **38** at one end of the cell element **30** and a positive current collector (not shown) may be connected to the exposed positive electrode **36** at the opposite end of the cell element **30**.

[0064] According to an exemplary embodiment, the negative current collector **40** electrically connects the negative electrode **38** to the negative terminal **28** of the cell **24**. The negative terminal **28** is insulated from the cover **42** of the housing **25** by an insulator **45**, as shown in FIG. **4**. According to an exemplary embodiment, the positive current collector (not shown) electrically connects the positive electrode **36** to a bottom of the housing **25**. The housing **25** is electrically connected to the cover **42** (e.g., as shown in FIG. **4**), which in turn is electrically connected to the positive terminal **26**.

[0065] FIGS. **6-7** illustrate an exemplary embodiment of a wound cell element **30** (e.g., a jelly roll) in which electrodes **36**, **38** and separators **32**, **34** (not shown) are wound around a member or element provided in the form of a mandrel **50** (e.g., a body, center member, shaft, rod, tube etc.). According to an exemplary embodiment, an adhesive or tape **48** (e.g., as shown in FIG. **6**) may be used to position an electrically-insulating wrap or film **46** (e.g., as shown in FIGS. **4** and **6**) around the cell element **30** in order to at least partially elec-

trically insulate the cell element **30** from the housing **25**. According to an exemplary embodiment, the film **46** is a polymide material such as is commercially available under the trade name Kapton® from E. I. du Pont de Nemours and Company.

[0066] According to an exemplary embodiment, the mandrel **50** is provided in the form of an elongated hollow tube **52** and is configured to allow gases from inside the electrochemical cell to flow from one end of the electrochemical cell (e.g., the top) to the other end of the electrochemical cell (e.g., the bottom). According to another exemplary embodiment, the mandrel **50** may be provided as a solid tube.

[0067] The mandrel **50** is illustrated, for example, in FIG. **7** as being provided within the center of the cell element **30**. According to an exemplary embodiment, the mandrel **50** does not extend all the way to the very top and bottom of the cell element **30**. According to other exemplary embodiments, the mandrel **50** may extend all the way to the top and/or bottom of the cell element **30**.

[0068] Still referring to FIGS. **6-7**, according to an exemplary embodiment, the mandrel **50** includes at least one (i.e., one or more) element or drive member **60** joined to an end of the hollow tube **52**. According to an exemplary embodiment, the drive members **60** are configured to electrically insulate the hollow tube **52** from the electrodes **36**, **38**. According to another exemplary embodiment, the hollow tube **52** may be provided in electrical contact with one of the electrodes while being electrically insulated from the other electrode. For example, according to an exemplary embodiment, the hollow tube **52** may be electrically coupled to the positive electrode **36** (or negative electrode **38**), while the hollow tube **52** is electrically isolated from the negative electrode **38** (or positive electrode **36**) by the drive member **60**.

[0069] According to an exemplary embodiment, the drive members **60** are formed from an electrically-insulating material such as a polymeric material or other suitable material (e.g., a plastic resin) and the hollow tube **52** is formed from an electrically (and thermally) conductive material such as a metallic material or other suitable material (e.g., aluminum or aluminum alloy). According to another exemplary embodiment, the drive members **60** are formed from an electrically (and thermally) conductive material such as a metallic material or other suitable material (e.g., aluminum or aluminum alloy) and the hollow tube **52** is formed from an electrically-insulating material such as a polymeric material or other suitable material (e.g., a plastic resin). According to another exemplary embodiment, both the drive members **60** and the hollow tube **52** are formed from an electrically-insulating material such as a polymeric material or other suitable material (e.g., a plastic resin).

[0070] One advantageous feature of the mandrels **50** as described above is that the drive members **60** coupled to the hollow tube **52** keep the positive and negative electrodes **36**, **38** electrically separated from each other. Additionally, when the hollow tube **52** of the mandrel **50** is formed from a relatively low cost material (e.g., a drawn aluminum tube or extruded aluminum tube), the mandrel **50** may have a lower cost as compared to other mandrels in which the entire assembly is made of a polymeric material.

[0071] According to other exemplary embodiments, other configurations of the cell element **30** may be used that do not include the mandrel **50** or the drive members **60** (e.g., a prismatic cell element). Additionally, while the cell **24** in FIGS. **4** and **6** is shown according to an exemplary embodiment as having the exposed negative electrode **38** proximate to the top of the cell **24** and the exposed positive electrode **36** proximate to the bottom of the cell **24**, according to other exemplary embodiments, the orientation of the cell element **30** (and thus the positions of the current collectors) may be reversed. Additionally, according to other exemplary embodiments, the terminals **26**, **28** of the cell **24** may be provided on opposite ends of the cell **24** (e.g., a negative terminal **28** may be provided on the top of the cell **24** and a positive terminal **26** may be provided on the bottom of the cell **24**).

[0072] Referring now to FIGS. **8-9**A, a member or element provided in the form of a current collector or collector plate **140** is shown according to an exemplary embodiment. According to an exemplary embodiment, the current collector **140** is provided in the form of a generally flat member with a plurality of legs or extensions **142** and an extension or tab **144** (formed, e.g., by a stamping operation, a laser cutting operation, etc.). According to an exemplary embodiment, the current collector **140** may be formed from a material having a thickness of between approximately 1 and 2 millimeters, but may have a greater or lesser thickness according other exemplary embodiments. According to various exemplary embodiments, the current collector **140** may be formed from any of a wide variety of conductive materials such as aluminum or an aluminum alloy (e.g., for a positive current collector), copper or a copper alloy (e.g., for a negative current collector), nickel-plated copper or an alloy thereof, etc.

[0073] As shown, the legs **142** are configured to extend across one end of the cell element **30** to contact the edge of the exposed electrode (e.g., the negative electrode **38**). According to another exemplary embodiment, the legs **142** may extend only partially across the end of the cell element **30**. While three legs **142** are shown in the exemplary embodiment of FIGS. **8-9**A, according to other exemplary embodiments, the current collector **140** may have a greater or lesser number of legs **142**.

[0074] As shown in FIG. **9**A, according to an exemplary embodiment, the extension or tab **144** is configured to be folded away from the cell element **30** and at least partially back over the main body **141** of the current collector **140**. The tab **144** is configured to be coupled to the housing of the cell or to a terminal of the cell to create a conductive path between the electrode and the housing or terminal (e.g., similar to that shown in FIG. **4**). According to another exemplary embodiment, the tab **144** may be folded or bent at least partially over itself multiple times (e.g., similar to that shown in FIG. **4**). The tab **144** provides a substantially flexible connection between the electrode of the cell element **30** and the terminal or housing and allows the cell element **30** to move relative to the terminal or housing if required.

[0075] As best seen in FIG. **8**, the ends of the legs **142** may include a rounded or curved shape to complement the perimeter of the cell element **30**. According to other exemplary embodiments, the legs **142** (including the ends of the legs) may have other shapes and/or sizes. According to an exemplary embodiment, the legs **142** of the current collector are separated from one another by an Angle A of approximately 120 degrees. According to other exemplary embodiments, the legs **142** may be separated from one another by a greater or smaller angle.

[0076] According to an exemplary embodiment, the current collector **140** may be coupled to the electrode with a welding operation (e.g., a laser welding operation) along the legs **142** of the current collector **140** (e.g., such as along weld lines **146**

as shown in FIG. **8**). As such, the welding occurs radially with respect to the end of the cell element **30**. This allows for more efficient current flow from the electrode of the cell element **30** to the current collector **140**, because the edge of the wound electrode is coupled (e.g., welded) to the current collector **140** (via the legs **142**) multiple times. Additionally, radial welds on a wound cell element (such as shown in FIG. **9**) allow the weld to occur substantially perpendicular to the edge of the electrode, providing for better weld control and repeatability of the weld from one cell to the next. According to an exemplary embodiment, the welding of the current collector **140** to the electrode is done prior to the folding of the tab **144**, but may occur at a different time according to other exemplary embodiments.

[0077] Referring now to FIGS. **10-12**B, a current collector **240** is shown according to another exemplary embodiment. The current collector **240** is similar to the current collector **140** of FIGS. **8-9**, except the current collector **240** of FIGS. **10-12**B is formed as a relatively narrow elongated strip of material (to allow for the efficient use of material). According to an exemplary embodiment, the current collector **240** may be formed from a material having a thickness of between approximately 1 and 2 millimeters, but may have a greater or lesser thickness according other exemplary embodiments. According to various exemplary embodiments, the current collector **240** may be formed from any of a wide variety of conductive materials such as aluminum or an aluminum alloy (e.g., for a positive current collector), copper or a copper alloy (e.g., for a negative current collector), nickel-plated copper or an alloy thereof, etc.

[0078] The legs **242** are formed (e.g., by a stamping operation, a laser cutting operation, etc.) by a series of generally parallel cuts at one end of the strip of material in a longitudinal direction. To form the current collector **240**, according to an exemplary embodiment, the outer legs **242** are folded or otherwise manipulated outward at an angle (see FIG. **12**) of approximately 120 degrees from one another. According to other exemplary embodiments, the outer legs may be folded at an angle that is greater or smaller than 120 degrees.

[0079] According to an exemplary embodiment, the legs **242** of the current collector **240** are configured to extend across the end of the electrode of the cell element **30** to contact the edge of the exposed electrode (e.g., the negative electrode or the positive electrode). According to another exemplary embodiment, the legs **242** may extend only partially across the end of the wound electrode. While three legs **242** are shown in the exemplary embodiment of FIGS. **10-12**, according to other exemplary embodiments, the current collector **240** may have a greater or lesser number of legs.

[0080] As shown in FIG. **12**A, according to one exemplary embodiment, the outer legs **242** may be bent or folded under the main body **241** of the current collector **240** such that the outer legs **242** are substantially parallel to the inner leg **242**. As shown in FIG. **12**B, according to another exemplary embodiment, the outer legs **242** may be bent or folded under the main body **241** of the current collector **240** such that the outer legs **242** are at an angle with respect to the plane of the main body **241** (e.g., such as Angle B as shown in FIG. **13**A). Additionally, as shown in FIG. **12**B, the inner leg **242** may be bent or folded towards the cell element **30** such that the inner leg **242** is at an angle with respect to the plane of the main body **241** (e.g., such as Angle B as shown in FIG. **13**A). According to an exemplary embodiment, the inner leg **242** may be bent or folded before, after, or consecutively with the bending or folding of the outer legs **242**.

[0081] The current collector **240** may be coupled to the electrode with a welding operation (e.g., a laser welding operation) along the legs **242** of the current collector **240** (e.g., such as along weld lines **246** as shown in FIG. **12**). As such, the welding occurs radially with respect to the edge of the electrode of the cell element **30**. Similarly to as stated above, radial welding allows for more efficient current flow from the electrode of the cell element **30** to the current collector **240**, and for better weld control and repeatability of the weld from one cell to the next. According to an exemplary embodiment, the welding of the current collector **240** to the electrode is done prior to the folding of the tab **244**, but may occur at a different time according to other exemplary embodiments.

[0082] The current collector **240** also includes an extension or tab **244** that is configured to be folded away from the cell element **30** and/or at least partially back over the main body **241** of the current collector **240** (e.g., such as shown in FIGS. **13**A and **13**B). The tab **244** is configured to be coupled to the housing of the cell or to a terminal of the cell to create a conductive path between the electrode and the housing or terminal (e.g., similar to that as shown in FIG. **4**). According to another exemplary embodiment, the tab **244** may be folded or bent at least partially over itself multiple times (e.g., similar to that as shown in FIG. **4**). The tab **244** provides a substantially flexible connection between the electrode and the terminal or housing and allows the cell element **30** to move relative to the terminal or housing.

[0083] Referring to FIGS. **13**A and **13**B, the inner leg **242** of the current collector **240** may be at an angle with respect to the plane of the tab **244**, shown as Angle B (for clarity, the outer legs **242** are not shown). It is noted that the legs **142** of the current collector **140** (e.g., as shown in FIGS. **8-9**A) may also be at an angle with respect to the plane of the tab (e.g., such as shown in FIGS. **13**A and **13**B). For clarity, only the current collector **240** is discussed below, although one of ordinary skill in the art would know that the embodiment discussed below may also apply to the embodiment shown in FIGS. **8-9**A or other embodiments not discussed.

[0084] Referring to FIGS. **13**A and **13**B, Angle B is chosen so that the legs **242** of the current collector **240** bend or crush the edge or side of the electrode (e.g., the negative electrode **38**) as the legs **242** make contact with the edge of the electrode as the legs **242** are brought down to contact the edge of the electrode (see, e.g., FIG. **13**B). Because the electrodes of the cell element **30** are wound, each of the electrodes will have multiple portions extending from the edge of each electrode. The legs **242** of the current collector **240** may then be coupled to the multiple portions of the edge of the electrode by a welding operation (e.g., a laser welding operation).

[0085] The multiple portions of the edge of the electrode are bent or crushed so that they contact one another to create a substantially continuous surface. The substantially continuous surface allows for better control of the penetration of the weld. By controlling the penetration of the weld, a stronger, higher quality, and more repeatable weld may be formed than is possible with an electrode that hasn't been deformed (e.g., an electrode that hasn't had the multiple portions of the edge of the electrode bent to touch one another). The tab **244** of the current collector **240** is then coupled to the housing of the cell or to the terminal of the cell to create a conductive path between the electrode and the housing or terminal.

[0086] To create a high quality and repeatable weld between the current collector **240** and the electrode, it is desirable for the legs **242** of the current collector **240** to contact as many of the multiple portions of the edge of the electrode as possible. According to an exemplary embodiment, Angle B is between approximately 0 degrees and 30 degrees, but may have an angle that is greater or smaller according to other exemplary embodiments. According to a particular exemplary embodiment, Angle B is between approximately 15 and 25 degrees. According to another particular exemplary embodiment, Angle B is approximately 20 degrees.

[0087] Referring now to FIGS. **14-17**, a member or element provided in the form of a current collector or collector plate **340** is shown according to another exemplary embodiment. According to one exemplary embodiment, the current collector **340** is provided as a disc-like member that includes one or more projections, ridges, or protrusions **342** that extend along one side of the current collector **340**. The protrusions **342** of the current collector **340** have corresponding grooves, valleys, troughs, depressions, etc. on the opposite side of the current collector **340**. According to other exemplary embodiments, the protrusions **342** may not have corresponding grooves, valleys, troughs, depressions, etc. on the opposite side of the current collector **340**. According to one exemplary embodiment, the protrusions **342** are configured to crush or compress the multiple portions of the edge of the exposed electrode (e.g., the positive electrode **36**) at an end of the cell element **30** so that the multiple portions contact one another (e.g., as shown in FIG. **18**B).

[0088] The current collector **340** may be formed (e.g., extruded, stamped, etc.) such that one or more protrusions **342**, shown as generally V-shaped ridges, extend from a surface of the current collector **340**. According to an exemplary embodiment, a tip or edge of the protrusions **342** may have a pointed profile. According to another exemplary embodiment, the tip or edge of the protrusions **342** may have a rounded profile. According to other exemplary embodiments, the protrusions **342** may extend all the way across the current collector **340** (e.g., as shown in FIG. **14**) or may extend only partially across the current collector **340**.

[0089] According to another exemplary embodiment, the current collector **340** may substantially match the size and shape of the end of the cell element **30**. According to other exemplary embodiments, the current collector **340** may be provided in other shapes and/or sizes (e.g., the current collector **340** may cover only a portion of the end of the cell element **30**). According to an exemplary embodiment, the current collector **340** may be formed from a material having a thickness of between approximately **1** and **2** millimeters, but may have a greater or lesser thickness according other exemplary embodiments. According to various exemplary embodiments, the current collector **340** may be formed from any of a wide variety of conductive materials such as aluminum or an aluminum alloy (e.g., for a positive current collector), copper or a copper alloy (e.g., for a negative current collector), nickel-plated copper or an alloy thereof, etc.

[0090] The current collector **340** is coupled to the exposed edge of an electrode (e.g., the positive electrode **36**) of the cell element **30** with a welding operation (e.g., a laser welding operation). According to an exemplary embodiment, the current collector **340** is welded to the electrode along the protrusions **342** of the current collector **340** (e.g., such as along weld lines **346** as shown in FIG. **14**).

[0091] Referring to FIGS. **18**A-**18**B, the protrusions **342** of the current collector **340** are configured to crush, bend, or otherwise deform the multiple portions of the exposed edge of the positive electrode **36** when the current collector **340** is coupled to the cell element **30**. The protrusions **342** cause the multiple portions of the edge of the electrode to contact each other to create a substantially continuous surface. The substantially continuous surface allows for better control of the penetration of the weld. By controlling the penetration of the weld, a stronger, higher quality, and more repeatable weld may be formed than is possible with an electrode that has not been deformed.

[0092] A surface **344** of the current collector **340** is then coupled to the housing of the cell or to the terminal to create a conductive path between the electrode and the housing or terminal. According to an exemplary embodiment, the surface **344** may include a hole or aperture **348** (e.g., as shown in FIG. **17**) that is generally aligned with the center of the cell element **30**.

[0093] Referring now to FIGS. **19** and **19**A, a member or element provided in the form of a current collector or collector plate **440** is shown according to another exemplary embodiment. The current collector **440** may be formed by a stamping operation (e.g., from a sheet metal material). According to an exemplary embodiment, the current collector **440** may be formed from a material having a thickness of between approximately 1 and 2 millimeters, but may have a greater or lesser thickness according other exemplary embodiments. According to various exemplary embodiments, the current collector **440** may be formed from any of a wide variety of conductive materials such as aluminum or an aluminum alloy (e.g., for a positive current collector), copper or a copper alloy (e.g., for a negative current collector), nickel-plated copper or an alloy thereof, etc.

[0094] According to an exemplary embodiment, the current collector **440** includes one or more lower portions **442** that are configured to be coupled to an electrode (e.g., the positive electrode **36**). The current collector **440** also includes one or more upper portions **444** that are configured to be coupled to the housing of the cell or to the terminal of the cell to create a conductive path between the electrode and the housing or terminal. According to the exemplary embodiment shown in FIG. **19**, the current collector **440** includes four lower portions **442** and four upper portions **444**. According to other exemplary embodiments, the current collector **440** may have greater or fewer upper and/or lower portions.

[0095] According to an exemplary embodiment, each of the lower portions **442** are connected to the upper portion by a member shown as a sidewall or shoulder **450**. As shown in FIG. **19**, the shoulders **450** may have a generally rounded profile and may smoothly transition from the lower portion **442** to the upper portion **444**. According to another exemplary embodiment, each of the lower portions **442** includes at least one projection or protrusion **452**.

[0096] According to an exemplary embodiment, the current collector **440** is coupled to exposed portions of the edge of the positive electrode **36** by a welding operation (e.g., a laser welding operation) along the lower portions **442** of the current collector **440** (e.g., such as along weld lines **446** as shown in FIG. **19**A). According to one exemplary embodiment, the lower portions **442** may contact, bend, or deform the exposed portions of the edge of the electrode **36** prior to welding (e.g., similar to that as shown in FIG. **18**B). According to another exemplary embodiment, the exposed portions of the edge of

the electrode **36** may be deformed prior to coupling the current collector **440** to the electrode **36**. The current collector **440** may then be coupled to the cell housing or a terminal with another welding operation along the upper portions **444** of the current collector **440**.

[0097] Referring now to FIGS. **20** and **20**A, a member or element provided in the form of a current collector or collector plate **540** is shown according to another exemplary embodiment. The current collector **540** may be formed by a stamping operation (e.g., from a sheet metal material). According to an exemplary embodiment, the current collector **540** may be formed from a material having a thickness of between approximately 1 and 2 millimeters, but may have a greater or lesser thickness according other exemplary embodiments. According to various exemplary embodiments, the current collector **540** may be formed from any of a wide variety of conductive materials such as aluminum or an aluminum alloy (e.g., for a positive current collector), copper or a copper alloy (e.g., for a negative current collector), nickel-plated copper or an alloy thereof, etc.

[0098] According to an exemplary embodiment, the current collector **540** includes one or more lower portions **542** that are configured to be coupled to an electrode (e.g., the positive electrode **36**). The current collector **540** also includes one or more upper portions **544** that are configured to be coupled to the housing of the cell or to the terminal of the cell to create a conductive path between the electrode and the housing or terminal. According to the exemplary embodiment shown in FIG. **20**, the current collector **540** includes four lower portions **542** and four upper portions **544**. According to other exemplary embodiments, the current collector **540** may have greater or fewer upper and/or lower portions. According to an exemplary embodiment, an opening or aperture **548** is included in the current collector **540**. The aperture **548** has a central axis that is generally aligned with the central axis of the cell element **30**.

[0099] According to an exemplary embodiment, each of the lower portions **542** are connected to the upper portion by a member shown as a sidewall or shoulder **550**. As shown in FIG. **20**, the shoulders **550** may have a generally rounded profile and may smoothly transition from the lower portion **542** to the upper portion **544**. According to another exemplary embodiment, each of the lower portions **542** extends to the perimeter of the cell element **30**, while the upper portions **544** extend only partially across the cell element **30**. According to various exemplary embodiments, the lower portions **542** and/or upper portions **544** may have other configurations (e.g., the lower portions **542** may extend only partially across the end of the cell element, the upper portions **544** may extend all the way across the end of the cell element, etc.)

[0100] According to an exemplary embodiment, the current collector **540** is coupled to exposed portions of the edge of the positive electrode **36** by a welding operation (e.g., a laser welding operation) along the lower portions **542** of the current collector **540** (e.g., such as along weld lines **546** as shown in FIG. **20**A). According to one exemplary embodiment, the lower portions **542** may contact, bend, or deform the exposed portions of the edge of the electrode **36** prior to welding (e.g., similar to that as shown in FIG. **18**B). According to another exemplary embodiment, the exposed portions of the edge of the electrode **36** may be deformed prior to coupling the current collector **540** to the electrode **36**. The current collector **540** may then be coupled to the cell housing or a terminal with another welding operation along the upper portions **544** of the current collector **540**.

[0101] Referring now to FIG. **21**, a member or element provided in the form of a current collector or collector plate **640** is shown according to an exemplary embodiment. The current collector **640** may be formed from a stamping process, a laser cutting process, or other suitable process. According to an exemplary embodiment, the current collector **640** may be formed from a material having a thickness of between approximately 1 and 2 millimeters, but may have a greater or lesser thickness according other exemplary embodiments. According to various exemplary embodiments, the current collector **640** may be formed from any of a wide variety of conductive materials such as aluminum or an aluminum alloy (e.g., for a positive current collector), copper or a copper alloy (e.g., for a negative current collector), nickel-plated copper or an alloy thereof, etc.

[0102] As shown in FIG. **21**, the current collector **640** includes a first or outer member **648** that is connected to a second or inner member **644** by a plurality of members or arms **642**. As shown in FIG. **21**, the outer member **648** is connected to the inner member **644** by four arms **642**. According to other exemplary embodiments, the outer member **648** may be connected to the inner member **644** by a greater or lesser number of arms having the same or different configuration as shown in FIG. **21**.

[0103] According to the exemplary embodiment shown in FIG. **21**, the outer member **648** is provided in the form of a ring or ring-like structure. In the embodiment shown, a perimeter of the outer member **648** substantially matches/aligns with the perimeter of the cell element **30**. Also according to the exemplary embodiment shown in FIG. **21**, the inner member **644** has a generally circular shape.

[0104] According to the exemplary embodiment shown in FIG. **21**, each of the plurality of arms **642** includes a first portion connected to the outer member **648** and a second portion connected to a member or extension **650**. The extension **650** connects the arm **642** to the inner member **644**. As shown in FIG. **21**, the first portion of each of the arms **642** extends out from the outer member **648** in a generally perpendicular direction (i.e., the first portion extends generally perpendicular out from the outer member **648**). According to an exemplary embodiment, the extension **650** extends out from each of the arms **642** at a point between first and second ends of the arms **642** (e.g., at an approximate midpoint between the first and second ends of the arms **642**). According to an exemplary embodiment, the inner member **644** can move relative to the outer member **648** because of the flexibility of the arms **642** and/or the extensions **650**.

[0105] According to an exemplary embodiment, the arms **642** and/or the outer member **648** are coupled (e.g., by laser welding) to and edge of an electrode of the cell element **30** (e.g., such as along weld lines **646** as shown in FIGS. **21** and **24**C) and the inner member **644** is coupled (e.g., by laser welding) to a portion of the housing of the cell or a terminal of the cell (e.g., such as along weld lines **658** as shown in FIG. **24**C). According to an exemplary embodiment, the welding of the arms **642** is performed radially across the edge of the electrode of the cell element **30** (e.g., as shown in FIG. **21**). According to another exemplary embodiment, the inner member **644** is coupled to the edge of the electrode of the cell element **30** and the arms **642** and/or the outer member **648** are coupled to the housing or the terminal.

[0106] According to an exemplary embodiment, the geometry of the outer member **648**, arms **642**, extensions **650**, and inner member **644** define a plurality of apertures or slots. These apertures or slots allow the current collector **640** to substantially flex (e.g., move, bend, deflect, etc.) if required (e.g., when a vent deploys from the bottom of the housing). For example, as shown in FIG. **24**B, the inner member **644** is configured to flex with respect to the outer member **648** when the vent **70** deploys from the end of the cell **24**.

[0107] Having a flexible current collector allows for increased length of the cell element inside the housing (e.g., to maximize the power capacity of the cell). The flexible current collector also allows the cell element to remain substantially fixed during deployment of a vent. The flexible current collector also helps to isolate the vent from shock and vibration during handling and assembly and during use of the cell.

[0108] Referring now to FIG. **22**, a current collector **740** is shown according to another exemplary embodiment. The current collector **740** is provided with similar but slightly different geometry than that of the current collector **640** shown in FIG. **21**. The current collector **740** may be formed from a stamping process, a laser cutting process, or other suitable process. According to an exemplary embodiment, the current collector **740** may be formed from a material having a thickness of between approximately 1 and 2 millimeters, but may have a greater or lesser thickness according other exemplary embodiments. According to various exemplary embodiments, the current collector **740** may be formed from any of a wide variety of conductive materials such as aluminum or an aluminum alloy (e.g., for a positive current collector), copper or a copper alloy (e.g., for a negative current collector), nickel-plated copper or an alloy thereof, etc.

[0109] As shown in FIG. **22**, the current collector **740** includes a first or outer member **748** that is connected to a second or inner member **744** by a plurality of members or arms **742**. As shown in FIG. **22**, the outer member **748** is connected to the inner member **744** by four arms **742**. According to other exemplary embodiments, the outer member **748** may be connected to the inner member **744** by a greater or lesser number of arms.

[0110] According to the exemplary embodiment shown in FIG. **22**, the outer member **748** is provided in the form of a ring or ring-like structure. According to an exemplary embodiment, a perimeter of the outer member **748** substantially matches/aligns with a perimeter of the cell element. According to the exemplary embodiment shown in FIG. **22**, the inner member **744** has a generally circular shape.

[0111] According to the exemplary embodiment shown in FIG. **22**, each of the plurality of arms **742** includes a first portion connected to the outer member **748** and a second portion connected to a member or extension **750**. The extension **750** connects the arm **742** to the inner member **744**. As shown in FIG. **22**, the first portion of each of the arms **742** extends out from the outer member **748** in a generally perpendicular direction (i.e., the first portion extends generally perpendicular out from the outer member **748**). According to an exemplary embodiment, the extension **750** extends out from each of the arms **742** at a point between first and second ends of the arms **742** (e.g., at a point near the first end of the arms **742**). According to an exemplary embodiment, the inner member **744** can move relative to the outer member **748** because of the flexibility of the arms **742** and/or the extensions **750**.

[0112] According to an exemplary embodiment, the arms **742** and/or the outer member **748** are coupled (e.g., by laser welding) to an edge of an electrode of the cell element and the inner member **744** is coupled (e.g., by laser welding) to a portion of the housing of the cell or a terminal of the cell. According to an exemplary embodiment, the welding of the arms **742** is performed radially across the end of the cell element. According to another exemplary embodiment, the inner member **744** is coupled to the edge of the electrode of the cell element and the arms **742** and/or the outer member **748** are coupled to the housing or the terminal.

[0113] According to an exemplary embodiment, the geometry of the outer member **748**, arms **742**, extensions **750**, and inner member **744** define a plurality of apertures or slots. These apertures or slots allow the current collector **740** to substantially flex (e.g., move, bend, deflect, etc.) if required (e.g., when a vent deploys from the bottom of the housing). For example, the inner member **744** is configured to flex with respect to the outer member **748** (or vice-versa).

[0114] Referring now to FIG. **23**, a current collector **840** is shown according to another exemplary embodiment. The current collector **840** may be formed from a stamping process, a laser cutting process, or other suitable process. According to an exemplary embodiment, the current collector **840** may be formed from a material having a thickness of between approximately 1 and 2 millimeters, but may have a greater or lesser thickness according other exemplary embodiments. According to various exemplary embodiments, the current collector **840** may be formed from any of a wide variety of conductive materials such as aluminum or an aluminum alloy (e.g., for a positive current collector), copper or a copper alloy (e.g., for a negative current collector), nickel-plated copper or an alloy thereof, etc.

[0115] As shown in FIG. **23**, the current collector **840** includes a first or outer member **848** that is connected to a second or inner member **844**. As shown in FIG. **23**, there are two outer members **848** that are connected to the inner member **844**. According to other exemplary embodiments, there may be a greater or lesser number of outer members **848**. According to an exemplary embodiment, each of the outer members **848** are connected to a member or element shown as an arm **842** that in turn is connected to the inner member **844**. According to the exemplary embodiment shown in FIG. **23**, the outer member **848** is provided in the form of an enlarged portion of outer arm **842**.

[0116] As shown in FIG. **23**, each of the arms **842** includes an outer portion **850** and an inner portion **852**. According to an exemplary embodiment, an outer portion **850** of the arm **842** substantially matches/aligns with a perimeter of the cell element. As shown in FIG. **23**, each of the inner portions **852** of the arms **842** double back along at least a portion of the outer portion **850** of the arms **842** before connecting to the inner member **844**.

[0117] According to an exemplary embodiment, the outer portion **850** of the arms **842** and/or the outer members **848** are coupled (e.g., by laser welding) to an edge of an electrode of the cell element and the inner member **844** is coupled (e.g., by laser welding) to a portion of the housing of the cell or to a terminal of the cell. According to another exemplary embodiment, the inner member **844** is coupled to the edge of an electrode of the cell element and the outer portion **850** of the arms **842** and/or the outer member **848** are coupled to the housing or the terminal.

[0118] According to an exemplary embodiment, the geometry of the outer members **848**, arms **842**, and inner member **844** define a plurality of apertures or slots. These apertures or slots allow the current collector **840** to substantially flex (e.g., move, bend, deflect, etc.) if required (e.g., when a vent deploys from the bottom of the housing). For example, the inner member **844** is configured to flex with respect to the outer member **848** (or vice-versa).

[0119] Referring now to FIGS. **24**A-**24**D, according to an exemplary embodiment, the cell **24** includes a vent **70**. The vent **70** is configured to allow gases and/or effluent to exit the cell **24** once the pressure inside the cell **24** reaches a predetermined amount (e.g., during a rise in cell temperature). When the vent **70** deploys (e.g., activates, opens, separates, etc.), the gases and/or effluent inside the cell **24** exit the cell **24** in order to lower the pressure inside the cell **24** (e.g., as represented by arrows **76** shown in FIG. **24**B). According to an exemplary embodiment, the vent **70** acts as a safety device for the cell **24** during a high pressure occurrence.

[0120] According to an exemplary embodiment, the vent **70** is located in the bottom or bottom portion of the housing **25**. According to other exemplary embodiments, the vent **70** may be located elsewhere (e.g., such as in the lid or cover of the cell). According to another exemplary embodiment, the vent **70** may be located in a cover or bottom that is a separate component from the housing **25** that in turn is coupled to the housing **25** (e.g., by a welding operation).

[0121] According to an exemplary embodiment, the bottom of the housing **25** may include a ridge, projection, or ring of material **74** (e.g., as shown in FIGS. **24**A and **24**B) to prevent fracture of the vent **70** during handling and/or assembly of the cell **24**. The ring of material **74** provides for a clearance space between the vent **70** and a surface that the cell **24** is set upon. According to an exemplary embodiment, the clearance space is configured to prevent the vent **70** from being accidentally bumped (and deployed) during handling and/or assembly of the cell **24**.

[0122] As shown in FIG. **24**A, the vent **70** includes at least one annular fracture groove **72** (e.g., ring, trough, pressure point, fracture point, fracture ring, etc.). According to an exemplary embodiment, the annular fracture groove **72** has a V-shaped bottom and is configured to break away (i.e., separate) from the bottom of the housing **25** when the vent **70** deploys. According to other exemplary embodiments, the bottom of the annular fracture groove **72** may have another shape (e.g., rounded shape, curved shape, U-shape, etc.).

[0123] As stated earlier, the vent **70** is configured to deploy once the pressure inside the cell **24** reaches a pre-determined amount. When the vent **70** deploys, the annular fracture groove **72** fractures and separates the vent **70** from the rest of the bottom of the housing **25**, allowing the internal gases and/or effluent to escape the cell (e.g., as shown in FIG. **24**B). By having the vent **70** separate from the bottom of the housing **25**, the vent **70** acts as a current interrupt or current disconnect device. This is because the separation of the vent **70** from the bottom of the housing **25** disrupts the flow of current from the cell element **30** (through the positive current collector **640**) to the housing **25**. In this way, the vent **70** acts not only as an over-pressure safety device, but also as a current disconnect device. In order to help insulate the cell element **30** and the current collector **640** from the housing **25**, the insulative wrap **46** may include an extension **47** provided between the current collector **640** and the bottom of the housing **25**.

[0124] According to an exemplary embodiment, the vent **70** (e.g., the annular fracture groove **72**) is formed by tooling located external the housing **25**. The tooling tolerance is only affected by one side of the tool, allowing for a more consistent annular fracture groove **72**, resulting in a more consistent and repeatable opening of the vent **70**. The depth, shape, and size of the fracture groove **72** may be easily modified simply by changing the tooling. Additionally, the vent **70** is easy to clean and inspect since the vent **70** (and annular fracture groove **72**) is located on an external side of the housing **25**.

[0125] According to one exemplary embodiment, the cell element **30** does not move during deployment of the vent **70** (i.e., the cell element remains stationary). According to such exemplary embodiments, flexible current collectors may be utilized (e.g., such as the current collector **640** shown in FIGS. **21** and **24**A-C, the current collector **740** shown in FIG. **22**, or the current collector **840** shown in FIG. **23**). According to other exemplary embodiments, the cell element **30** may move in order to help deploy the vent **70** (e.g., by "pushing" or "punching" the current collector through the vent). According to such exemplary embodiments, non-flexible current collectors may be utilized (e.g., such as the current collector **340** shown in FIGS. **14**-**17**, the current collector **440** shown in FIG. **19**, or the current collector **540** shown in FIG. **20**.).

[0126] Referring now to FIG. **24**D, a housing **125** for an electrochemical cell is shown according to another exemplary embodiment. The housing **125** includes a vent **170** provided in a bottom portion of the housing **125**. According to other exemplary embodiments, the vent **170** may be provided elsewhere (e.g., such as in the lid or cover of the cell). According to another exemplary embodiment, the vent **170** may be located in a cover or bottom that is a separate component from the housing **125** that in turn is coupled to the housing **125** (e.g., by a welding operation).

[0127] According to an exemplary embodiment, the bottom of the housing **125** may include a ridge, projection, or ring of material **174** to prevent fracture of the vent **170** during handling and/or assembly of the cell. The ring of material **174** provides for a clearance space between the vent **170** and a surface that the cell is set upon. According to an exemplary embodiment, the clearance space is configured to prevent the vent **170** from being accidentally bumped (and deployed) during handling and/or assembly of the cell.

[0128] As shown in FIG. **24**D, the vent **170** includes at least one annular fracture groove **172** (e.g., ring, trough, pressure point, fracture point, fracture ring, etc.). According to an exemplary embodiment, the annular fracture groove **172** has a V-shaped bottom and is configured to break away (i.e., separate) from the bottom of the housing **125** when the vent **170** deploys. According to other exemplary embodiments, the bottom of the annular fracture groove **172** may have another shape (e.g., rounded shape, curved shape, U-shape, etc.).

[0129] Referring now to FIGS. **25**-**29**, a member or element provided in the form of a current collector or collector plate **940** is shown according to an exemplary embodiment. As shown best in FIG. **29**, the current collector **940** is used to conductively couple an end of the electrode (e.g., the negative electrode **38**) of the cell element **30** to a terminal (e.g., the negative terminal **28**).

[0130] The current collector **940** may be formed from a stamping process, a laser cutting process, or other suitable process. According to an exemplary embodiment, the current collector **940** may be formed from a material having a thick-

ness of between approximately 1 and 2 millimeters, but may have a greater or lesser thickness according other exemplary embodiments. According to various exemplary embodiments, the current collector **940** may be formed from any of a wide variety of conductive materials such as aluminum or an aluminum alloy (e.g., for a positive current collector), copper or a copper alloy (e.g., for a negative current collector), nickel-plated copper or an alloy thereof, etc.

[0131] Referring to FIGS. **26-27**, the current collector **940** is provided in the form of a generally flat member having a main body **942**. Extending out from one end of the main body **942** is at least one tab or extension **944** (shown in FIG. **27** as at least partially folded over the main body **942**). According to an exemplary embodiment, the tab **944** is at least partially folded over the main body **942** multiple times (e.g., similar to the tab **44** shown in FIG. **4**). According to an exemplary embodiment, the main body **942** includes a hole or aperture **950** (e.g., as shown in FIG. **26**). The aperture **950** may be provided as generally aligned with the center of the cell element **30**.

[0132] According to an exemplary embodiment, the tab **944** is configured to be coupled to a terminal (e.g., the negative terminal) of the cell (e.g., by laser welding). The tab **944** provides a substantially flexible connection between the electrode of the cell element and the terminal and allows the cell element to move relative to the terminal or housing if required.

[0133] According to an exemplary embodiment, the current collector **940** also includes a plurality of members or extensions shown as arms **948** that are configured to project or extend out from the main body **942** of the current collector **940**. The arms **948**, along with the main body **942** of the current collector **940**, extend out across one end of the cell element **30** (e.g., to contact the edge of the negative electrode **38** such as shown in FIG. **25**). According to another exemplary embodiment, the arms **948** and main body **942** of the current collector **940** may extend only partially across the end of the cell element **30**. While two arms **948** are shown in the exemplary embodiment of FIGS. **25-29**, according to other exemplary embodiments, the current collector **940** may have a greater or lesser number of arms **948**.

[0134] As best seen in FIG. **25**, the outer edge of the arms **948** may include a rounded or curved shape to complement the perimeter of the cell element **30**. According to other exemplary embodiments, the arms **948** (including the ends of the arms) may have other shapes and/or sizes. The current collector **940** may be coupled to the electrode **38** with a welding operation (e.g., a laser welding operation) along the arms **948** and main body **942** of the current collector **940**.

[0135] According to an exemplary embodiment, radial welds are used (e.g., such as along weld lines **946** as shown in FIG. **25**) to couple the current collector **940** to the electrode **38**. According to one exemplary embodiment, the radial welds extend from the center of the main body **942** out to the outer edges of the main body **942** and arms **948**. According to other exemplary embodiments, the welds (radial or otherwise) may be formed differently. According to an exemplary embodiment, the welding of the current collector **940** to the electrode is done prior to the folding of the tab **944**, but may occur at a different time according to other exemplary embodiments.

[0136] The use of radial welds (i.e., welds that are radial with respect to the edge of the electrode of the cell element **30**) allows for more efficient current flow from the electrode of the cell element **30** to the current collector **940** in that all of the portions of the edge of the wound electrode are coupled (e.g., welded) to the current collector **940** (via the arms **948** and the main body **942**). Additionally, radial welds on a wound cell element (such as shown in FIG. **25**) allow the weld to occur substantially perpendicular to the edge of the electrode, providing for better weld control and repeatability of the weld from one cell to the next.

[0137] While the current collectors of FIGS. **8-13**B and **25-29** are generally shown as being coupled to a negative electrode, according to other exemplary embodiments they may be coupled to a positive electrode. Likewise, while the current collectors of FIGS. **14-24**C are generally shown as coupled to a positive electrode, according to other exemplary embodiments they may be coupled to a negative electrode. Furthermore, while the current collectors shown in FIGS. **8-29** are configured for use with wound cell elements, according to another exemplary embodiment, the current collectors may also be used with a series of flat plates (e.g., prismatic cells) or other cell configurations.

[0138] According to various exemplary embodiments, the current collectors shown in FIGS. **8-29** may be formed from a relatively thin sheet of conductive material (e.g., by a stamping operation, a laser cutting operation, etc.) or may be formed by an extrusion process. According to various exemplary embodiments, the current collectors may be substantially rigid or may include a flexible or pliable portion (such as, e.g., the tabs shown in FIGS. **8-13** and **25-29** or the arms shown in FIGS. **21-23**).

[0139] Referring now to FIG. **30**, an assembly process used to make a battery or electrochemical cell is shown according to an exemplary embodiment. In a first step **1010**, the separators and electrodes are wound around the mandrel to form the cell element in a jelly roll configuration. In a second step **1020**A/**1020**B, the positive and negative current collectors are electrically or conductively coupled (e.g., by a welding operation such as laser welding) to the positive and negative electrode ends of the jelly roll, respectively. According to various exemplary embodiments, the step **1020**A may occur before, after, or concurrent with the step **1020**B.

[0140] In a third step **1030**, the jelly roll is inserted into the cell housing. In a fourth step **1040**, the positive current collector is electrically or conductively coupled (e.g., by a welding operation) to the base of the cell housing. In a fifth step **1050**, the negative current collector is electrically or conductively coupled (e.g., by a welding operation) to the insulated terminal of the cap of the cell. In a sixth step **1060**, the cap of the cell is coupled to the housing of the cell (e.g., by a welding operation).

[0141] According to an exemplary embodiment, a current collector or plate for an electrochemical cell includes a member having a first surface and a second surface opposite the first surface. The second surface comprises at least one projection. The member is configured to be coupled to an electrode of the cell, the electrode having a wound configuration. The at least one projection is configured to engage an offset edge of the electrode so that the member can be welded to the cell.

[0142] Another embodiment of the invention relates to a current collector or plate for an electrochemical cell including a member. The member includes a main body and at least two legs extending out from a first end of the body. The legs are configured to engage an offset edge of a wound electrode of the cell so that the member can be welded to the cell.

[0143] One embodiment of the invention relates to a substantially flexible current collector for an electrochemical cell. The current collector includes a plurality of members coupled to a cell element and an inner ring coupled to a bottom of a housing.

[0144] Another embodiment of the invention relates to a current collector for an electrochemical cell. The current collector includes a main body and at least one arm extending out from a first end of the main body. The main body and the at least one arm are configured to be conductively coupled to a cell element. The current collector also includes a member extending out from the main body, the member being singularly folded partially over the main body. An end of the member is configured to be conductively coupled a terminal of the cell.

[0145] As utilized herein, the terms "approximately," "about," "substantially," and similar terms are intended to have a broad meaning in harmony with the common and accepted usage by those of ordinary skill in the art to which the subject matter of this disclosure pertains. It should be understood by those of skill in the art who review this disclosure that these terms are intended to allow a description of certain features described and claimed without restricting the scope of these features to the precise numerical ranges provided. Accordingly, these terms should be interpreted as indicating that insubstantial or inconsequential modifications or alterations of the subject matter described and claimed are considered to be within the scope of the invention as recited in the appended claims.

[0146] It should be noted that the term "exemplary" as used herein to describe various embodiments is intended to indicate that such embodiments are possible examples, representations, and/or illustrations of possible embodiments (and such term is not intended to connote that such embodiments are necessarily extraordinary or superlative examples).

[0147] The terms "coupled," "connected," and the like as used herein mean the joining of two members directly or indirectly to one another. Such joining may be stationary (e.g., permanent) or moveable (e.g., removable or releasable). Such joining may be achieved with the two members or the two members and any additional intermediate members being integrally formed as a single unitary body with one another or with the two members or the two members and any additional intermediate members being attached to one another.

[0148] References herein to the positions of elements (e.g., "top," "bottom," "above," "below," etc.) are merely used to describe the orientation of various elements in the FIGURES. It should be noted that the orientation of various elements may differ according to other exemplary embodiments, and that such variations are intended to be encompassed by the present disclosure.

[0149] It is important to note that the construction and arrangement of the current collectors for an electrochemical cell as shown in the various exemplary embodiments is illustrative only. Although only a few embodiments have been described in detail in this disclosure, those skilled in the art who review this disclosure will readily appreciate that many modifications are possible (e.g., variations in sizes, dimensions, structures, shapes and proportions of the various elements, values of parameters, mounting arrangements, use of materials, colors, orientations, etc.) without materially departing from the novel teachings and advantages of the subject matter described herein. For example, elements shown as integrally formed may be constructed of multiple parts or elements, the position of elements may be reversed or otherwise varied, and the nature or number of discrete elements or positions may be altered or varied. The order or sequence of any process or method steps may be varied or re-sequenced according to alternative embodiments. Other substitutions, modifications, changes and omissions may also be made in the design, operating conditions and arrangement of the various exemplary embodiments without departing from the scope of the present invention.

What is claimed is:

1. A current collector for an electrochemical cell comprising:

a member comprising an outer member and an inner member coupled to the outer member by a plurality of flexible arms configured to allow the inner member to move relative to the outer member.

2. The current collector of claim **1**, wherein the outer member is a ring.

3. The current collector of claim **1**, wherein the inner member has a generally circular shape.

4. The current collector of claim **1**, wherein each of the plurality of arms comprises a first portion that extends generally perpendicular to the outer member.

5. The current collector of claim **4**, wherein each of the plurality of arms further comprises a second portion extending from the first portion that couples the first portion to the inner member.

6. The current collector of claim **4**, wherein the first portion of each of the plurality of arms is welded to multiple portions of an edge of an electrode of an electrochemical cell.

7. The current collector of claim **6**, wherein the welding of each of the plurality of arms occurs radially with respect to the edge of the electrode of the electrochemical cell.

8. A flexible current collector for an electrochemical cell, the current collector comprising:

an outer portion;

an inner portion; and

a plurality of connecting members, each of the connecting members having a first end coupled to the outer portion and a second end coupled to the inner portion, wherein the connecting members are configured to allow the inner portion to move relative to the outer portion.

9. The current collector of claim **8**, wherein the outer portion is in the form of a ring.

10. The current collector of claim **8**, wherein the inner portion has a generally circular shape.

11. The current collector of claim **8**, wherein the first end of each of the plurality of connecting members extends generally perpendicular to the outer portion.

12. The current collector of claim **11**, wherein the first end of each of the plurality of connecting members is welded to multiple portions of an edge of an electrode of an electrochemical cell.

13. An electrochemical cell comprising a current collector comprising:

an outer member and an inner member coupled to the outer member by a plurality of flexible arms configured to allow the inner member to move relative to the outer member.

14. The electrochemical cell of claim **13**, wherein at least one of the outer member and the plurality of arms is coupled to an electrode of the electrochemical cell and the inner member is coupled to at least one of a housing of the electrochemical cell and a terminal of the electrochemical cell.

15. The electrochemical cell of claim **13**, wherein the inner member is coupled to an electrode of the electrochemical cell and at least one of the outer member and the plurality of arms is coupled to at least one of a housing of the electrochemical cell and a terminal of the electrochemical cell.

16. The electrochemical cell of claim **13**, wherein the current collector is coupled to a positive electrode.

17. The electrochemical cell of claim **13**, wherein the current collector is coupled to a negative electrode.

18. The electrochemical cell of claim **13**, further comprising a vent, wherein the inner member of the current collector moves relative to the outer member of the current collector due to deployment of the vent.

19. The electrochemical cell of claim **18**, wherein deployment of the vent disrupts the flow of current within the electrochemical cell.

20. The electrochemical cell of claim **18**, wherein deployment of the vent allows gases to exit the electrochemical cell to lower a pressure within the electrochemical cell.

* * * * *