US 20210211640A1

(19) United States
(12) Patent Application Publication
Bristol et al.
(10) Pub. No.: US 2021/0211640 A1
(43) Pub. Date: Jul. 8, 2021

(54) **SWAPPABLE STRAP FOR A HEAD-MOUNTED DISPLAY SYSTEM**

(71) Applicant: **Facebook Technologies, LLC**, Menlo Park, CA (US)

(72) Inventors: **Peter Wesley Bristol**, Seattle, WA (US); **Shane Michael Ellis**, Bellevue, WA (US); **Joseph Patrick Sullivan**, Seattle, WA (US); **Joel Bernard Jacobs**, Seattle, WA (US); **Glen Jason Tompkins**, Woodinville, WA (US)

(21) Appl. No.: **16/733,527**

(22) Filed: **Jan. 3, 2020**

Publication Classification

(51) **Int. Cl.**
H04N 13/332 (2006.01)
H04R 1/10 (2006.01)

(52) **U.S. Cl.**
CPC ***H04N 13/332*** (2018.05); *H04N 2213/001* (2013.01); ***H04R 1/1058*** (2013.01); ***H04R 1/1008*** (2013.01)

(57) **ABSTRACT**

A head-mounted display (HMD) system may include a body having a right side and a left side, a display device coupled to the body and positioned to display content to a user when the HMD system is donned by the user, a right side arm coupled to the right side of the body and dimensioned such that, when coupled to a first portion of a swappable strap, the right side arm and the first portion of the strap form a first fastener, and a left side arm coupled to the left side of the body and dimensioned such that, when coupled to a second portion of the strap, the left side arm and the second portion of the strap form a second fastener. The first fastener and the second fastener may detachably secure the strap to the body of the HMD system. Various other methods and systems are also disclosed.

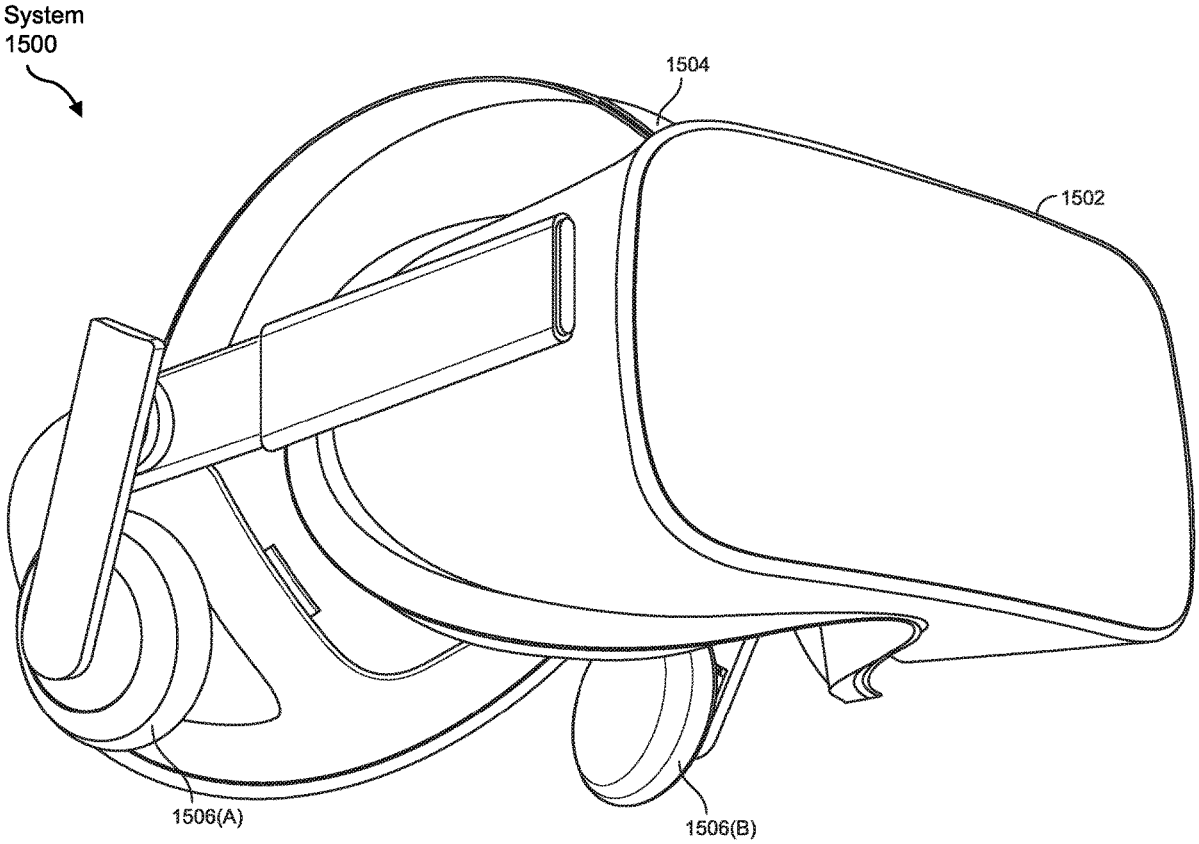

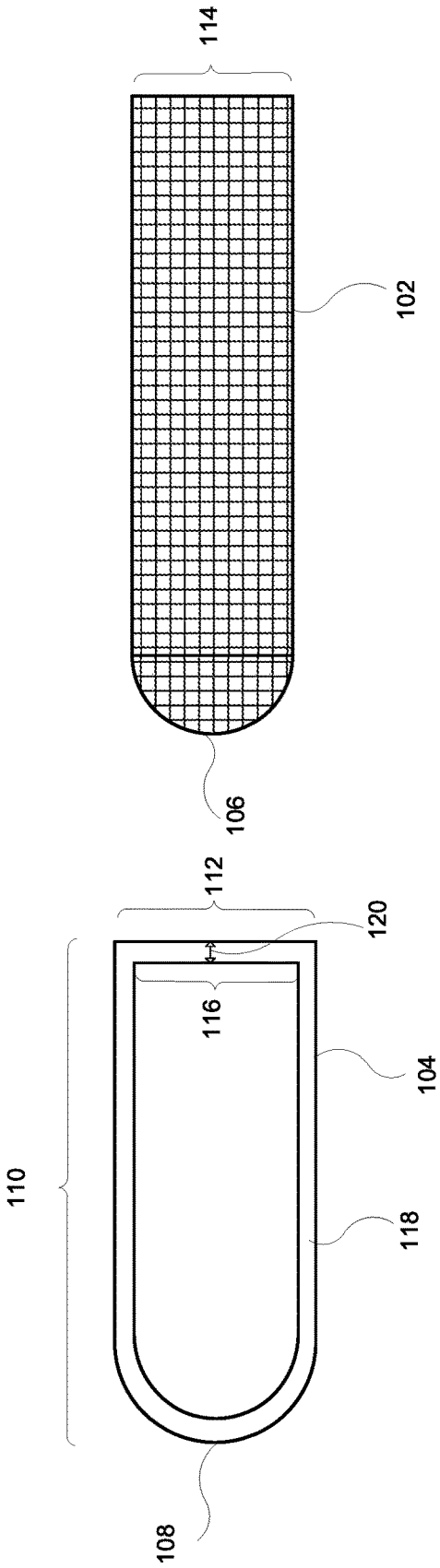

FIG. 1

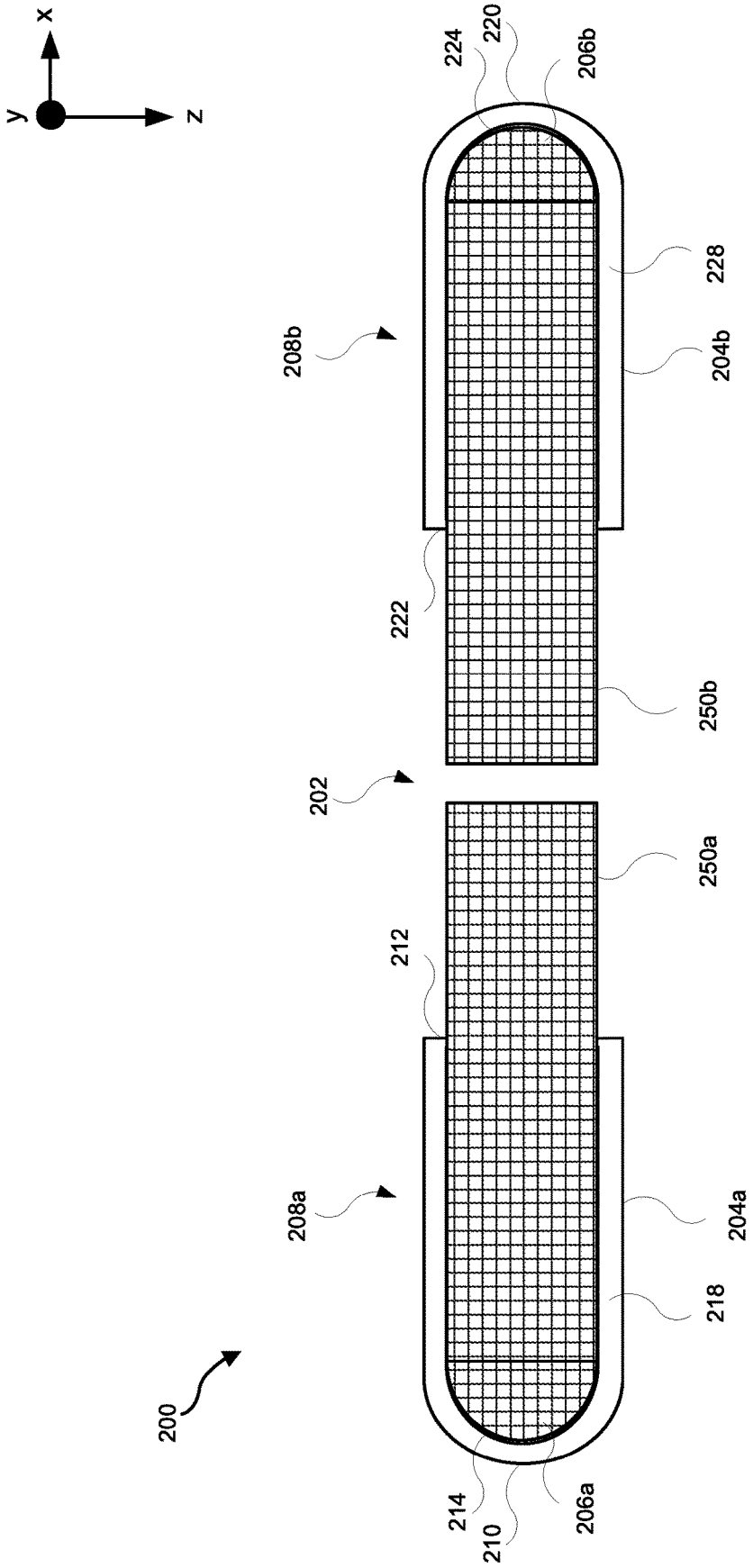
x
y
z
224
220
206b
228
208b
204b
222
250b
202
250a
212
208a
204a
218
200
214
210
206a

FIG. 2

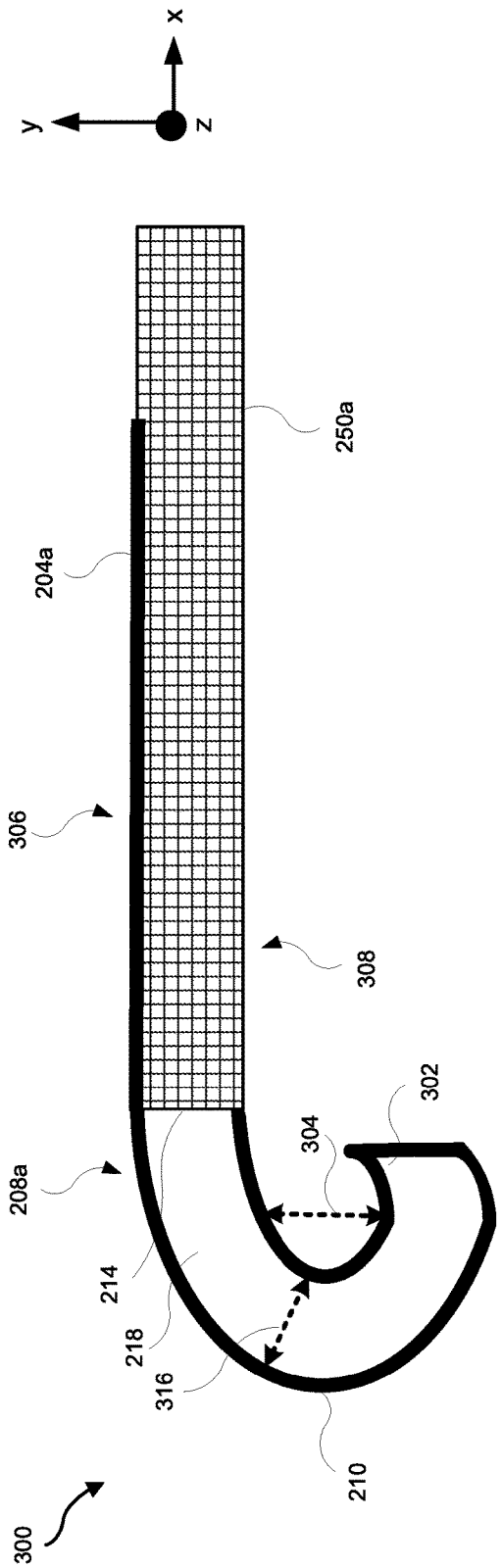
x
y
z
250a
204a
306
308
302
304
208a
214
218
316
210
300

FIG. 3A

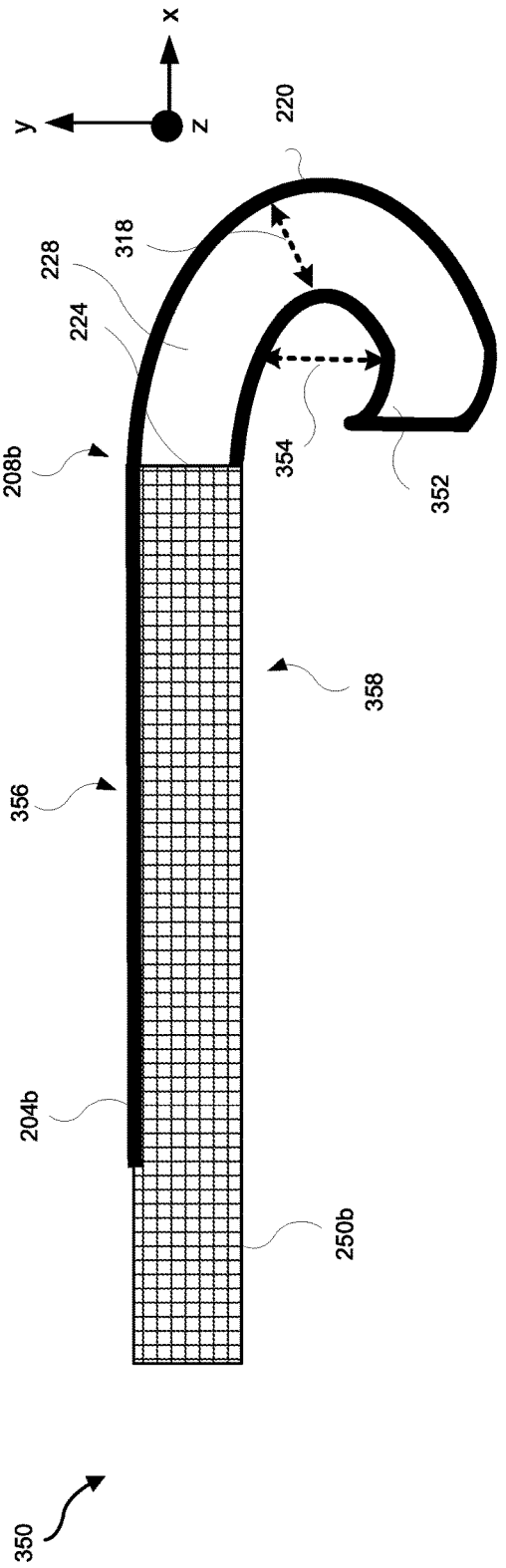
x
y
z
220
318
228
224
208b
354
352
358
356
204b
250b
350

FIG. 3B

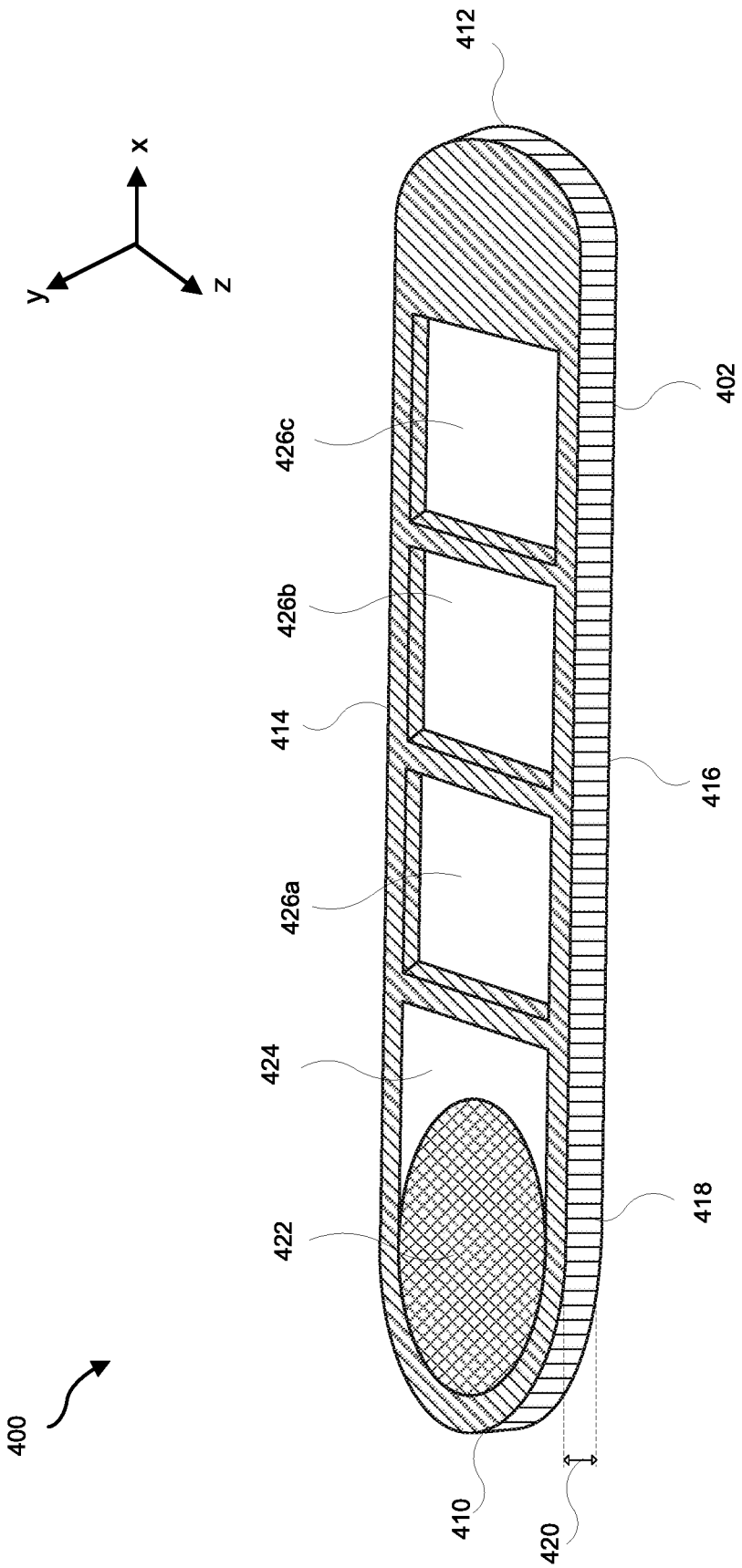

FIG. 4

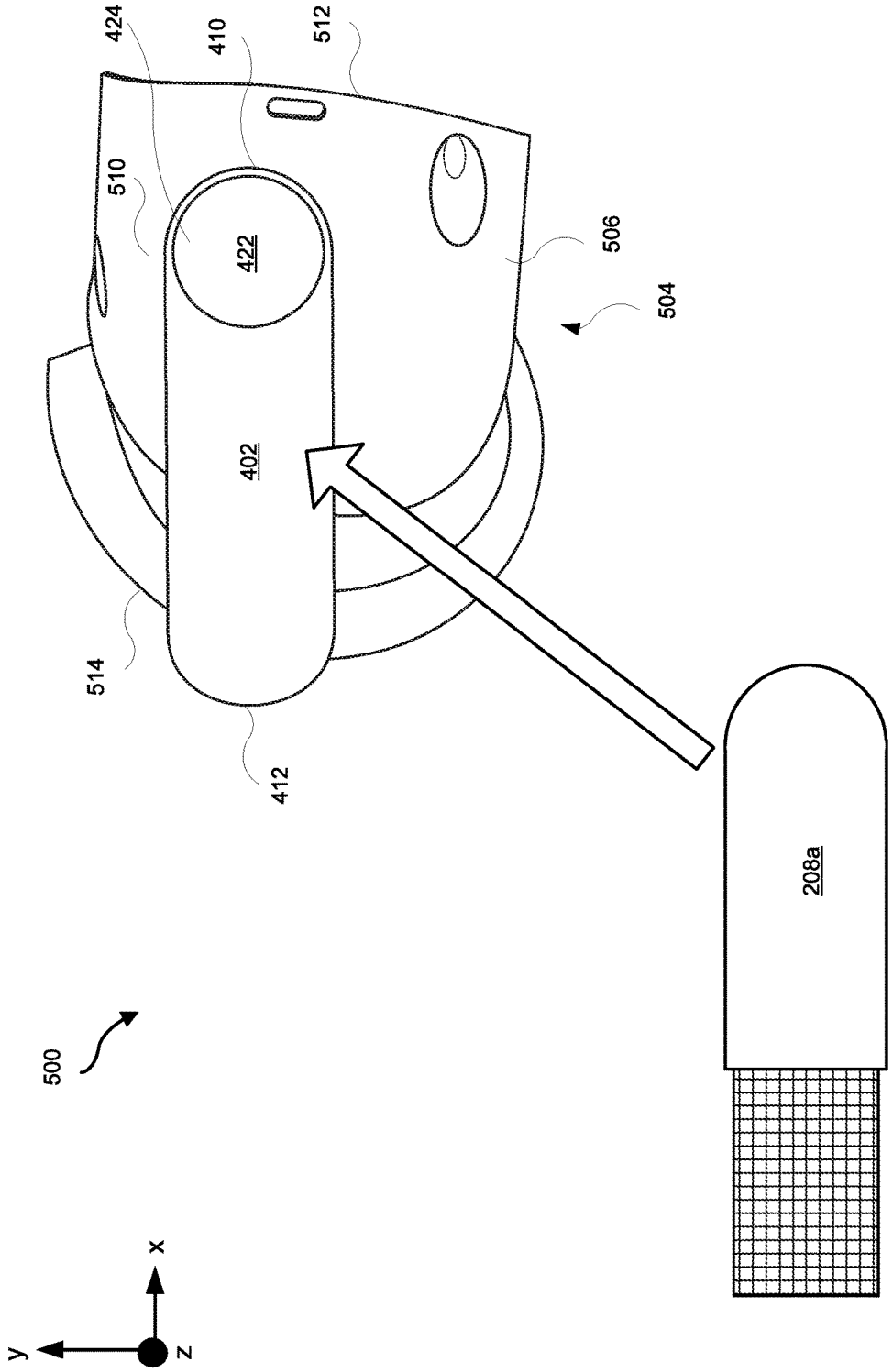

FIG. 5

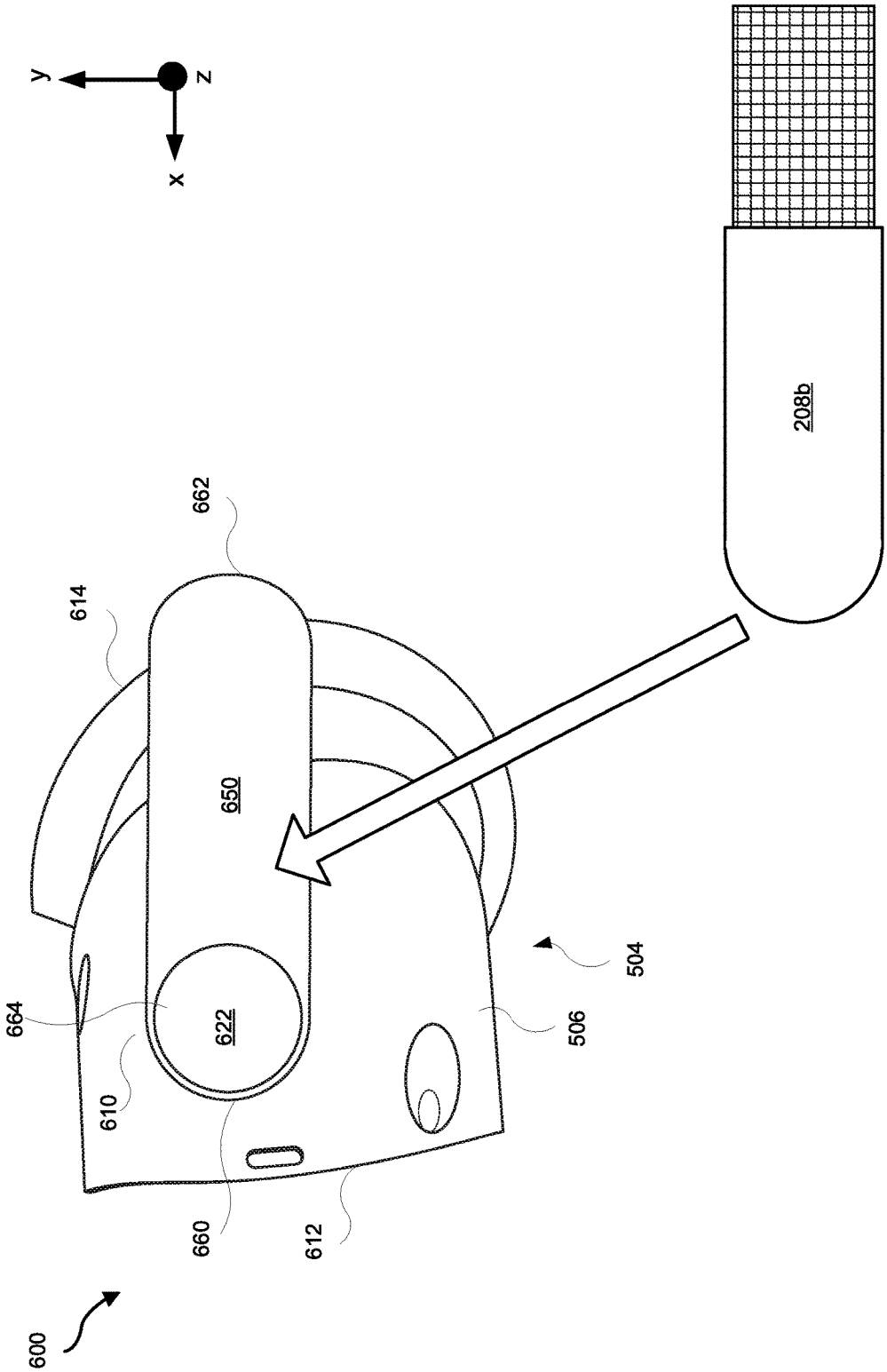

FIG. 6

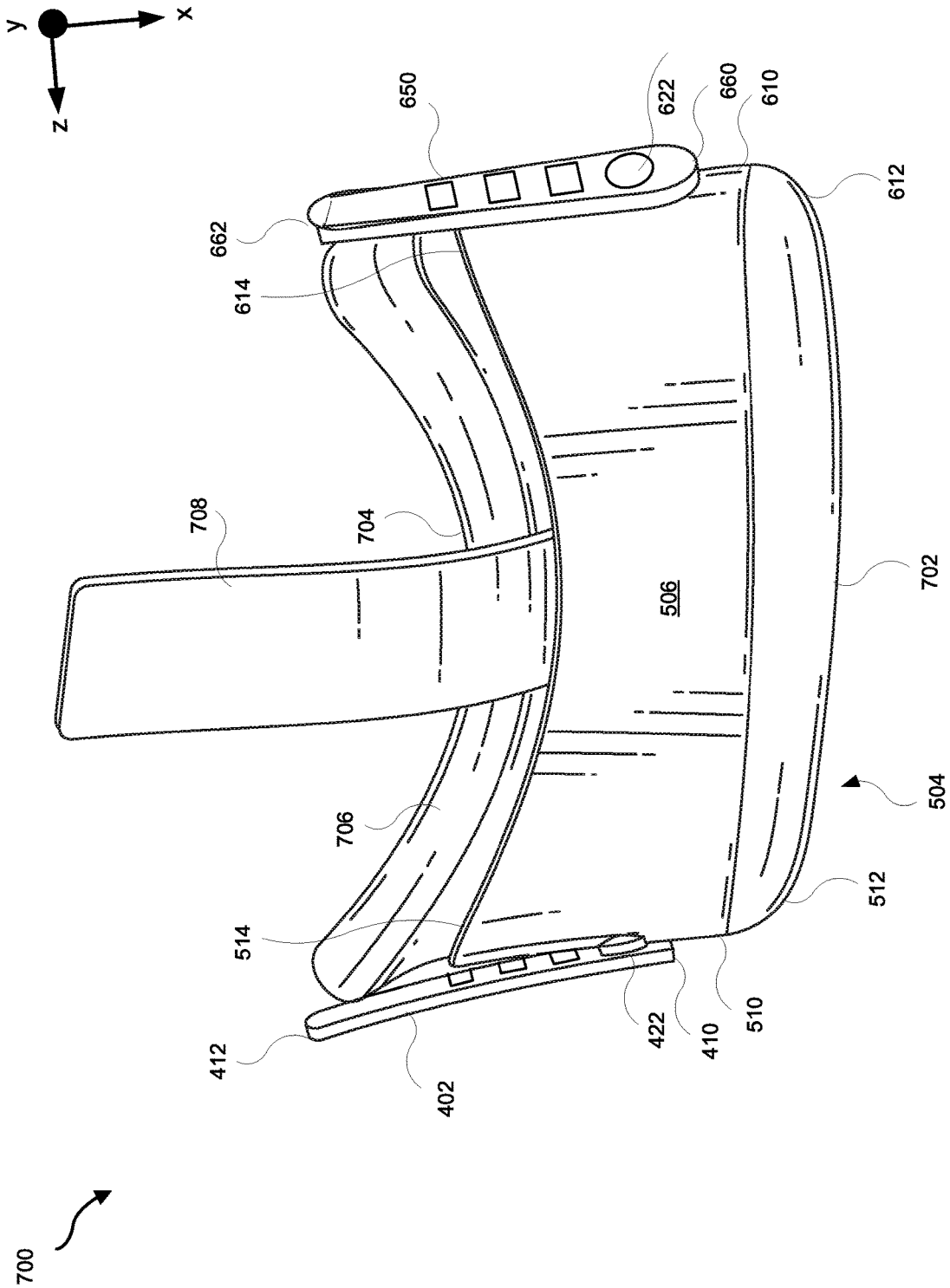
y
x
z
650
622
660
610
612
662
614
708
704
506
702
504
706
512
514
510
422
410
412
402
700

FIG. 7

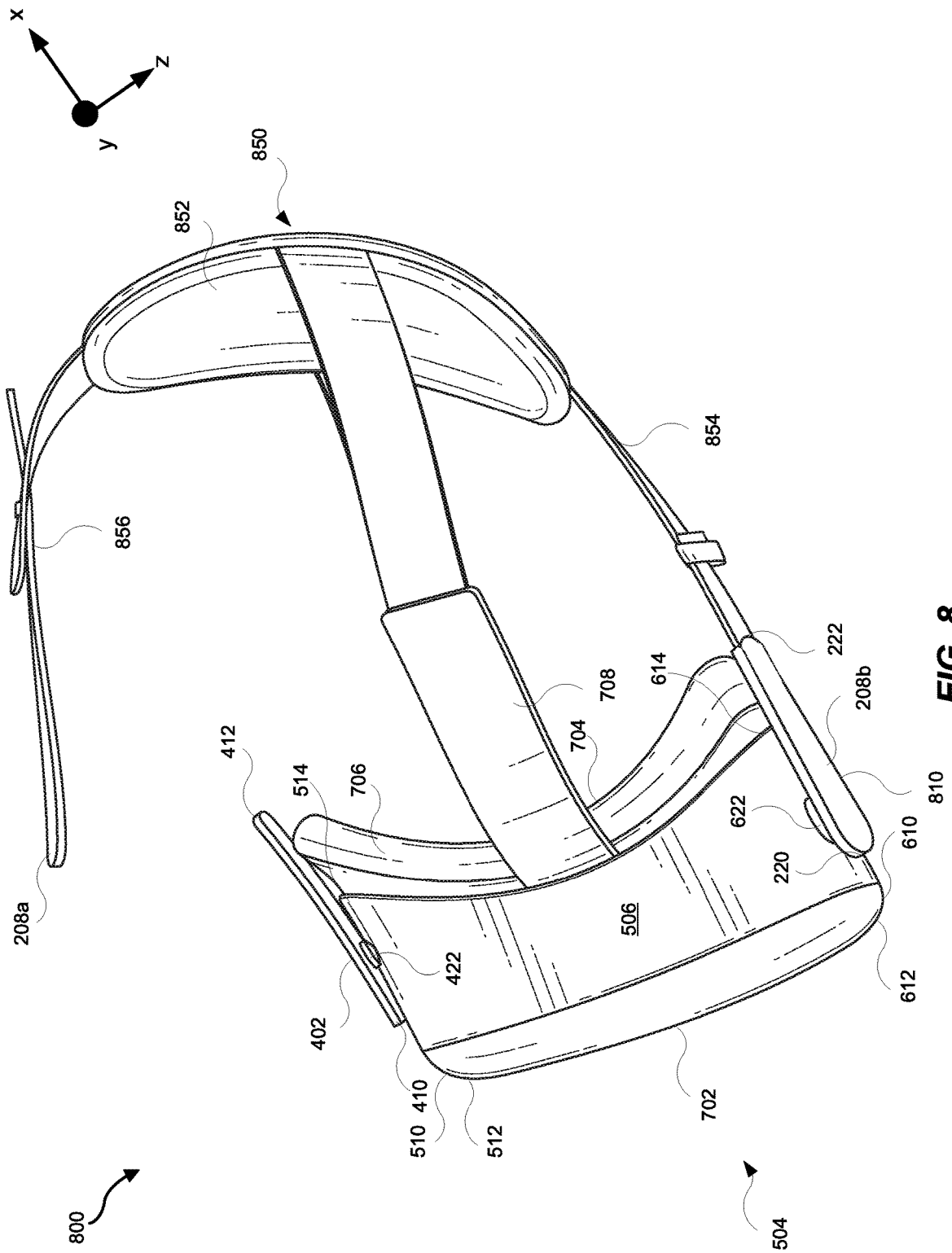
x
z
y
850
852
854
856
208a
222
208b
614
708
704
412
514
706
622
810
610
220
506
422
402
612
410
510
512
702
800
504

FIG. 8

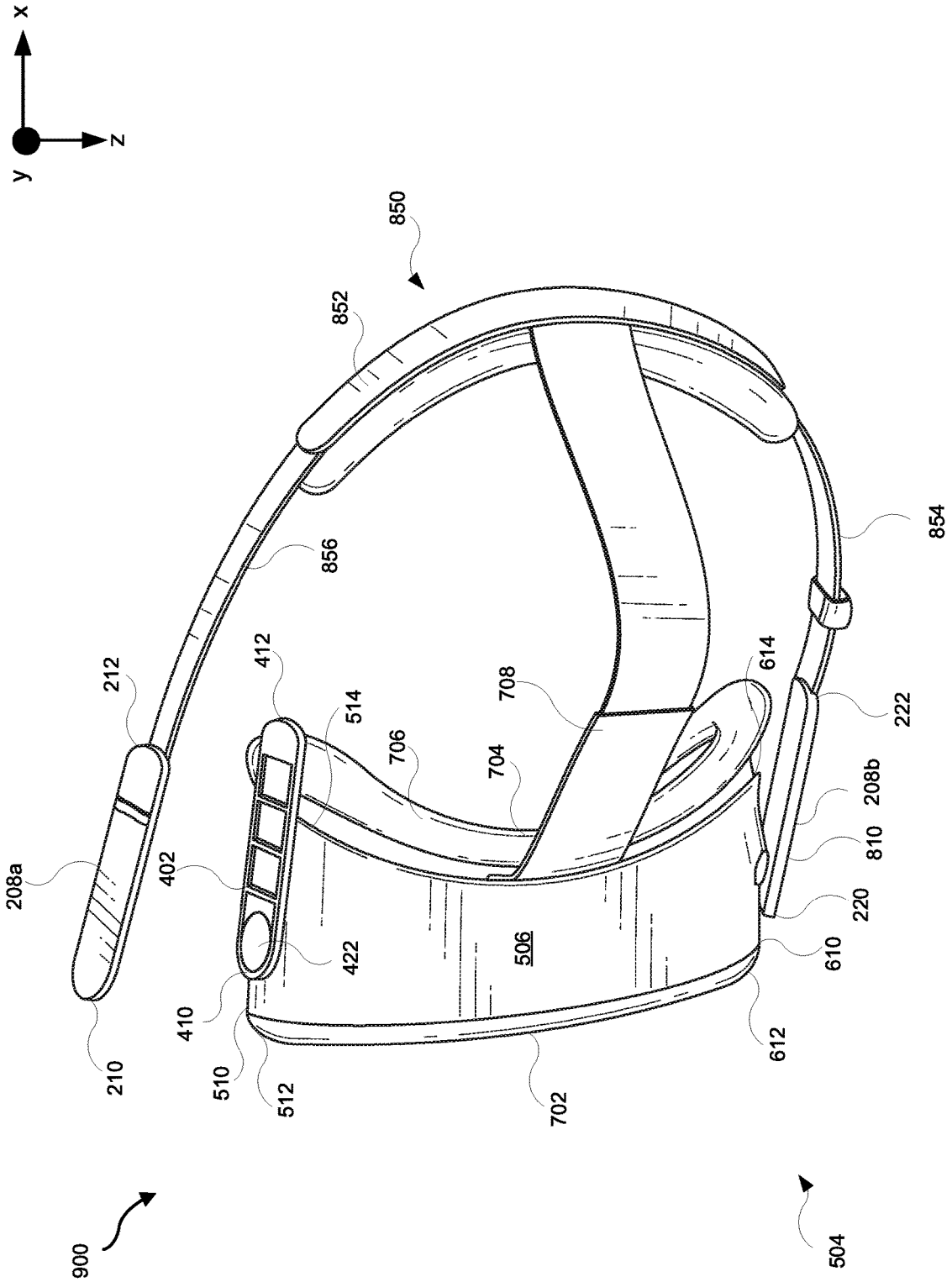
x
y
z
850
852
856
854
212
412
514
708
614
222
706
704
208b
810
208a
402
220
422
506
610
410
612
210
510
512
702
900
504

FIG. 9

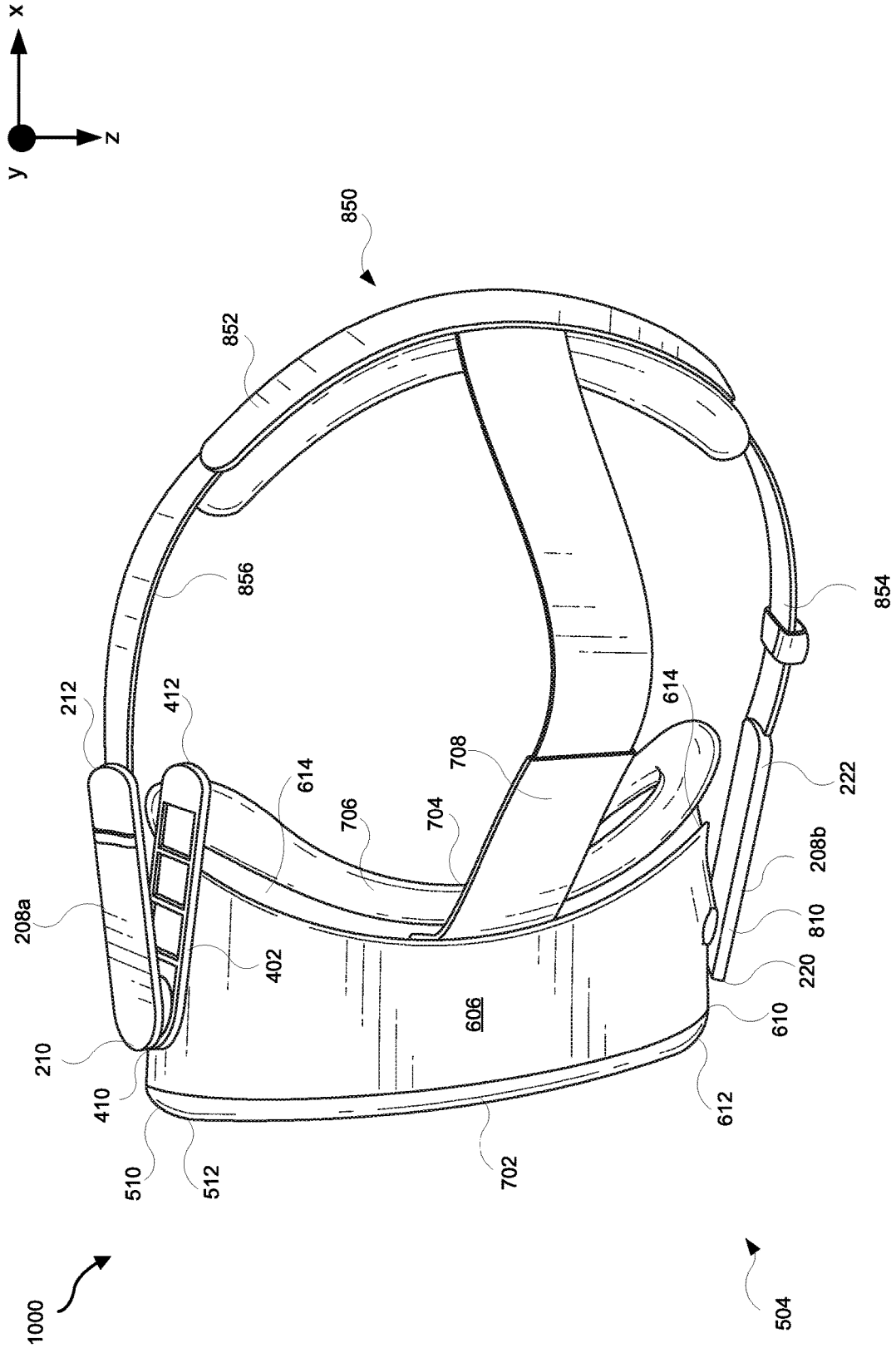
x
y
z
850
852
856
854
212
412
614
708
706
704
614
222
208b
208a
402
810
220
606
610
210
410
612
510
512
702
1000
504

FIG. 10

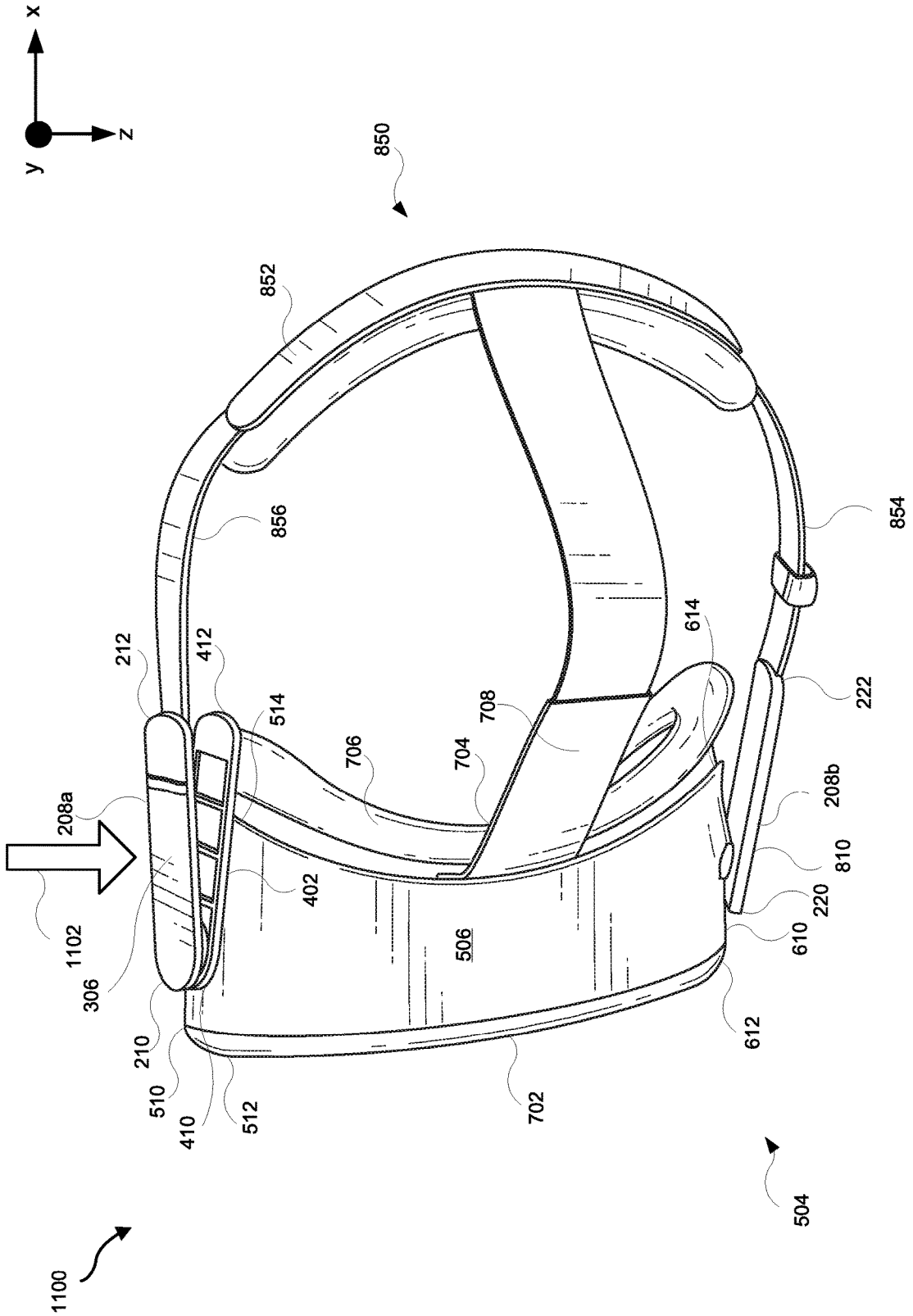
x
y
z
850
852
856
854
212
412
514
706
704
708
614
222
208a
208b
810
220
610
612
402
506
1102
306
210
510
410
512
702
504
1100

FIG. 11

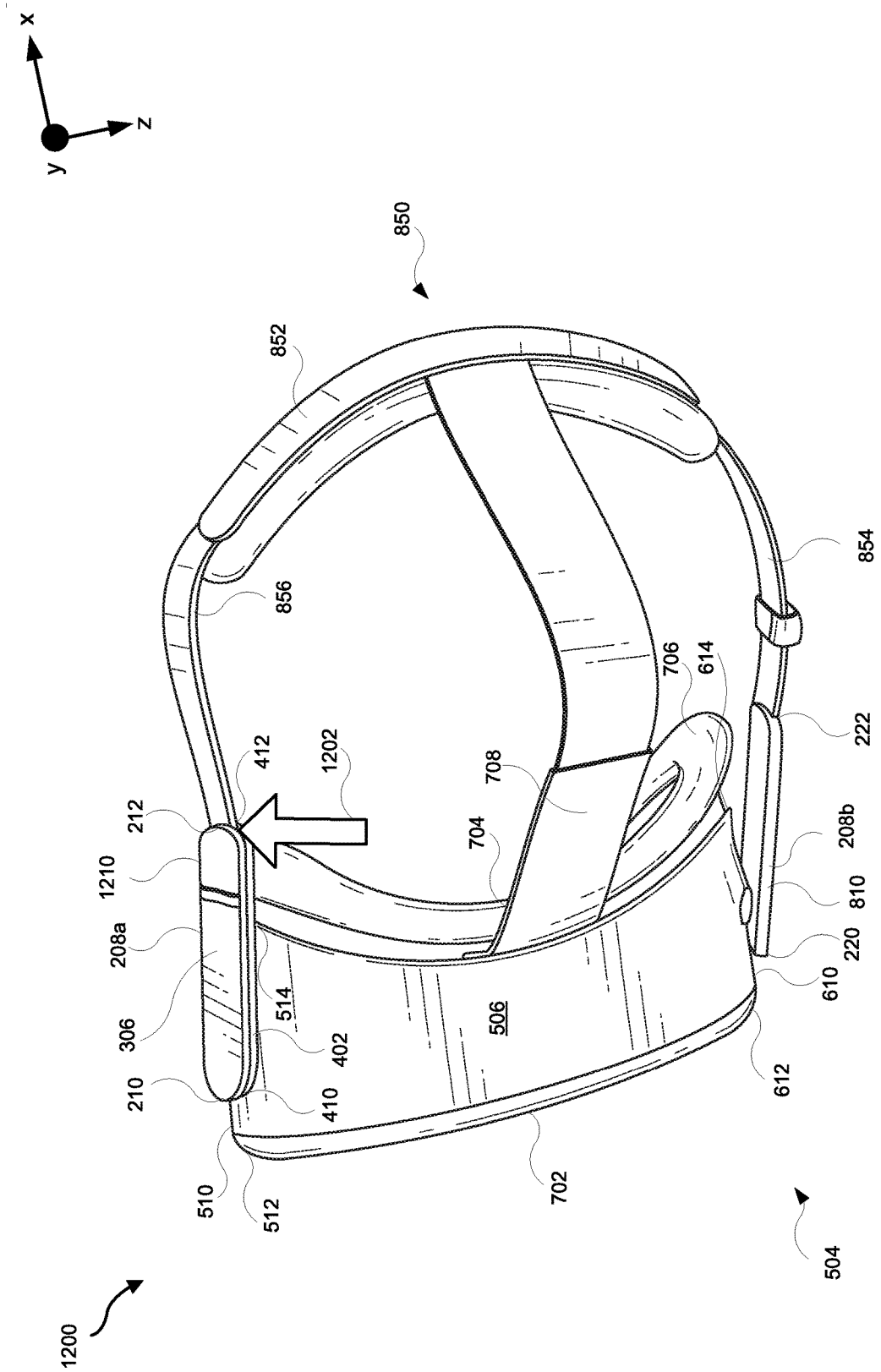
x
y
z
850
852
856
854
222
208b
810
220
610
612
504
702
506
704
708
706
614
1202
412
212
1210
208a
306
514
402
410
210
510
512
1200

FIG. 12

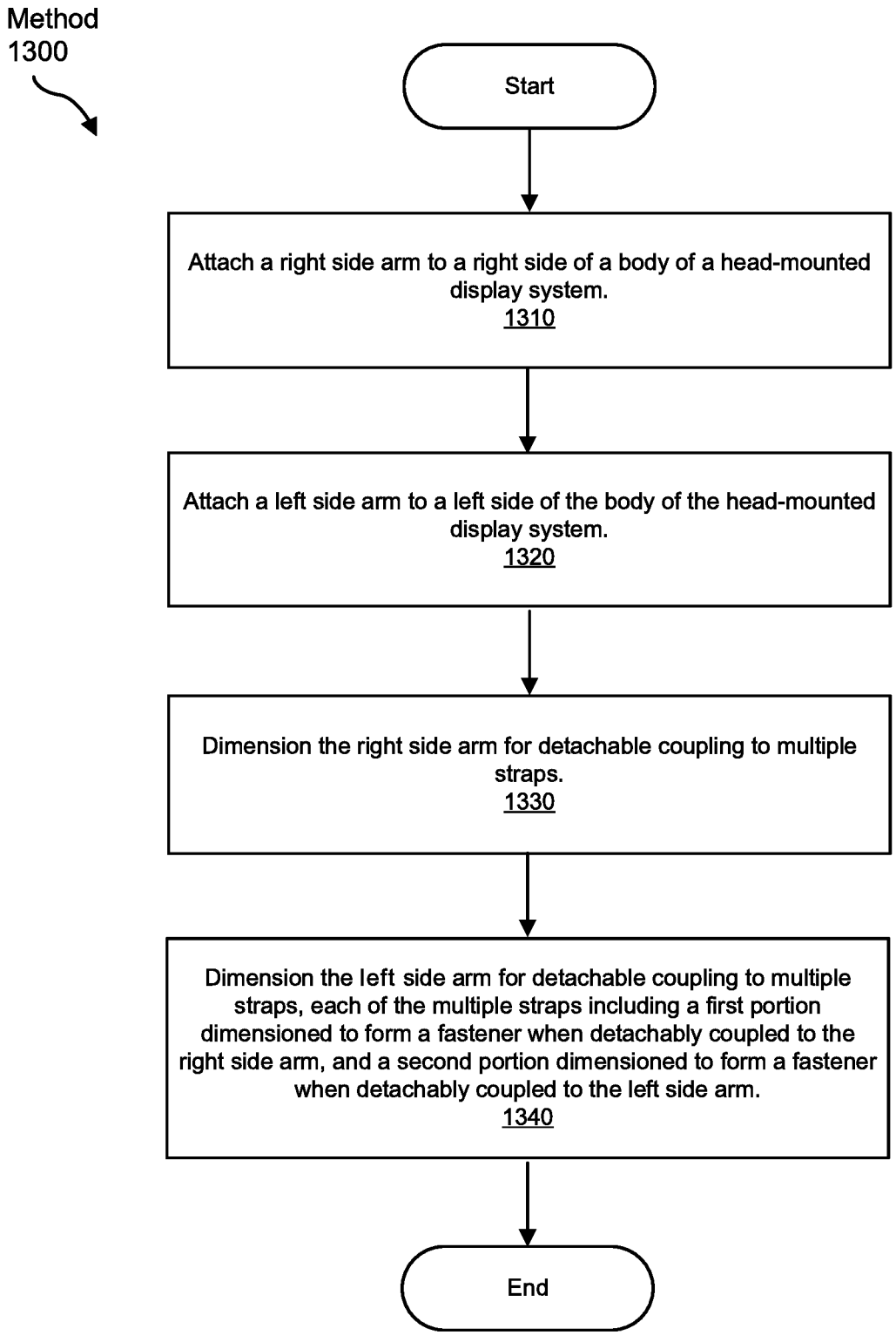
Method
1300
Start
Attach a right side arm to a right side of a body of a head-mounted display system.
1310
Attach a left side arm to a left side of the body of the head-mounted display system.
1320
Dimension the right side arm for detachable coupling to multiple straps.
1330
Dimension the left side arm for detachable coupling to multiple straps, each of the multiple straps including a first portion dimensioned to form a fastener when detachably coupled to the right side arm, and a second portion dimensioned to form a fastener when detachably coupled to the left side arm.
1340
End

FIG. 13

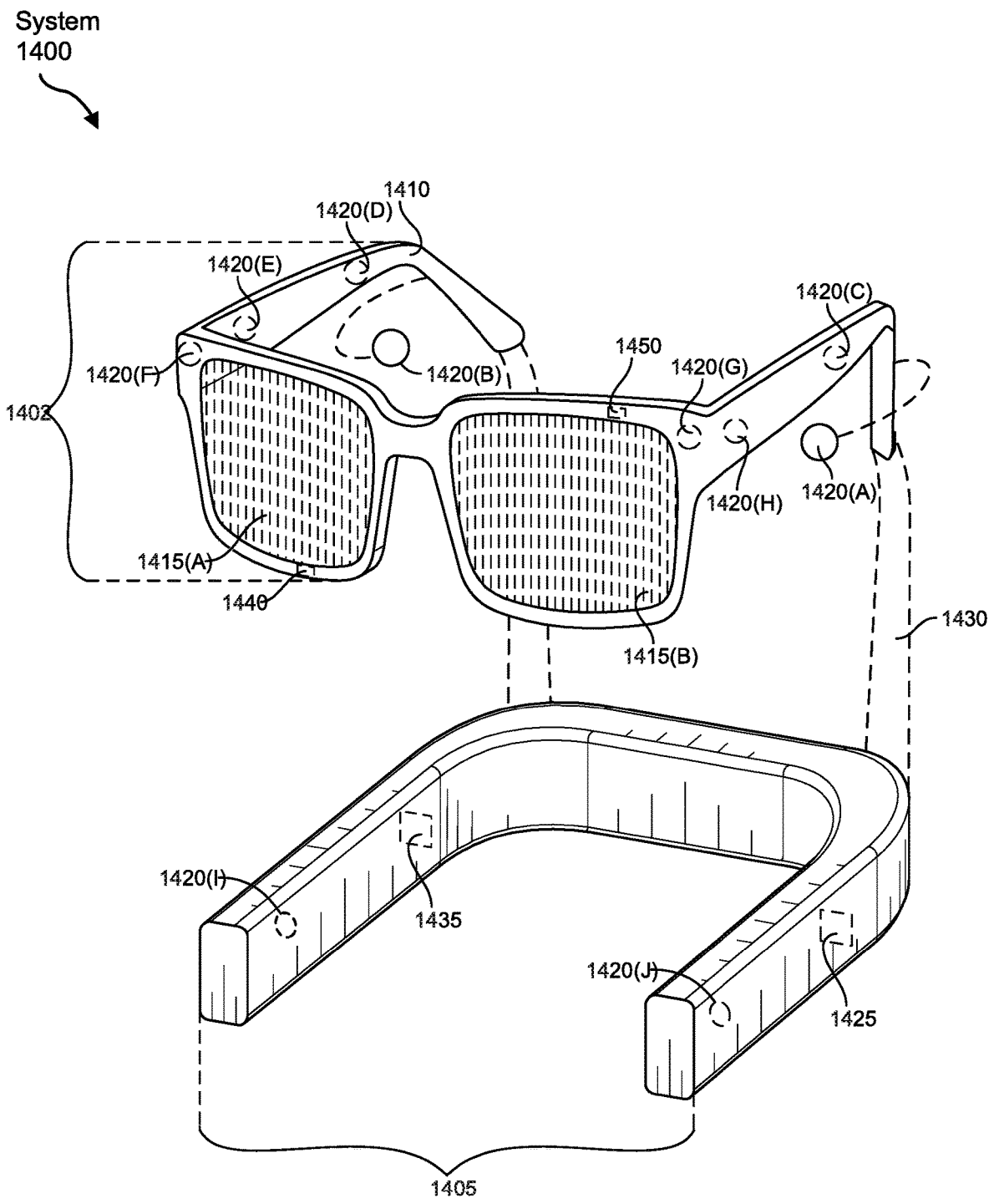
System
1400
1410
1420(D)
1420(E)
1420(C)
1420(F)
1420(B)
1450
1420(G)
1402
1420(H)
1420(A)
1415(A)
1440
1415(B)
1430
1420(I)
1435
1420(J)
1425
1405

FIG. 14

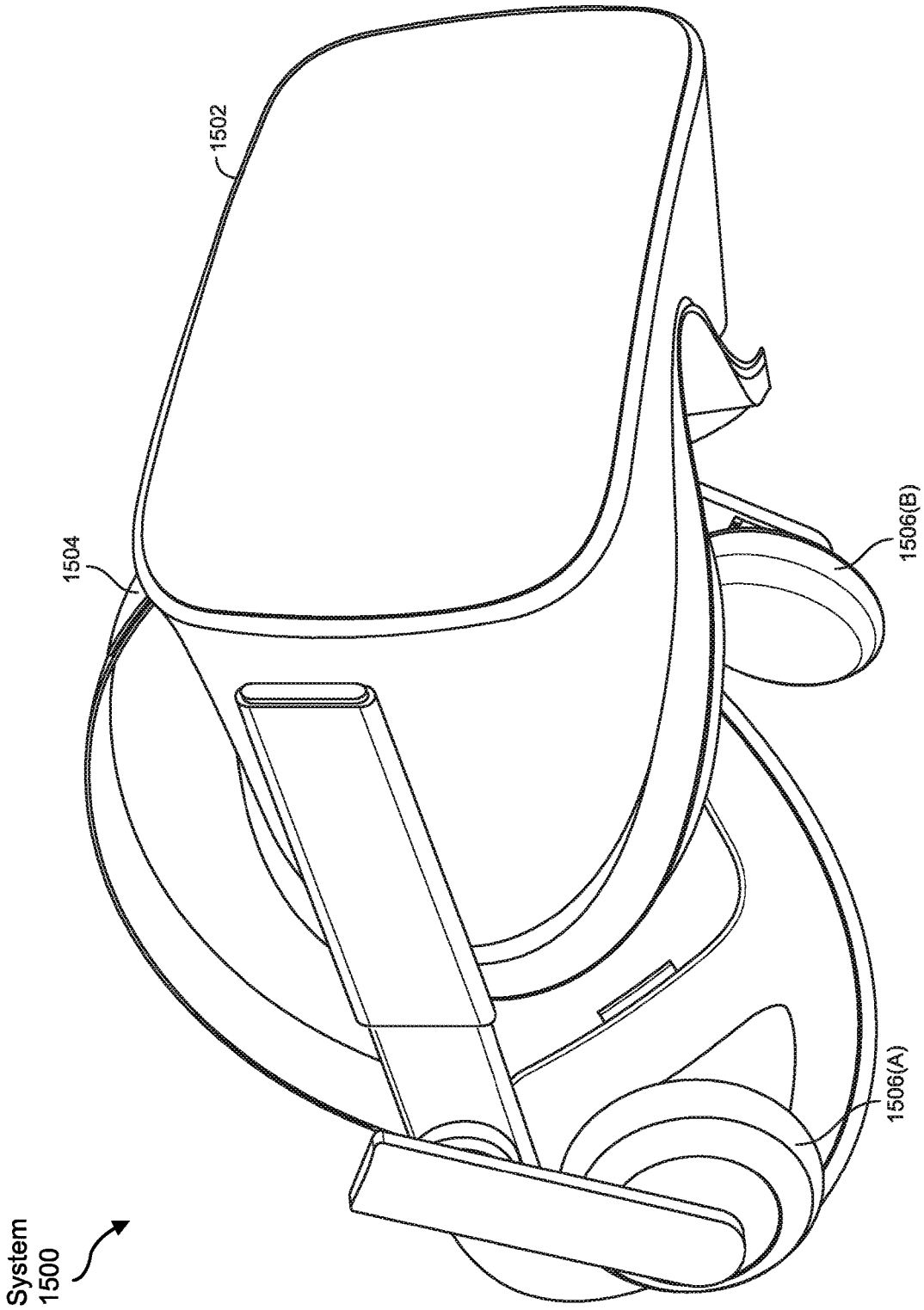

FIG. 15

SWAPPABLE STRAP FOR A HEAD-MOUNTED DISPLAY SYSTEM

BRIEF DESCRIPTION OF THE DRAWINGS

[0001] The accompanying drawings illustrate a number of exemplary embodiments and are a part of the specification. Together with the following description, these drawings demonstrate and explain various principles of the present disclosure.

[0002] FIG. **1** is an illustration of an example strap and an example strap end snap piece.

[0003] FIG. **2** is an illustration of a perspective view of formed ends of a strap fitted into respective strap end snap pieces forming respective snap piece assemblies.

[0004] FIG. **3**A is an illustration of a perspective view of a snap piece assembly.

[0005] FIG. **3**B is an illustration of a perspective view of another snap piece assembly.

[0006] FIG. **4** is an illustration of a perspective view of a side arm of a head-mounted display system.

[0007] FIG. **5** is an illustration of a perspective view of a head-mounted display system.

[0008] FIG. **6** is an illustration of another perspective view of a head-mounted display system.

[0009] FIG. **7** is an illustration of a perspective view of an example body of a head-mounted display system.

[0010] FIGS. **8-12** show various perspective views of the connecting of a detachable strap system in a head-mounted display system.

[0011] FIG. **13** is a flow diagram of an exemplary method for manufacturing, assembling, using, adjusting, or otherwise configuring or creating a body of a head-mounted display system for detachable connection to detachable strap assemblies

[0012] FIG. **14** is an illustration of exemplary augmented-reality glasses that may be used in connection with embodiments of this disclosure.

[0013] FIG. **15** is an illustration of an exemplary virtual-reality headset that may be used in connection with embodiments of this disclosure.

[0014] Throughout the drawings, identical reference characters and descriptions indicate similar, but not necessarily identical, elements. While the exemplary embodiments described herein are susceptible to various modifications and alternative forms, specific embodiments have been shown by way of example in the drawings and will be described in detail herein. However, the exemplary embodiments described herein are not intended to be limited to the particular forms disclosed. Rather, the present disclosure covers all modifications, equivalents, and alternatives falling within the scope of the appended claims.

DETAILED DESCRIPTION OF EXEMPLARY EMBODIMENTS

[0015] A head-mounted display (HMD) system may be donned by a user so that a body of the head-mounted display system may mostly or completely cover a field of view of the user and a display device coupled to the body may be positioned to display content to the user. A band or strap shaped to fit around a head of the user may be detachably connected to side arms included on a right side and a left side of the body of the head-mounted display system. The detachable connection of the strap to the side arms of the body of the head-mounted display device may form a fastener at the right side and a fastener at the left side of the body of the head-mounted display device. The detachable strap, which also may be referred to as a swappable strap, may facilitate a secure and comfortable placement of the head-mounted display system on the head of the user. The detachable strap may be made of a flexible material that may be adjusted to position and hold the body of the head-mounted display system over the field of view of the user allowing the user to view the content displayed by the display device.

[0016] In some implementations, it may be advantageous for the body of the head-mounted display system to be configured to connect to more than one type of strap. It may also be advantageous for the body of the head-mounted display system to be configured to connect to multiple different straps and/or for a detachable strap to be configured to connect to multiple head-mounted display systems. Including side arms on each side of the body that are dimensioned to be detachably coupled to a respective snap piece included on each end of a strap may allow swappable straps that may be interchangeably attached to and detached from the body of the head-mounted display system. The ability to easily attach a strap to and detach a strap from a body of a head-mounted display system may ease manufacturing constraints for the head-mounted display system. In addition, or in the alternative, it may be more desirable for a user of the head-mounted display system to detach a strap from the body, adjust the strap for a secure and comfortable fit, and then to re-attach the strap to the body of the head-mounted display system. Furthermore, embodiments of this disclosure may allow users to select different straps, replace worn-out straps, swap straps for different users, and/or remove straps for cleaning.

[0017] The present disclosure is generally directed to systems and methods for making and using head-mounted display systems that may include side arms dimensioned for detachably coupling to snap piece assemblies included on portions of a swappable strap. The snap piece assemblies may be dimensioned for detachably coupling to each of the respective side arms. The side arms may be attached to sides of a body of the head-mounted display system. The detachable coupling of a portion of a swappable strap to a side arm of a body of a head-mounted display system may be performed by positioning a top of a snap piece assembly of the swappable strap on an upper end of a side arm, positioning a bottom of the snap piece assembly on a lower end of the side arm, and applying a force to an upper side of the snap piece assembly. The assembly may be configured such that the applied force may attach or snap the swappable strap to the side arms of the body of the head-mounted display system resulting in the formation of fasteners at each side of the body of the head-mounted display system.

[0018] As will be explained in greater detail below, embodiments of the present disclosure may include a head-mounted display system including a body, a display device coupled to the body, a right side arm coupled to a right side of the body and extending toward a back of the right side of the body, and a left side arm coupled to a left side of the body and extending toward a back of the left side of the body. The right side arm may be dimensioned to be detachably coupled to a first portion of the strap. The left side arm may be dimensioned to be detachably coupled to a second portion of the strap. The display device may be coupled to the body

such that, when the head-mounted display system is donned by a user, the display device is positioned to display content to the user.

[0019] Features from any of the embodiments described herein may be used in combination with one another in accordance with the general principles described herein. These and other embodiments, features, and advantages will be more fully understood upon reading the following detailed description in conjunction with the accompanying drawings and claims.

[0020] In the following description, the discussion corresponding to FIGS. **1**, **2**, and **3** covers strap end snap pieces and strap end snap piece assemblies, the discussion corresponding to FIGS. **4-7** covers side arms for a body of a head-mounted display system. Furthermore, the discussion corresponding to FIGS. **8-12** covers detachably coupling strap end snap piece assemblies of a detachable strap to respective side arms on a body of a head-mounted display system.

[0021] FIG. **1** is an illustration of an example strap **102** and an example strap end snap piece **104**. The strap **102** may include a formed end **106** that may be finished and dimensioned for coupling or attaching to the strap end snap piece **104**. A shaped front end **108** of strap end snap piece **104** may be dimensioned to fit or accept the formed end **106** of the strap **102**. In some implementations, for example, the formed end **106** may be cut and finished to provide a smooth finished end to the strap **102** without any fraying. In addition, or in the alternative, the formed end **106** may be cut and finished such that it is dimensioned for coupling to the strap end snap piece **104**.

[0022] A formed end of a strap may be of various geometric shapes and dimensions. A shaped front end of a strap end snap piece may be dimensioned accordingly to accommodate, fit, or accept the formed end of the strap. Additionally, or alternatively, a formed end of a strap may also be dimensioned accordingly to fit into a strap end snap piece. The formed end **106** of the strap **102**, as shown in FIG. **1** is rounded; however, in some implementations, a formed end of a strap may be square, straight, triangular, or any other geometric shape. The formed end **106** of the strap **102** may be dimensioned so that it fits into the strap end snap piece **104**. For example, the strap **102** may be dimensioned such that a width **114** of the strap **102** is such that it may be accommodated in the strap end snap piece **104** based on an inner width **116** of the strap end snap piece **104**.

[0023] The coupling of the formed end **106** of the strap **102** to the strap end snap piece **104** may be performed in a variety of ways. For example, the formed end **106** of the strap **102** may be coupled to the strap end snap piece **104** in such a way that at least a portion of the end of the strap **102** including the formed end **106** is affixed to at least a portion of the strap end snap piece **104**. In another example, the formed end **106** of the strap **102** may be coupled to the strap end snap piece **104** in such a way that a portion of the end of the strap **102** including the formed end **106** is affixed to the entire strap end snap piece **104**.

[0024] A strap may be made or formed of a variety of materials or fabrics that may provide a band that may be shaped and/or adjusted to fit around a head of a user. In some implementations, a strap may be made or formed of a flexible, soft, and/or non-rigid type of fabric. In some implementations, a strap may be made or formed of a hard, a semi-hard, or a soft material. For example, the materials may be a type of woven fabric, an elastic, a knitted fabric, a fibrous fabric, or a webbing. Furthermore, the fabric may be made from any suitable material, including nylon, rayon, polypropylene, thermoplastic polyurethane (TPU) plastic, an elastomer, or other polymeric materials.

[0025] A strap end snap piece may be attached, coupled, connected, or affixed to an end of a strap using a variety of techniques. The portion of an end of the strap **102** that includes the formed end **106** may be bonded to the strap end snap piece **104** using one or more of an adhesive substance, heat, and pressure. In some implementations, the adhesive substance may be a thermoset adhesive. In some implementations, the portion of an end of the strap **102** that includes the formed end **106** may be bonded to the strap end snap piece **104** by curing a bonding agent applied to the connection of the portion of the end of the strap **102** and the strap end snap piece **104** with heat and/or pressure. In some implementations, the adhesive substance may include glues, epoxies, or various plastic agents that may bond the strap end snap piece **104** to the portion of the end of the strap **102** that includes the formed end **106** by evaporation of a solvent applied to the connection of the portion of the end of the strap **102** and the strap end snap piece **104**.

[0026] The strap end snap piece **104** may be formed and dimensioned to provide a physical interface for mateably and demateably engaging with a respective interface of a connector or other type of interface piece of an object. The strap end snap piece **104** may be dimensioned having an outer edge **118** with an outer edge width **120**, an outer width **112**, an inner width **116**, and a length **110**. The length **100**, the outer width **112** and/or the inner width **116** may be any suitable dimension. For example, the length **110** may be approximately between five centimeters and ten centimeters. The outer width **112** may be approximately between twelve millimeters and fifty millimeters. The inner width **116** may be of a width to accommodate the width **114** of the strap **102**. For example, the inner width **116** may be approximately equal to the width **114** of the strap **102**. The width **114** of the strap **102** may be approximately between ten millimeters and fifty millimeters. The outer width **112** and the inner width **116** may each be dimensioned such that the outer edge width **120** may provide a physical interface for mateably and demateably engaging with a respective interface of a connector attached to an object.

[0027] A strap end snap piece affixed to an end of a flexible strap may provide a rigidity, stiffness, and/or a lifter to the end of the strap to facilitate the detachable connecting and disconnecting of the strap to an object. A strap may be made or formed of a flexible, soft, and/or non-rigid type of material or fabric. The strap end snap piece **104** may be a hard good made of a hard or semi-hard type of material providing a rigidity to an end of a strap making it easier to attach and detach the end of the strap by detachably coupling the strap end snap piece **104** to a connector on an object dimensioned to interface with the strap end snap piece **104**. For example, the hard, semi-hard, or rigid material may be a type of plastic, metal, textile, or fine ceramic that exhibits little to no bending or flexing when a force is applied to the strap end snap piece when connecting the strap to a connector included on an object.

[0028] FIG. **2** is an illustration of a perspective view **200** of formed ends **206***a-b* of a strap **202** fitted into respective strap end snap pieces **204***a-b*, thereby forming snap piece assemblies **208***a-b*, respectively. The perspective view **200**

may be from an underside or back of the snap piece assemblies **208***a-b*. The strap **202** shown in FIG. **2** may be an exemplary configuration of the strap **102** shown in FIG. **1**. Each snap piece assembly may include a top, a bottom, and an outer edge. Referring also to FIG. **1**, an outer edge **218** and an outer edge **228** of respective snap piece assemblies **208***a-b* may be the outer edge **118** as described for the strap end snap piece **104** in FIG. **1**. The snap piece assembly **208***a* may include a top **210** and a bottom **212**. The snap piece assembly **208***b* may include a top **220** and a bottom **222**.

[0029] A strap may have more than one formed end (e.g., two or more) that may be affixed to a respective strap end snap piece. The strap **202** may include a first portion **250***a* and a second portion **250***b*, and each portion may include a formed end (e.g., formed end **206***a* and formed end **206***b*, respectively). Each formed end **206***a-b* may be affixed to a respective strap end snap piece **204***a-b*, resulting in snap piece assemblies **208***a-b*, respectively. For example, each formed end **206***a-b* may be coupled, attached, or affixed to the respective strap end snap piece **204***a-b* as described with reference to the coupling, attaching, affixing, and connecting of the portion of the strap that includes the formed end **106** to the strap end snap piece **104** as described in FIG. **1**. Referring to FIG. **2**, the first portion **250***a* of the strap **202** may be affixed to the strap end snap piece **204***a* from a top location **214** of the strap end snap piece **204***a* to the bottom **212** of the strap end snap piece **204***a*. In some implementations, affixing the first portion **250***a* of the strap **202** to the strap end snap piece **204***a* may begin at the top location **214** and may end before the bottom **212** of the strap end snap piece **204***a*. Referring to FIG. **2**, the second portion **250***b* of the strap **202** may be affixed to the strap end snap piece **204***b* from a top location **224** of the strap end snap piece **204***b* to the bottom **222** of the strap end snap piece **204***b*. In some implementations, affixing the second portion **250***b* of the strap **202** to the strap end snap piece **204***b* may begin at the top location **224** and may end before the bottom **222** of the strap end snap piece **204***b*.

[0030] FIG. **3**A is an illustration of a perspective view **300** of the snap piece assembly **208***a*. Referring to FIG. **2**, the perspective view **300** shows the top **210** of the snap piece assembly **208***a* and the top location **214** of the strap end snap piece **204***a* where the formed end **206***a* of the first portion **250***a* of the strap **202** is affixed to the strap end snap piece **204***a*. Referring to FIGS. **1** and **2**, the perspective view **300** shows the outer edge **218** having outer edge width **316** (e.g., the outer edge width **120** as shown in FIG. **1**). The perspective view **300** shows a front side **306** and a back side **308** of the snap piece assembly **208***a*. The perspective view **300** may be a cross-sectional view of the snap piece assembly **208***a*.

[0031] FIG. **3**B is an illustration of a perspective view **350** of the snap piece assembly **208***b*. Referring to FIG. **2**, the perspective view **350** shows the top **220** of the snap piece assembly **208***b* and the top location **224** of the strap end snap piece **204***b* where the formed end **206***b* of the second portion **250***b* of the strap **202** is affixed to the strap end snap piece **204***b*. Referring to FIGS. **1** and **2**, the perspective view **350** shows the outer edge **228** having an outer edge width **318** (e.g., the outer edge width **120** as shown in FIG. **1**). The perspective view **350** shows a front side **356** and a back side **358** of the snap piece assembly **208***b*. The perspective view **350** may be a cross-sectional view of the snap piece assembly **208***b*.

[0032] A snap piece assembly may be coupled or attached to a connector dimensioned for interfacing with the snap piece assembly. Referring to the snap piece assembly **208***a* as shown in FIGS. **2** and **3**A, the outer edge **218** of the strap end snap piece **204***a* may be of a formed end shaped to include a lip **302** of a width **304** that may be dimensioned to fit over, fit around, or snap around an outer edge of a connector. The outer edge of the connector may be a formed edge of the connector dimensioned and/or shaped to fit within the outer edge **218** of the strap end snap piece **204***a*. When the outer edge **218** of the strap end snap piece **204***a* is coupled to the edge of the connector, the snap piece assembly **208***a* may be attached, coupled, connected, or snapped onto the connector. Referring to the snap piece assembly **208***b* as shown in FIGS. **2** and **3**B, the outer edge **228** of the strap end snap piece **204***b* may be of a formed end shaped to include a lip **352** of a width **354** that may be dimensioned to fit over, fit around, or snap around an outer edge of a connector. The outer edge of the connector may be a formed edge of the connector dimensioned and/or shaped to fit within the outer edge **228** of the strap end snap piece **204***b*. When the outer edge **228** of the strap end snap piece **204***b* is coupled to the edge of the connector, the snap piece assembly **208***b* may be attached, coupled, connected, or snapped onto the connector. Examples of connections of this type will be described herein and in particular with reference to FIGS. **5** and **6**.

[0033] A snap piece assembly may be decoupled or detached from a connector dimensioned for interfacing with the snap piece assembly. Referring to the snap piece assembly **208***a* as shown in FIGS. **2** and **3**A, once connected, the outer edge **218** of the strap end snap piece **204***a* may be decoupled, detached, disconnected, or unsnapped from the connector by removing the outer edge **218** of the strap end snap piece **204***a* from being position over or around the outer edge of the connector. Referring to the snap piece assembly **208***b* as shown in FIGS. **2** and **3**B, once connected, the outer edge **228** of the strap end snap piece **204***b* may be decoupled, detached, disconnected, or unsnapped from the connector by removing the outer edge **228** of the strap end snap piece **204***b* from being positioned over or around the other formed end or lip of the connector. Examples of disconnections of this type will be described herein and in particular with reference to FIGS. **5** and **6**.

[0034] A strap, when connected to one or more connectors included, attached, affixed, or otherwise incorporated into an object, a system, a device and/or an apparatus, may connect two objects, may connect two parts of a system, device, or apparatus, and/or may hold an object in place. A first snap piece assembly may be detachably coupled to a first connector of an object and a second snap piece assembly may be detachably coupled to a second connector of the object. The first connector may be dimensioned for interfacing with and connecting to the first snap piece assembly. The second connector may be dimensioned for interfacing with and connecting to the second snap piece assembly. For example, referring to FIGS. **5**-**15**, a strap may be incorporated as part of a head-mounted display system that includes two connectors as side arms of the head-mounted display system. A strap of a head-mounted display system may provide the

necessary connections to the side arms of the head-mounted display system facilitating the wearing of the head-mounted display system by a user.

[0035] FIG. **4** is an illustration of a perspective view **400** of an example side arm **402** of a head-mounted display system. The side arm **402** may include an upper end **410**, a lower end **412**, a first side **414**, and a second side **416**. The side arm **402** may be surrounded by an outer edge **418** of a width **420**. As described herein, and in particular with reference to FIGS. **2**, **3**A, and **3**B, the outer edge **418** may be a formed edge of the side arm **402** dimensioned and/or shaped to fit within an outer edge (e.g., the outer edge **218** and/or the outer edge **228**) of a strap end snap piece (e.g., the strap end snap piece **204***a* and/or the strap end snap piece **204***b*, respectively).

[0036] A side arm may function as a connector that may be detachably coupled to a snap piece assembly as described herein and in particular with reference to FIGS. **2**, **3**A, and **3**B. The side arm **402** may be detachably coupled to a snap piece assembly. For example, the side arm **402** may be detachably coupled to the snap piece assembly **208***a*. The lip **302** of the snap piece assembly **208***a* may fit over, around, and/or may snap onto the outer edge **418** of the side arm **402**, thereby coupling, connecting, or attaching the snap piece assembly **208***a* to the side arm **402**. Additionally, or alternatively, the lip **352** of the snap piece assembly **208***b* may fit over, around, and may snap onto the outer edge **418** of the side arm **402**, thereby coupling, connecting, or attaching the snap piece assembly **208***b* to the side arm **402**. Additionally, or alternatively, the snap piece assembly **208***a* may be detachably coupled to the side arm **402** and the snap piece assembly **208***b* may be detachably coupled to another side arm similar to the side arm **402**. Such examples will be shown with reference to FIGS. **5** to **12**.

[0037] A side arm may be attached to a side of a head-mounted display system so as to surround, encompass, or house an electronic component **422** of the head-mounted display system. Referring to FIG. **4**, the electronic component **422** may be an audio component that provides audio content to a user when the user dons or wears the head-mounted display system on a head of the user. In some implementations, the electronic component **422** may be an audio transducer configured to deliver or output audio content (e.g., sound). An audio transducer may perform the functions of an audio speaker. Examples of audio transducers may include, but are not limited to, voice coil speakers, ribbon speakers, electrostatic speakers, piezoelectric speakers, bone conduction transducers, cartilage conduction transducers, tragus-vibration transducers, and/or any other suitable type or form of audio transducer. In some implementations, the electronic component **422** may be a transducer that may be used for both audio input and audio output performing the functions of a speaker and a microphone.

[0038] The ends of a side arm may be implemented in a variety of configurations. In the example shown in FIG. **4**, the upper end **410** and the lower end **412** of the side arm **402** may provide rounded ends to the side arm **402**. In some implementations, an end of a side arm may be flat or squared-off (of a square shape). In some implementations, each end of a side arm may be formed or finished in the same way. For example, as shown if FIG. **4**, the upper end **410** and the lower end **412** are both rounded ends. In some implementations, each end of a side arm may be formed differently. For example, an upper end of a side arm may be rounded, and a lower end of a side arm may be squared-off. In another example, an upper end of a side arm may be squared-off, and a lower end of a side arm may be rounded.

[0039] A side arm may be formed with one or more cut-out sections. For example, the side arm **402** may include cut-outs **426***a-c*. In addition, the side arm may include cut-out **424** dimensioned to accommodate the electronic component **422**. The cut-outs **426***a-c* and the cut-out **424** may reduce a weight and/or a mass of the side arm **402**. Referring to FIGS. **5-11**, a reduced weight and/or mass of the side arm **402** may benefit an overall weight on a head-mounted display device, providing a lighter-weight more comfortable device for donning by a user. In some implementations, providing one or more cut-outs in a side arm may make the detachable coupling of a strap, and in particular snap end assemblies of a strap, to the side arms easier for the manufacturing and for a user of the head-mounted display system when attaching and detaching a strap from a body of the head-mounted display system, which will be described in more detail herein, and in particular with reference to FIGS. **5** and **8-12**.

[0040] A side arm may be formed with a single cut-out area for accommodating an electronic component. For example, a side arm may include the cut-out **424** dimensioned to accommodate the electronic component **422**. The remainder of the side arm may be a solid piece that may not include any cut outs. In these implementations, such a side arm may provide a sturdier, more rigid connection between a strap, and in particular a snap end piece of the strap and the head-mounted display system.

[0041] FIG. **5** is an illustration of a perspective view **500** of a head-mounted display system **504**. The perspective view **500** shows one side (e.g., a right side) of the head-mounted display system **504**. Referring to FIG. **4**, the side arm **402** may be attached, affixed, connected, or otherwise coupled to a body **506** of the head-mounted display system **504**. The body **506** may include the electronic component **422**. As described herein, and in particular with reference to FIGS. **2**, **3**A, **4**, and **7-12**, the snap piece assembly **208***a* may be connected to the side arm **402** connecting an end of the strap **202** to the body **506** of the head-mounted display system **504**.

[0042] A side arm may be attached to a body of a head-mounted display system such that the side arm may extend toward a back of the side of the body. As described herein, and in particular with reference to FIGS. **4** and **5**, the side arm **402** may be attached to the body **506** of the head-mounted display system **504** on a right side **510** of the body **506**. The side arm **402** may be attached to the body **506** such that the upper end **410** of the side arm **402** and, in particular the cut out **424**, is positioned over the electronic component **422** positioning the upper end **410** of the side arm **402** towards a front **512** of the right side **510** of the head-mounted display system **504** with the lower end **412** of the side arm **402** extending towards a back **514** of the right side **510** of the head-mounted display system **504**.

[0043] FIG. **6** is an illustration of another perspective view **600** of the head-mounted display system **504**. The perspective view **600** shows another side (e.g., a left side) of the head-mounted display system **504**. A side arm **650** may be configured the same as the side arm **402**. The side arm **650** may be attached, affixed, connected, or otherwise coupled to the body **506** of the head-mounted display system **504**. The body **506** may include an electronic component **622**. As

described herein, and in particular with reference to FIGS. **2**, **3**B, **4**, and **7-12**, the snap piece assembly **208***b* may be connected to the side arm **650** connecting an end of the strap **202** to the body **506** of the head-mounted display system **504**.

[0044] A side arm may be attached to a body of a head-mounted display system such that the side arm may extend toward a back of the side of the body. Referring to FIGS. **4** and **6**, the side arm **650** may be attached to the body **506** of the head-mounted display system **504** on a left side **610** of the body **506**. The side arm **650** may be attached to the body **506** such that an upper end **660** of the side arm **650** and, in particular a cutout **664**, is positioned over the electronic component **622**, thereby positioning an upper end **660** of the side arm **650** towards a front **612** of the left side **610** of the head-mounted display system **504** with a lower end **662** of the side arm **650** extending towards a back **614** of the left side **610** of the head-mounted display system **504**.

[0045] Referring to FIG. **4**, the electronic component **422** may be an audio component that provides audio content to a user when the user dons or wears the head-mounted display system on a head of the user. In some implementations, the electronic component **422** may be an audio transducer (e.g., a speaker) configured to deliver or output audio content. Examples of audio transducers may include, but are not limited to, voice coil speakers, ribbon speakers, electrostatic speakers, piezoelectric speakers, bone conduction transducers, cartilage conduction transducers, tragus-vibration transducers, and/or any other suitable type or form of audio transducer. In some implementations, the electronic component **422** may be a transducer that may be used for both audio input and audio output performing the functions of a speaker and a microphone. Alternatively, electronic component **422** may be configured to function only as a speaker.

[0046] FIG. **7** is an illustration of a perspective view **700** of an example body (e.g., the body **506** as shown in FIGS. **5** and **6**) of a head-mounted display system (e.g., the head-mounted display system **504** as shown in FIGS. **5** and **6**). The head-mounted display system **504** includes a facial interface cushion **706** and an upper strap **708**. The body **506** includes a front **702** and a back **704**. Referring to FIGS. **4**, **5**, and **6**, the perspective view **700** shows a top view of the body **506** of the head-mounted display system **504** with a side arm (e.g., the side arm **402** and the side arm **650**) attached to the right side **510** and the left side **610**, respectively, of the body **506**.

[0047] The head-mounted display system **504** may be worn by a user by placing the body **506** on a head of the user so that the body **506** completely covers a field of view of the user, and the facial interface cushion **706** rests comfortably against a region (e.g., a forehead) of a face of the user. When worn in this manner by the user, with the side arm **402** and the side arm **650** being located over the respective electronic component **422** and electronic component **622** located on the right side **510** and the left side **610**, respectively, of the body **506**, the body **506** of the head-mounted display system **504** may be positioned on the head of the user so that the lower end **412** of the side arm **402** extends towards the back **704** of the head-mounted display system **504** and specifically towards the back **514** of the right side **510** of the head-mounted display system **504**, and that the lower end **662** of the side arm **650** extends towards the back **704** of the head-mounted display system **504** and specifically towards the back **614** of the left side **610** of the head-mounted display system **504**.

[0048] FIGS. **8-12** show various perspective views of the connecting of a detachable strap system in a head-mounted display system. As described herein, and in particular with reference to FIGS. **2-7**, a detachable strap system may include one or more straps or strap assemblies that may each include a snap piece assembly for connecting, coupling, attaching, or affixing to a respective one of side arms of a body of a head-mounted display system.

[0049] A detachable strap system may include one or more straps or strap assemblies. As described herein, and in particular with reference to FIGS. **8-12**, a detachable strap system **850** may include the upper strap **708**. In some implementations, the detachable strap system **850** may further include a left lower strap **854** and a right lower strap **856**. An end of the right lower strap **856** may include the snap piece assembly **208***a*. An end of the right lower strap **856** may include the snap piece assembly **208***b*. In some implementations, the left lower strap **854** may be the one of the first portion **250***a* or the second portion **250***b* of the strap **202** and the right lower strap **856** may be the other of the first portion **250***a* or the second portion **250***b* of the strap **202**.

[0050] A detachable strap system may facilitate the wearing of the head-mounted display system **504** by a user. For example, the detachable strap system **850** may be used to mount the body **506** of the head-mounted display system **504** on a head of a user. In some implementations, the detachable strap system **850** may adjustably conform to the top and/or sides of the head of the user when the user is wearing the head-mounted display system **504**. In some embodiments, the detachable strap system **850** may include a back piece **852** that may be attached, connected, or otherwise coupled to the upper strap **708**, the left lower strap **854**, and the right lower strap **856**. When worn by the user, the back piece **852** may rest against a back of the head of the user (e.g., around the occipital lobe of the user).

[0051] FIG. **8** is an illustration of a perspective **800** of connecting the detachable strap system **850** in the head-mounted display system **504**. As shown in FIG. **8**, the snap piece assembly **208***b* is attached, connected, or snapped onto the side arm **650** on the left side **610** of the body **506** of the head-mounted display system **504** forming a fastener **810**. The snap piece assembly **208***a* has yet to be coupled to the side arm **402** on the right side **510** of the body **506**.

[0052] FIG. **9** is an illustration of another perspective **900** of connecting the detachable strap system **850** in the head-mounted display system **504**. As shown in FIG. **9**, the snap piece assembly **208***b* is attached, connected, or snapped onto the side arm **650** on the left side **610** of the body **506** of the head-mounted display system **504**. The snap piece assembly **208***a* has yet to be coupled to the side arm **402** on the right side **510** of the body **506**. The snap piece assembly **208***a* is being placed in a position over the side arm **402** for detachably coupling (e.g., connecting) the snap piece assembly **208***a* to the side arm **402**.

[0053] FIG. **10** is an illustration of another perspective **1000** of connecting a detachable strap system **850** in the head-mounted display system **504**. As shown in FIG. **10**, the snap piece assembly **208***b* is attached, connected, or snapped onto the side arm **650** on the left side **610** of the body **506** of the head-mounted display system **504**. The top **210** of the snap piece assembly **208***a* may be positioned or placed over

the upper end **410** of the side arm **402**. The top **210** of the snap piece assembly **208***a* may be positioned over the upper end **410** such that the lip **302** of the strap end snap piece **204***a* may fit over or around the outer edge **418** of the side arm **402** at the upper end **410** of the side arm **402**.

[0054] FIG. **11** is an illustration of another perspective **1100** of connecting a detachable strap system **850** in the head-mounted display system **504**. As shown in FIG. **11**, the snap piece assembly **208***b* is attached, connected, or snapped onto the side arm **650** on the left side **610** of the body **506** of the head-mounted display system **504**. The top **210** of the snap piece assembly **208***a* is positioned or placed over the upper end **410** of the side arm **402**. The bottom **212** of the snap piece assembly **208***a* may be positioned further over the lower end **412**.

[0055] A downward force may be applied to a snap piece assembly appropriately positioned on a side arm of a head-mounted display system, snapping the snap piece assembly onto the side arm and attaching an end of a strap to the side arm. For example, a force, as shown by arrow **1102**, may be applied in a downward direction on the front side **306** of the snap piece assembly **208***a*. The application of the force may further attach, couple, connect, or snap the lip **302** of the strap end snap piece **204***a* over or around the outer edge **418** of the side arm **402**.

[0056] The snapping of a snap piece assembly to a side arm may be performed in a way similar to the snapping of a lid onto a container. For example, the lip **302** of the snap piece assembly **208***a* may fit over and around the outer edge **418** of the side arm **402**. Once positioned, a downward force, as shown for example by arrow **1102**, applied to the front side **306** of the snap piece assembly **208***a* may assist in snapping the snap piece assembly **208***a* onto the side arm **402**.

[0057] FIG. **12** is an illustration of another perspective **1200** of connecting a detachable strap system **850** in the head-mounted display system **504**. As shown in FIG. **12**, the snap piece assembly **208***b* is attached, connected, or snapped onto the side arm **650** on the left side **610** of the body **506** of the head-mounted display system **504**. As shown in FIG. **12**, the snap piece assembly **208***a* is completely attached, connected, or snapped onto the side arm **402** on the right side **510** of the body **506** of the head-mounted display system **504** forming a fastener **1210**. The detachable strap system **850** is attached to the body **506** of the head-mounted display system **504**.

[0058] A snap piece assembly may be detached, disconnected, or unsnapped from a side arm of a head-mounted display system. As described herein, and in particular with reference to FIGS. **8-12**, an upward force (as shown by arrow **1202**) applied to the bottom **212** of the snap piece assembly **208***a* may assist in unsnapping the snap piece assembly **208***a* from the side arm **402**, resulting in the positioning of the snap piece assembly **208***b* in relation to the side arm **402** as shown, for example, in FIG. **10**. In some implementations, the snap piece assembly **208***a* may be further detached, disconnected, or unsnapped from the side arm **402** by moving the snap piece assembly **208***a* such that the lip **302** of the strap end snap piece **204***a* is no longer fitted over or around the outer edge **418** of the side arm **402** at the upper end **410** of the side arm **402**. Doing so may completely detach, disconnect, and/or unsnap the snap piece assembly **208***b* from the side arm **402** as shown, for example, in FIG. **9**.

[0059] A fastener may join, affix, or attach two or more items or objects to one another. The attaching may be accomplished by a mechanical connection that allows for a non-permanent connection between the two or more objects. A joining of the two or more objects created by the fastener may be disjoined, disconnected, or dismantled without any damage to the components used for joining the two or more objects to one another. As such, the two or more objects may be attached and detached from one another. In addition, or in the alternative, different objects dimensioned for mechanical connection to one another may be swappably connected and disconnected without incurring any damage to the components used for joining the two or more objects to one another.

[0060] As described herein, fasteners may provide for the detachable connection of a swappable strap to a body of a head-mounted display device. For example, with reference to FIGS. **8-12**, the fastener **810** and the fastener **1210** may provide a detachable connection of the detachable strap system **850** to the side arm **402** and the side arm **650** of the body **506** of the head-mounted display system **504**. The ability to provide a detachable connection of a strap system to a head-mounted display device may allow for the swapping of strap systems that may be connected to a particular head-mounted display device.

[0061] Each snap piece assembly of a strap may be considered a hard goods (or hardgoods) assembly. As described herein, and in particular with reference to FIGS. **2**, **3**A, **3**B, and **5-12**, each formed end **206***a-b* of the strap **202** may be affixed to a respective strap end snap piece **204***a-b* resulting in snap piece assemblies **208***a-b*, respectively. Each snap piece assembly **208***a-b* may provide a hardness, rigidity, or stiffness to each end of the strap **202**. As such, the detachable strap system **850** that includes the snap piece assemblies **208***a-b* may be considered a hard goods assembly for connecting to the body **506** of the head-mounted display system **504**.

[0062] As described herein, a side arm may be attached to a side of a head-mounted display system to surround, encompass, or house an electronic component (e.g., an audio component) of the head-mounted display system. The side arm may function as a connector that may be detachably coupled to a snap piece assembly. When the side arm is connected to the snap piece assembly, output from the electronic component may be directed to a user wearing the head-mounted display system. Each electronic component **422** and **622** may be placed over a respective ear of a user when the head-mounted display system is worn by a user. For example, as described herein and in particular with reference to FIGS. **2**, **3**A, **3**B, and **5-12**, the side arm **402** may be detachably coupled to the snap piece assembly **208***a* and the side arm **650** may be detachably coupled to the snap piece assembly **208***b*. The electronic component **422** and the electronic component **622** may each be audio output components (e.g., speakers). The snap piece assembly **208***a*, when attached to the side arm **402**, may be dimensioned to cover the electronic component **422** and to direct sounds waves from the electronic component **422** to an ear of a user. The snap piece assembly **208***b*, when attached to the side arm **650**, may be dimensioned to cover the electronic component **622** and to direct sounds waves from the electronic component **622** to another ear of the user.

[0063] FIG. **13** is a flow diagram of an exemplary method **1300** for manufacturing, assembling, using, adjusting, or

otherwise configuring or creating a body of a head-mounted display system for detachable connection to detachable strap assemblies. The steps shown in FIG. **13** may be performed by an individual and/or by any suitable manual and/or automated apparatus. In one example, each of the steps shown in FIG. **13** may represent a process that may be represented by multiple sub-steps, examples of which will be provided in greater detail below.

[0064] As illustrated in FIG. **13**, at step **1310** one or more of the systems described herein may attach a right side arm to a right side of a body of a head-mounted display system. A side arm may be attached, affixed, connected, or otherwise coupled to the body of the head-mounted display system. For example, with reference to FIGS. **4**, **5**, and **7-12**, the side arm **402** may be the right side arm attached to the right side **510** of the body **506** of the head-mounted display system **504**.

[0065] In some embodiments, the term "head-mounted display system" may refer to an artificial-reality system that presents to a user a form of reality that has been adjusted in some manner before presentation to a user. Examples of head-mounted display systems may include, without limitation, augmented reality systems, virtual reality systems, head-worn display systems, virtual reality headsets, head-mounted display devices, and headsets. A head-mounted display system may be any type or form of display device or system that is worn on or about a head of a user that may display visual content to the user. A head-mounted display system may display content in any suitable manner using, including, but not limited to, a screen (e.g., a liquid crystal display (LCD) screen or a light-emitting diode (LED) screen), a projector, or an optical mixer. A head-mounted display system may display content in one or more of various media formats. For example, a head-mounted display may display video, photos, and/or computer-generated imagery (CGI).

[0066] A head-mounted display system may provide diverse and distinctive user experiences. Some head-mounted display systems may provide virtual-reality experiences (i.e., they may display computer-generated or pre-recorded content), while other head-mounted display systems may provide real-world experiences (i.e., they may display live imagery from the physical world). A head-mounted display system may also provide any mixture of live and virtual content. For example, virtual content may be projected onto the physical world (e.g., via optical or video see-through), which may result in augmented reality or mixed reality experiences.

[0067] In some embodiments, the term "attach" may refer the securing of one object to another object in order to keep the two objects together. Examples of attaching may include, without limitation, connecting, affixing, fastening, securing, bonding, gluing, tying, nailing, or linking of one object to another. In some cases, the attaching of two objects may result in one object staying firmly in place as related to the other object.

[0068] The systems described herein may perform step **1310** in a variety of ways. In one example, with reference to FIGS. **5** and **7-12**, the side arm **402** may be attached, affixed, connected, or otherwise coupled to the right side **510** of the body **506** of the head-mounted display system **504**.

[0069] As illustrated in FIG. **13**, at step **1320** one or more of the systems described herein may attach the left side arm to a left side of the body of the head-mounted display system. A side arm may be attached, affixed, connected, or otherwise coupled to the body of the head-mounted display system. For example, referring to FIGS. **6-12**, the side arm **650** may be the left side arm attached to the left side **610** of the body **506** of the head-mounted display system **504**.

[0070] The systems described herein may perform step **1320** in a variety of ways. In one example, the side arm **650** may be attached, affixed, connected, or otherwise coupled to the left side **610** of the body **506** of the head-mounted display system **504**. As illustrated in FIG. **13**, at step **1330** one or more of the systems described herein may dimension the right side arm for detachable coupling to multiple straps. For example, referring to FIGS. **4**, **5**, and **7-12**, the side arm **402** may be the right side arm. The right side arm may be detachably coupled to a snap piece assembly of a detachable strap system. For example, the side arm **402** may be detachably coupled to the snap piece assembly **208***a* of the detachable strap system **850**.

[0071] In some embodiments, the term "detachable" may refer to designing an item, object, or device so that it may be detached from another item, object, or device. Doing so allows one item to be removed or separated from another item. For example, the side arm **402** may be designed by dimensioning the side arm **402** for removal or separation from the snap piece assembly **208***a*.

[0072] In some embodiments, the term "strap" may refer to a narrow piece or strip of a flexible material or fabric that may be used to tie, connect, or attach one object to another. A strap may be included in a detachable strap assembly (e.g., the detachable strap assembly **850** as shown in FIGS. **8-12**. The strap may be shaped and/or adjusted to fit around a head of a user when the user is wearing the head-mounted display system **504**.

[0073] Step **1330** may be performed in a variety of ways. In one example, the side arm **402** may be surrounded by an outer edge **418** dimensioned and/or shaped to fit within the outer edge **218** of the strap end snap piece **204***a* included in the snap piece assembly **208***a*.

[0074] As illustrated in FIG. **13**, at step **1340** one or more of the systems described herein may dimension a left side arm for detachable coupling to multiple straps. Each of the multiple straps may include a first portion dimensioned to form a fastener when detachably coupled to the right side arm, and a second portion dimensioned to form a fastener when detachably coupled to the left side arm. For example, referring to FIGS. **6-12**, the side arm **650** may be the left side arm. The left side arm may be detachably coupled to a snap piece assembly of a detachable strap system. For example, the side arm **650** may be detachably coupled to the snap piece assembly **208***b* of the detachable strap system **850** forming the fastener **810**. The side arm **402** may be detachably coupled to the snap piece assembly **208***a* of the detachable strap system **850** forming the fastener **1210**. Referring to FIG. **2**, the strap **202** may include the first portion **250***a* and the second portion **250***b* including the formed ends **206***a-b*, respectively, that may be affixed to a respective strap end snap piece **204***a-b*, resulting in snap piece assemblies **208***a-b*, respectively. Each snap piece assembly **208***a-b* may be dimensioned to form a fastener when detachably coupled to the respective side arm **402** and side arm **650**.

[0075] In some embodiments, the term "fastener" may refer to mechanical connection that may join, affix, or attach two objects to one another (e.g., a body of a head-mounted display device to a portion of a strap). The fastener may

provide a non-permanent connection between the two objects (e.g., the body of a head-mounted display device and the portion of the strap) that may be disconnected without damaging any of the components (e.g., a side arm, the portion of the strap) used to connect the two objects. The two objects (e.g., the body of a head-mounted display device and the portion of the strap) may be attached and detached from one another.

[0076] Step **1340** may be performed in a variety of ways. In one example, the side arm **650** may be surrounded by an outer edge dimensioned and/or shaped to fit within the outer edge **228** of the strap end snap piece **204***b* included in the snap piece assembly **208***b*.

[0077] Including side arms on each side of a body of a first head-mounted display system that are dimensioned to be detachably coupled to a respective snap piece assembly included on each end of a detachable strap system may allow the detachable strap system to be attached and detached from the body of the first head-mounted display system. Dimensioning the side arms on bodies of other head-mounted display systems as dimensioned for the first head-mounted display system allows the other head-mounted display systems to be detachably coupled to the respective snap piece assembly included on each end of the detachable strap system. This provides the advantage of being able to use a single detachable strap assembly on multiple head-mounted display systems.

[0078] Including snap piece assemblies on each end of a first detachable strap system that are dimensioned to be detachably coupled to a respective side arm included on each side of a body of head-mounted display system may allow the first detachable strap system to be to be detachably coupled to the respective side arms of the head-mounted display system. Dimensioning snap piece assemblies of other detachable strap systems as dimensioned for the first detachable strap system allows the other detachable strap systems to be detachably coupled to the respective side arms included on the head-mounted display system. This provides the advantage of the use of a multiple detachable strap assemblies on a single head-mounted display systems providing the advantage for the body of the head-mounted display system to be configured to connect to more than one type of strap.

[0079] The ability to easily attach a detachable strap assembly to and detach a detachable strap assembly from a body of a head-mounted display system may ease manufacturing constraints for the head-mounted display system. In addition, or in the alternative, it may be more desirable for a user of the head-mounted display system to detach a detachable strap assembly from the body, adjust the detachable strap assembly for a secure and comfortable fit, and then to re-attach the detachable strap assembly to the body of the head-mounted display system.

EXAMPLE EMBODIMENTS

[0080] Example 1: A method may include attaching a right side arm to a right side of a body of a head-mounted display system, attaching a left side arm to a left side of the body of the head-mounted display system, dimensioning the right side arm for detachable coupling to multiple straps, and dimensioning the left side arm for detachable coupling to the multiple straps. Each of the multiple straps may include a first portion dimensioned to form a fastener when detachably coupled to the right side arm, and a second portion dimensioned to form a fastener when detachably coupled to the left side arm.

[0081] Example 2: The method of Example 1, where the first portion of each of the multiple straps may include a first snap piece assembly having a first strap end snap piece affixed to a first end of the strap and dimensioned to snap around the right side arm, and a second portion of each of the multiple straps may include a second snap piece assembly having a second strap end snap piece affixed to a second end of the strap and dimensioned to snap around the left side arm.

[0082] Example 3: The method of Examples 1 and 2, where the right side arm may include a right arm outer edge dimensioned to fit within an outer edge of the first snap piece assembly, and the left side arm may include a left arm outer edge dimensioned to fit within an outer edge of the second snap piece assembly.

[0083] Example 4: The method of any of Examples 1-3, where a lip of the outer edge of the first snap piece assembly may be dimensioned for detachably coupling to the right arm outer edge by fitting over the right arm outer edge, and a lip of the outer edge of the second snap piece assembly may be dimensioned for detachably coupling to the left arm outer edge by fitting over the left arm outer edge.

[0084] Example 5: The method of any of Examples 1-4, further including housing an electronic component within at least one of the right side arm or the left side arm.

[0085] Example 6: The method of any of Examples 1-5, where the electronic component may include an audio transducer.

[0086] Example 7: The method of any of Examples 1-6, where the right side arm may extend towards a back of the right side of the body, and the left side arm may extend towards a back of the left side of the body.

[0087] Example 8: A head-mounted display system may include a body having a right side and a left side, a display device coupled to the body such that, when the head-mounted display system is donned by a user, the display device is positioned to display content to the user, a right side arm coupled to the right side of the body, the right side arm being dimensioned such that, when coupled to a first portion of a swappable strap, the right side arm and the first portion of the strap form a first fastener, and a left side arm coupled to the left side of the body, the left side arm being dimensioned such that, when coupled to a second portion of the strap, the left side arm and the second portion of the strap form a second fastener. The first fastener and the second fastener detachably secure the strap to the body of the head-mounted display system.

[0088] Example 9: The head-mounted display system of Example 8, where the first portion of the strap may include a first snap piece assembly having a first strap end snap piece affixed to a first end of the strap and dimensioned to snap around the right side arm, and the second portion of the strap may include a second snap piece assembly having a second strap end snap piece affixed to a second end of the strap and dimensioned to snap around the left side arm.

[0089] Example 10: The head-mounted display system of Examples 8 and 9, where the right side arm may include a right arm outer edge dimensioned to fit within an outer edge of the first snap piece assembly, and the left side arm may include a left arm outer edge dimensioned to fit within an outer edge of the second snap piece assembly.

[0090] Example 11: The head-mounted display system of any of Examples 8-10, where a lip of the outer edge of the first snap piece assembly may be dimensioned for detachably coupling to the right arm outer edge by fitting over the right arm outer edge, and a lip of the outer edge of the second snap piece assembly may be dimensioned for detachably coupling to the left arm outer edge by fitting over the left arm outer edge.

[0091] Example 12: The head-mounted display system of any of Examples 8-11, further including an electronic component housed within at least one of the right side arm or the left side arm.

[0092] Example 13: The head-mounted display system of any of Examples 8-12, where the electronic component comprises an audio transducer.

[0093] Example 14: The head-mounted display system of any of Examples 8-13, where the audio transducer may include a speaker, and at least one of the right side arm or the left side arm may be dimensioned to direct sound waves generated by the speaker toward an ear of the user.

[0094] Example 15: The head-mounted display system of any of Examples 8-14, where the right side arm may extend towards a back of the right side of the body, and the left side arm may extend towards a back of the left side of the body.

[0095] Example 16: The head-mounted display system of any of Examples 8-15, where the swappable strap may be one of a plurality of swappable straps, and each of the plurality of swappable straps may include a first portion and a second portion for coupling to the right side arm and the left side arm, respectively, to form fasteners for individually detachably securing each of the plurality of swappable straps.

[0096] Example 17: A strap may include a first portion including a first assembly dimensioned such that, when coupled to a right side arm of a body of a head-mounted display system included in a plurality of head-mounted display systems, forms a first fastener by fitting a lip of an outer edge of the first assembly over an outer edge of the right side arm, and a second portion including a second assembly dimensioned such that, when coupled to a left side arm of the body of the head-mounted display system, forms a second fastener by fitting a lip of an outer edge of the second assembly over an outer edge of the left side arm, the strap configured for connection to each of the plurality of head-mounted display systems by forming respective first fasteners and second fasteners that detachably secure the strap to the body of a respective head-mounted display system.

[0097] Example 18: The strap of Example 17, where the first assembly may include a first strap end snap piece affixed to a first end of the strap and dimensioned to fit around the respective right arm of each of the plurality of head-mounted display systems, and the second assembly may include a second strap end snap piece affixed to a second end of the strap and dimensioned to fit around the respective left arm of each of the plurality of head-mounted display systems.

[0098] Example 19: The strap of Examples 17 and 18, where the first strap end snap piece may be affixed to the first end of the strap using a thermal adhesive, and the second strap end snap piece may be affixed to the second end of the strap using the thermal adhesive.

[0099] Example 20: The strap of any of Examples 17-19, where the first snap piece assembly and the second snap piece assembly may include a hard goods assembly.

[0100] Embodiments of the present disclosure may include or be implemented in conjunction with various types of artificial-reality systems. Artificial reality is a form of reality that has been adjusted in some manner before presentation to a user, which may include, for example, a virtual reality, an augmented reality, a mixed reality, a hybrid reality, or some combination and/or derivative thereof. Artificial-reality content may include completely computer-generated content or computer-generated content combined with captured (e.g., real-world) content. The artificial-reality content may include video, audio, haptic feedback, or some combination thereof, any of which may be presented in a single channel or in multiple channels (such as stereo video that produces a three-dimensional (3D) effect to the viewer). Additionally, in some embodiments, artificial reality may also be associated with applications, products, accessories, services, or some combination thereof, that are used to, for example, create content in an artificial reality and/or are otherwise used in (e.g., to perform activities in) an artificial reality.

[0101] Artificial-reality systems may be implemented in a variety of different form factors and configurations. Some artificial-reality systems may be designed to work without near-eye displays (NEDs). Other artificial-reality systems may include an NED that also provides visibility into the real world (such as, e.g., augmented-reality system **1400** in FIG. **14**) or that visually immerses a user in an artificial reality (such as, e.g., virtual-reality system **1500** in FIG. **15**). While some artificial-reality devices may be self-contained systems, other artificial-reality devices may communicate and/or coordinate with external devices to provide an artificial-reality experience to a user. Examples of such external devices include handheld controllers, mobile devices, desktop computers, devices worn by a user, devices worn by one or more other users, and/or any other suitable external system.

[0102] Turning to FIG. **14**, augmented-reality system **1400** may include an eyewear device **1402** with a frame **1410** configured to hold a left display device **1415**(A) and a right display device **1415**(B) in front of a user's eyes. Display devices **1415**(A) and **1415**(B) may act together or independently to present an image or series of images to a user. While augmented-reality system **1400** includes two displays, embodiments of this disclosure may be implemented in augmented-reality systems with a single NED or more than two NEDs.

[0103] In some embodiments, augmented-reality system **1400** may include one or more sensors, such as sensor **1440**. Sensor **1440** may generate measurement signals in response to motion of augmented-reality system **1400** and may be located on substantially any portion of frame **1410**. Sensor **1440** may represent one or more of a variety of different sensing mechanisms, such as a position sensor, an inertial measurement unit (IMU), a depth camera assembly, a structured light emitter and/or detector, or any combination thereof. In some embodiments, augmented-reality system **1400** may or may not include sensor **1440** or may include more than one sensor. In embodiments in which sensor **1440** includes an IMU, the IMU may generate calibration data based on measurement signals from sensor **1440**. Examples of sensor **1440** may include, without limitation, accelerometers, gyroscopes, magnetometers, other suitable types of sensors that detect motion, sensors used for error correction of the IMU, or some combination thereof.

[0104] In some examples, augmented-reality system **1400** may also include a microphone array with a plurality of acoustic transducers **1420**(A)-**1420**(J), referred to collectively as acoustic transducers **1420**. Acoustic transducers **1420** may represent transducers that detect air pressure variations induced by sound waves. Each acoustic transducer **1420** may be configured to detect sound and convert the detected sound into an electronic format (e.g., an analog or digital format). The microphone array in FIG. **15** may include, for example, ten acoustic transducers: **1420**(A) and **1420**(B), which may be designed to be placed inside a corresponding ear of the user, acoustic transducers **1420**(C), **1420**(D), **1420**(E), **1420**(F), **1420**(G), and **1420**(H), which may be positioned at various locations on frame **1410**, and/or acoustic transducers **1420**(I) and **1420**(J), which may be positioned on a corresponding neckband **1405**.

[0105] In some embodiments, one or more of acoustic transducers **1420**(A)-(F) may be used as output transducers (e.g., speakers). For example, acoustic transducers **1420**(A) and/or **1420**(B) may be earbuds or any other suitable type of headphone or speaker.

[0106] The configuration of acoustic transducers **1420** of the microphone array may vary. While augmented-reality system **1400** is shown in FIG. **14** as having ten acoustic transducers **1420**, the number of acoustic transducers **1420** may be greater or less than ten. In some embodiments, using higher numbers of acoustic transducers **1420** may increase the amount of audio information collected and/or the sensitivity and accuracy of the audio information. In contrast, using a lower number of acoustic transducers **1420** may decrease the computing power required by an associated controller **1450** to process the collected audio information. In addition, the position of each acoustic transducer **1420** of the microphone array may vary. For example, the position of an acoustic transducer **1420** may include a defined position on the user, a defined coordinate on frame **1410**, an orientation associated with each acoustic transducer **1420**, or some combination thereof.

[0107] Acoustic transducers **1420**(A) and **1420**(B) may be positioned on different parts of the user's ear, such as behind the pinna, behind the tragus, and/or within the auricle or fossa. Or, there may be additional acoustic transducers **1420** on or surrounding the ear in addition to acoustic transducers **1420** inside the ear canal. Having an acoustic transducer **1420** positioned next to an ear canal of a user may enable the microphone array to collect information on how sounds arrive at the ear canal. By positioning at least two of acoustic transducers **1420** on either side of a user's head (e.g., as binaural microphones), augmented-reality device **1400** may simulate binaural hearing and capture a 3D stereo sound field around about a user's head. In some embodiments, acoustic transducers **1420**(A) and **1420**(B) may be connected to augmented-reality system **1400** via a wired connection **1430**, and in other embodiments acoustic transducers **1420**(A) and **1420**(B) may be connected to augmented-reality system **1400** via a wireless connection (e.g., a Bluetooth connection). In still other embodiments, acoustic transducers **1420**(A) and **1420**(B) may not be used at all in conjunction with augmented-reality system **1400**.

[0108] Acoustic transducers **1420** on frame **1410** may be positioned in a variety of different ways, including along the length of the temples, across the bridge, above or below display devices **1415**(A) and **1415**(B), or some combination thereof. Acoustic transducers **1420** may also be oriented such that the microphone array is able to detect sounds in a wide range of directions surrounding the user wearing the augmented-reality system **1400**. In some embodiments, an optimization process may be performed during manufacturing of augmented-reality system **1400** to determine relative positioning of each acoustic transducer **1420** in the microphone array.

[0109] In some examples, augmented-reality system **1400** may include or be connected to an external device (e.g., a paired device), such as neckband **1405**. Neckband **1405** generally represents any type or form of paired device. Thus, the following discussion of neckband **1405** may also apply to various other paired devices, such as charging cases, smart watches, smart phones, wrist bands, other wearable devices, hand-held controllers, tablet computers, laptop computers, other external compute devices, etc.

[0110] As shown, neckband **1405** may be coupled to eyewear device **1402** via one or more connectors. The connectors may be wired or wireless and may include electrical and/or non-electrical (e.g., structural) components. In some cases, eyewear device **1402** and neckband **1405** may operate independently without any wired or wireless connection between them. While FIG. **14** illustrates the components of eyewear device **1402** and neckband **1405** in example locations on eyewear device **1402** and neckband **1405**, the components may be located elsewhere and/or distributed differently on eyewear device **1402** and/or neckband **1405**. In some embodiments, the components of eyewear device **1402** and neckband **1405** may be located on one or more additional peripheral devices paired with eyewear device **1402**, neckband **1405**, or some combination thereof.

[0111] Pairing external devices, such as neckband **1405**, with augmented-reality eyewear devices may enable the eyewear devices to achieve the form factor of a pair of glasses while still providing sufficient battery and computation power for expanded capabilities. Some or all of the battery power, computational resources, and/or additional features of augmented-reality system **1400** may be provided by a paired device or shared between a paired device and an eyewear device, thus reducing the weight, heat profile, and form factor of the eyewear device overall while still retaining desired functionality. For example, neckband **1405** may allow components that would otherwise be included on an eyewear device to be included in neckband **1405** since users may tolerate a heavier weight load on their shoulders than they would tolerate on their heads. Neckband **1405** may also have a larger surface area over which to diffuse and disperse heat to the ambient environment. Thus, neckband **1405** may allow for greater battery and computation capacity than might otherwise have been possible on a stand-alone eyewear device. Since weight carried in neckband **1405** may be less invasive to a user than weight carried in eyewear device **1402**, a user may tolerate wearing a lighter eyewear device and carrying or wearing the paired device for greater lengths of time than a user would tolerate wearing a heavy stand-alone eyewear device, thereby enabling users to more fully incorporate artificial-reality environments into their day-to-day activities.

[0112] Neckband **1405** may be communicatively coupled with eyewear device **1402** and/or to other devices. These other devices may provide certain functions (e.g., tracking, localizing, depth mapping, processing, storage, etc.) to augmented-reality system **1400**. In the embodiment of FIG. **14**, neckband **1405** may include two acoustic transducers (e.g.,

1420( ) and **1420**(J)) that are part of the microphone array (or potentially form their own microphone subarray). Neckband **1405** may also include a controller **1425** and a power source **1435**.

[0113] Acoustic transducers **1420**( ) and **1420**(J) of neckband **1405** may be configured to detect sound and convert the detected sound into an electronic format (analog or digital). In the embodiment of FIG. **14**, acoustic transducers **1420**( ) and **1420**(J) may be positioned on neckband **1405**, thereby increasing the distance between the neckband acoustic transducers **1420**( ) and **1420**(J) and other acoustic transducers **1420** positioned on eyewear device **1402**. In some cases, increasing the distance between acoustic transducers **1420** of the microphone array may improve the accuracy of beamforming performed via the microphone array. For example, if a sound is detected by acoustic transducers **1420**(C) and **1420**(D) and the distance between acoustic transducers **1420**(C) and **1420**(D) is greater than, e.g., the distance between acoustic transducers **1420**(D) and **1420**(E), the determined source location of the detected sound may be more accurate than if the sound had been detected by acoustic transducers **1420**(D) and **1420**(E).

[0114] Controller **1425** of neckband **1405** may process information generated by the sensors on neckband **1405** and/or augmented-reality system **1400**. For example, controller **1425** may process information from the microphone array that describes sounds detected by the microphone array. For each detected sound, controller **1425** may perform a direction-of-arrival (DOA) estimation to estimate a direction from which the detected sound arrived at the microphone array. As the microphone array detects sounds, controller **1425** may populate an audio data set with the information. In embodiments in which augmented-reality system **1400** includes an inertial measurement unit, controller **1425** may compute all inertial and spatial calculations from the IMU located on eyewear device **1402**. A connector may convey information between augmented-reality system **1400** and neckband **1405** and between augmented-reality system **1400** and controller **1425**. The information may be in the form of optical data, electrical data, wireless data, or any other transmittable data form. Moving the processing of information generated by augmented-reality system **1400** to neckband **1405** may reduce weight and heat in eyewear device **1402**, making it more comfortable to the user.

[0115] Power source **1435** in neckband **1405** may provide power to eyewear device **1402** and/or to neckband **1405**. Power source **1435** may include, without limitation, lithium ion batteries, lithium-polymer batteries, primary lithium batteries, alkaline batteries, or any other form of power storage. In some cases, power source **1435** may be a wired power source. Including power source **1435** on neckband **1405** instead of on eyewear device **1402** may help better distribute the weight and heat generated by power source **1435**.

[0116] As noted, some artificial-reality systems may, instead of blending an artificial reality with actual reality, substantially replace one or more of a user's sensory perceptions of the real world with a virtual experience. One example of this type of system is a head-worn display system, such as virtual-reality system **1500** in FIG. **15**, that mostly or completely covers a user's field of view. Virtual-reality system **1500** may include a front rigid body **1502** and a band **1504** shaped to fit around a user's head. Virtual-reality system **1500** may also include output audio transducers **1506**(A) and **1506**(B). Furthermore, while not shown in FIG. **15**, front rigid body **1502** may include one or more electronic elements, including one or more electronic displays, one or more inertial measurement units (IMUs), one or more tracking emitters or detectors, and/or any other suitable device or system for creating an artificial-reality experience.

[0117] Artificial-reality systems may include a variety of types of visual feedback mechanisms. For example, display devices in augmented-reality system **1400** and/or virtual-reality system **1500** may include one or more liquid crystal displays (LCDs), light emitting diode (LED) displays, organic LED (OLED) displays, digital light project (DLP) micro-displays, liquid crystal on silicon (LCoS) micro-displays, and/or any other suitable type of display screen. These artificial-reality systems may include a single display screen for both eyes or may provide a display screen for each eye, which may allow for additional flexibility for varifocal adjustments or for correcting a user's refractive error. Some of these artificial-reality systems may also include optical subsystems having one or more lenses (e.g., conventional concave or convex lenses, Fresnel lenses, adjustable liquid lenses, etc.) through which a user may view a display screen. These optical subsystems may serve a variety of purposes, including to collimate (e.g., make an object appear at a greater distance than its physical distance), to magnify (e.g., make an object appear larger than its actual size), and/or to relay (to, e.g., the viewer's eyes) light. These optical subsystems may be used in a non-pupil-forming architecture (such as a single lens configuration that directly collimates light but results in so-called pincushion distortion) and/or a pupil-forming architecture (such as a multi-lens configuration that produces so-called barrel distortion to nullify pincushion distortion).

[0118] In addition to or instead of using display screens, some the artificial-reality systems described herein may include one or more projection systems. For example, display devices in augmented-reality system **1400** and/or virtual-reality system **1500** may include micro-LED projectors that project light (using, e.g., a waveguide) into display devices, such as clear combiner lenses that allow ambient light to pass through. The display devices may refract the projected light toward a user's pupil and may enable a user to simultaneously view both artificial-reality content and the real world. The display devices may accomplish this using any of a variety of different optical components, including waveguide components (e.g., holographic, planar, diffractive, polarized, and/or reflective waveguide elements), light-manipulation surfaces and elements (such as diffractive, reflective, and refractive elements and gratings), coupling elements, etc. Artificial-reality systems may also be configured with any other suitable type or form of image projection system, such as retinal projectors used in virtual retina displays.

[0119] The artificial-reality systems described herein may also include various types of computer vision components and subsystems. For example, augmented-reality system **1400** and/or virtual-reality system **1500** may include one or more optical sensors, such as two-dimensional (2D) or 3D cameras, structured light transmitters and detectors, time-of-flight depth sensors, single-beam or sweeping laser rangefinders, 3D LiDAR sensors, and/or any other suitable type or form of optical sensor. An artificial-reality system may process data from one or more of these sensors to

identify a location of a user, to map the real world, to provide a user with context about real-world surroundings, and/or to perform a variety of other functions.

[0120] The artificial-reality systems described herein may also include one or more input and/or output audio transducers. Output audio transducers may include voice coil speakers, ribbon speakers, electrostatic speakers, piezoelectric speakers, bone conduction transducers, cartilage conduction transducers, tragus-vibration transducers, and/or any other suitable type or form of audio transducer. Similarly, input audio transducers may include condenser microphones, dynamic microphones, ribbon microphones, and/or any other type or form of input transducer. In some embodiments, a single transducer may be used for both audio input and audio output.

[0121] In some embodiments, the artificial-reality systems described herein may also include tactile (i.e., haptic) feedback systems, which may be incorporated into headwear, gloves, body suits, handheld controllers, environmental devices (e.g., chairs, floormats, etc.), and/or any other type of device or system. Haptic feedback systems may provide various types of cutaneous feedback, including vibration, force, traction, texture, and/or temperature. Haptic feedback systems may also provide various types of kinesthetic feedback, such as motion and compliance. Haptic feedback may be implemented using motors, piezoelectric actuators, fluidic systems, and/or a variety of other types of feedback mechanisms. Haptic feedback systems may be implemented independent of other artificial-reality devices, within other artificial-reality devices, and/or in conjunction with other artificial-reality devices.

[0122] By providing haptic sensations, audible content, and/or visual content, artificial-reality systems may create an entire virtual experience or enhance a user's real-world experience in a variety of contexts and environments. For instance, artificial-reality systems may assist or extend a user's perception, memory, or cognition within a particular environment. Some systems may enhance a user's interactions with other people in the real world or may enable more immersive interactions with other people in a virtual world. Artificial-reality systems may also be used for educational purposes (e.g., for teaching or training in schools, hospitals, government organizations, military organizations, business enterprises, etc.), entertainment purposes (e.g., for playing video games, listening to music, watching video content, etc.), and/or for accessibility purposes (e.g., as hearing aids, visual aids, etc.). The embodiments disclosed herein may enable or enhance a user's artificial-reality experience in one or more of these contexts and environments and/or in other contexts and environments.

What is claimed is:

1. A head-mounted display system comprising:

a body having a right side and a left side;

a display device coupled to the body such that, when the head-mounted display system is donned by a user, the display device is positioned to display content to the user;

a right side arm coupled to the right side of the body, the right side arm being dimensioned such that, when coupled to a first portion of a swappable strap, the right side arm and the first portion of the strap form a first fastener; and

a left side arm coupled to the left side of the body, the left side arm being dimensioned such that, when coupled to a second portion of the strap, the left side arm and the second portion of the strap form a second fastener, the first fastener and the second fastener detachably securing the strap to the body of the head-mounted display system.

2. The system of claim **1**, wherein:

the first portion of the strap comprises a first snap piece assembly having a first strap end snap piece affixed to a first end of the strap and dimensioned to snap around the right side arm; and

the second portion of the strap comprises a second snap piece assembly having a second strap end snap piece affixed to a second end of the strap and dimensioned to snap around the left side arm.

3. The system of claim **2**, wherein:

the right side arm comprises a right arm outer edge dimensioned to fit within an outer edge of the first snap piece assembly; and

the left side arm comprises a left arm outer edge dimensioned to fit within an outer edge of the second snap piece assembly.

4. The system of claim **3**, wherein:

a lip of the outer edge of the first snap piece assembly is dimensioned for detachably coupling to the right arm outer edge by fitting over the right arm outer edge; and

a lip of the outer edge of the second snap piece assembly is dimensioned for detachably coupling to the left arm outer edge by fitting over the left arm outer edge.

5. The system of claim **1**, further comprising an electronic component housed within at least one of the right side arm or the left side arm.

6. The system of claim **5**, wherein the electronic component comprises an audio transducer.

7. The system of claim **6**, wherein:

the audio transducer comprises a speaker; and

at least one of the right side arm or the left side arm is dimensioned to direct sound waves generated by the speaker toward an ear of the user.

8. The system of claim **1**, wherein:

the right side arm extends towards a back of the right side of the body; and

the left side arm extends towards a back of the left side of the body.

9. The system of claim **1**, wherein:

the swappable strap is one of a plurality of swappable straps; and

each of the plurality of swappable straps comprise a first portion and a second portion for coupling to the right side arm and the left side arm, respectively, to form fasteners for individually detachably securing each of the plurality of swappable straps.

10. A method comprising:

attaching a right side arm to a right side of a body of a head-mounted display system;

attaching a left side arm to a left side of the body of the head-mounted display system;

dimensioning the right side arm for detachable coupling to multiple straps; and

dimensioning the left side arm for detachable coupling to the multiple straps, each of the multiple straps comprising:

a first portion dimensioned to form a fastener when detachably coupled to the right side arm; and

a second portion dimensioned to form a fastener when detachably coupled to the left side arm.

11. The method of claim **10**, wherein:

the first portion of each of the multiple straps comprises a first snap piece assembly having a first strap end snap piece affixed to a first end of the strap and dimensioned to snap around the right side arm; and

a second portion of each of the multiple straps comprises a second snap piece assembly having a second strap end snap piece affixed to a second end of the strap and dimensioned to snap around the left side arm.

12. The method of claim **11**, wherein:

the right side arm comprises a right arm outer edge dimensioned to fit within an outer edge of the first snap piece assembly; and

the left side arm comprises a left arm outer edge dimensioned to fit within an outer edge of the second snap piece assembly.

13. The method of claim **12**, wherein:

a lip of the outer edge of the first snap piece assembly is dimensioned for detachably coupling to the right arm outer edge by fitting over the right arm outer edge; and

a lip of the outer edge of the second snap piece assembly is dimensioned for detachably coupling to the left arm outer edge by fitting over the left arm outer edge.

14. The method of claim **10**, further comprising housing an electronic component within at least one of the right side arm or the left side arm.

15. The method of claim **14**, wherein the electronic component comprises an audio transducer.

16. The method of claim **10**, wherein:

the right side arm extends towards a back of the right side of the body; and

the left side arm extends towards a back of the left side of the body.

17. A strap comprising:

a first portion comprising a first assembly dimensioned such that, when coupled to a right side arm of a body of a head-mounted display system included in a plurality of head-mounted display systems, forms a first fastener by fitting a lip of an outer edge of the first assembly over an outer edge of the right side arm; and

a second portion comprising a second assembly dimensioned such that, when coupled to a left side arm of the body of the head-mounted display system, forms a second fastener by fitting a lip of an outer edge of the second assembly over an outer edge of the left side arm, the strap configured for connection to each of the plurality of head-mounted display systems by forming respective first fasteners and second fasteners that detachably secure the strap to the body of a respective head-mounted display system.

18. The strap of claim **17**, wherein:

the first assembly comprises a first strap end snap piece affixed to a first end of the strap and dimensioned to fit around the respective right arm of each of the plurality of head-mounted display systems; and

the second assembly comprises a second strap end snap piece affixed to a second end of the strap and dimensioned to fit around the respective left arm of each of the plurality of head-mounted display systems.

19. The strap of claim **18**, wherein:

the first strap end snap piece is affixed to the first end of the strap using a thermal adhesive; and

the second strap end snap piece is affixed to the second end of the strap using the thermal adhesive.

20. The strap of claim **17**, wherein the first assembly and the second assembly comprise a hard goods assembly.

* * * * *