US 20210370744A1

(19) United States

(12) Patent Application Publication

(10) Pub. No.: US 2021/0370744 A1

(43) Pub. Date: Dec. 2, 2021

Gray et al.

(54) AIR VENTING SYSTEM AND VENTING METHOD FOR A TRUCK

(71) Applicant: **Ford Global Technologies, LLC**, Dearborn, MI (US)

(72) Inventors: **Jeffrey Gray**, Dearborn, MI (US); **Vince Anthony Chimento**, Plymouth, MI (US); **Eric R. Yerke**, Redford, MI (US); **Peter Joyce**, Royal Oak, MI (US); **Srinath Vijayakumar**, Farmington, MI (US); **Daniel Hewitt**, Amherstburg (CA); **Mukdam Kena**, Commerce Twp., MI (US)

(21) Appl. No.: **16/889,186**

(22) Filed: **Jun. 1, 2020**

Publication Classification

(51) **Int. Cl.**
B60H 1/00 (2006.01)

(52) **U.S. Cl.**
CPC ***B60H 1/00564*** (2013.01); ***B60H 1/00378*** (2013.01)

(57) **ABSTRACT**

An air venting system includes, among other things. A box of a truck. The box provides a cargo area. The system further includes a cab back panel of the truck. The cab back panel has an exposed section that provides a front wall of the cargo area. The cab back panel has a hidden section outside the cargo area. An air extractor is held within the hidden section of the cab back panel.

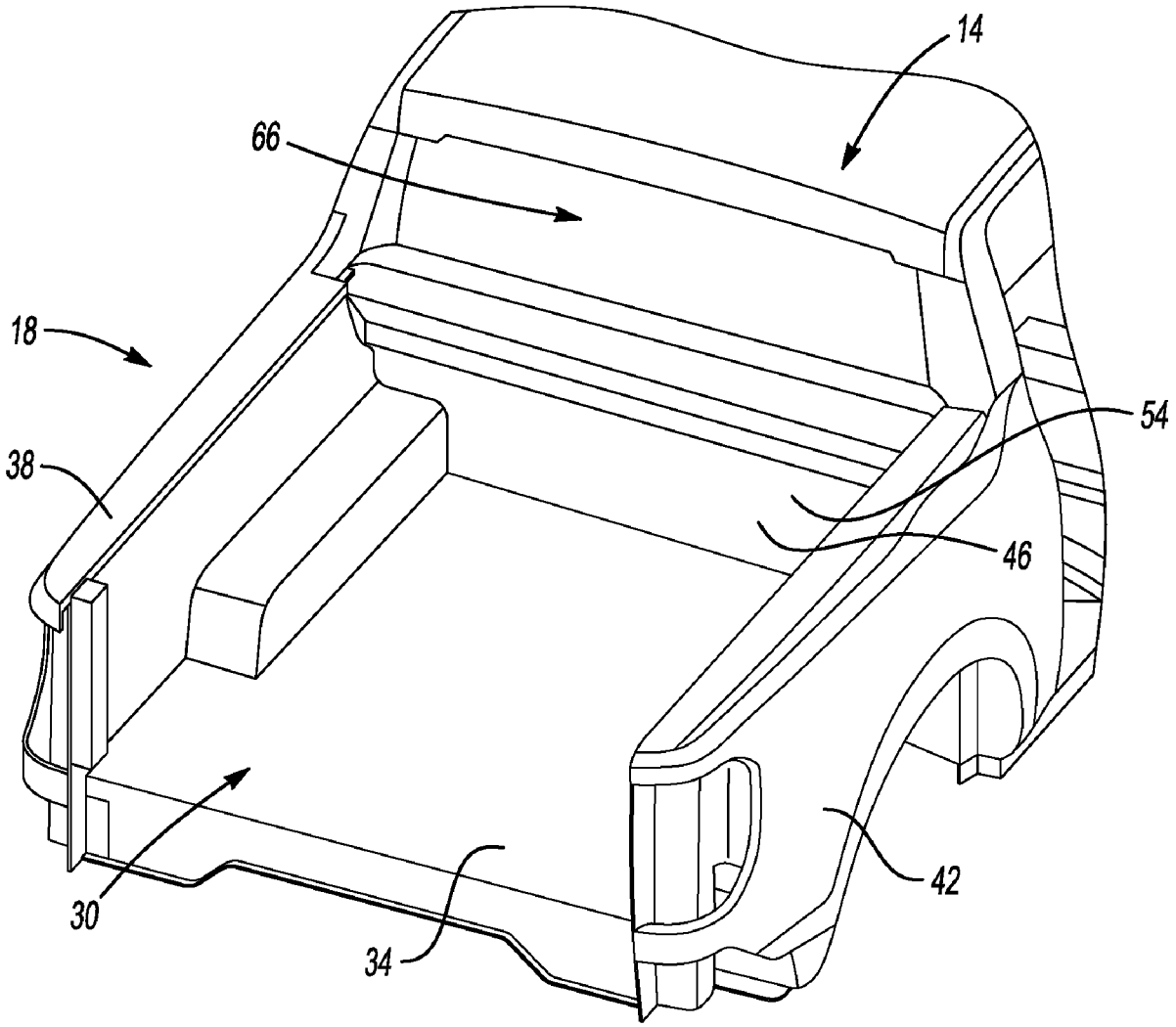

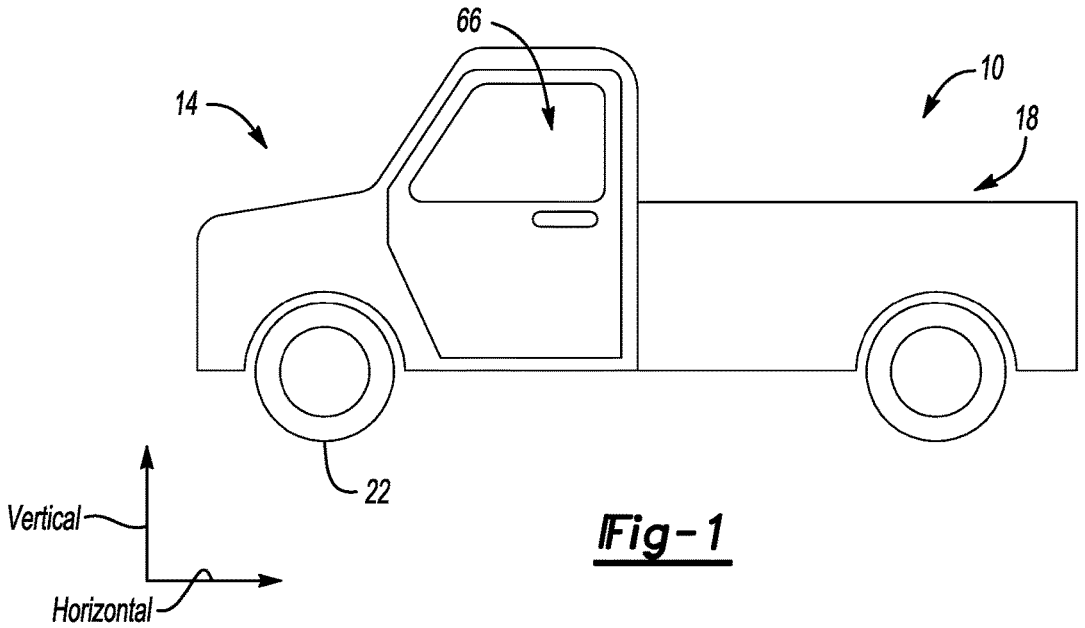

Fig-1

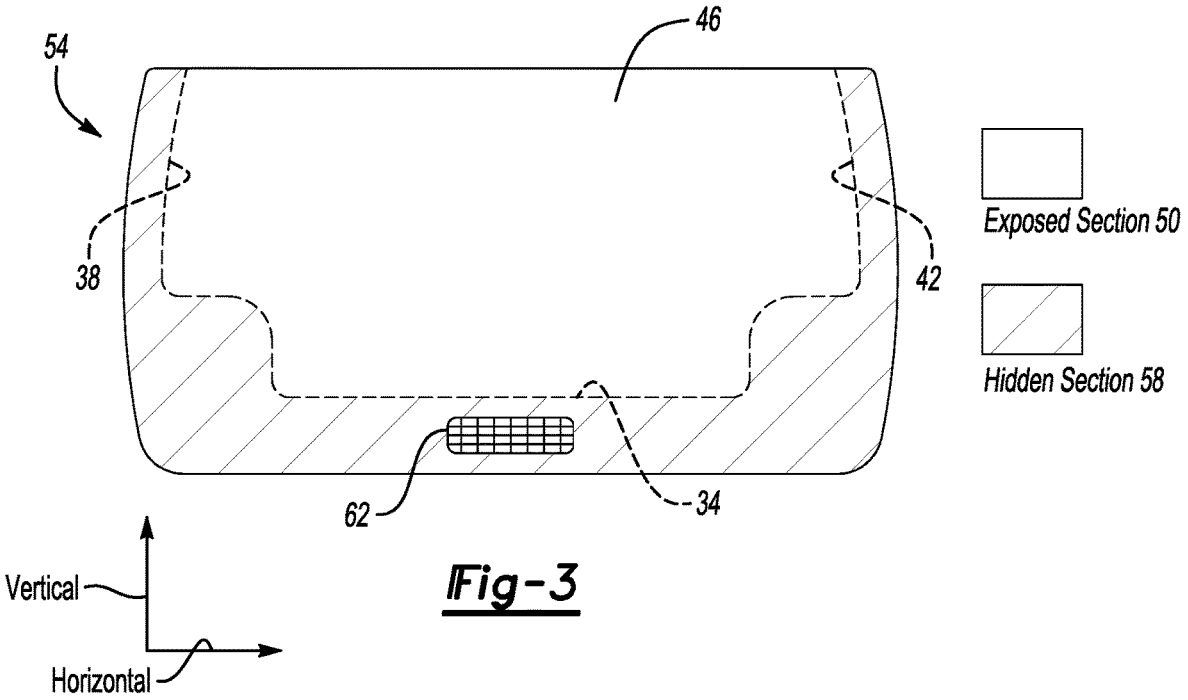

Fig-3

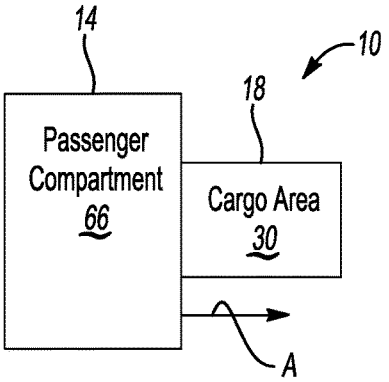

Fig-4

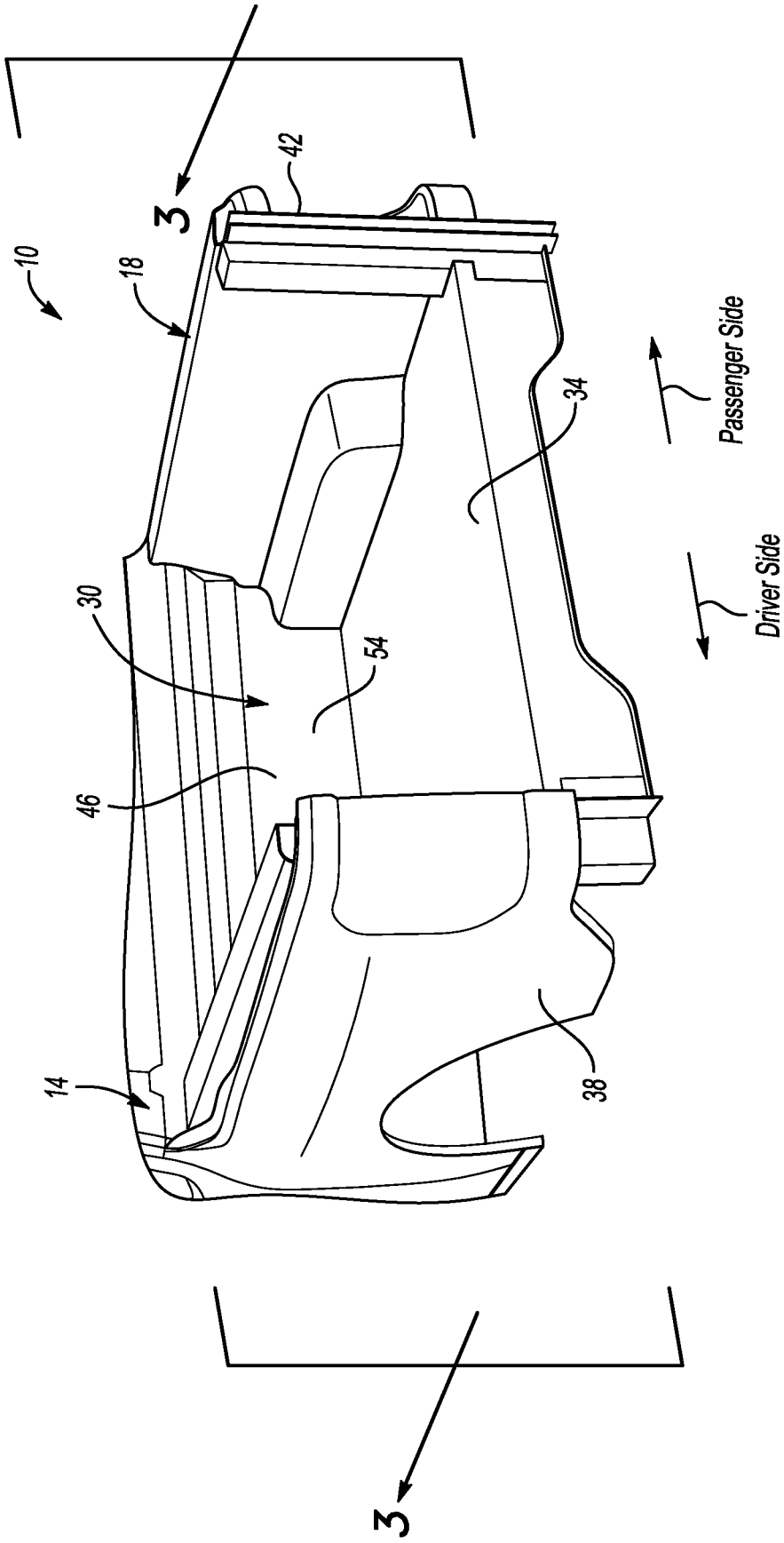

Fig-2

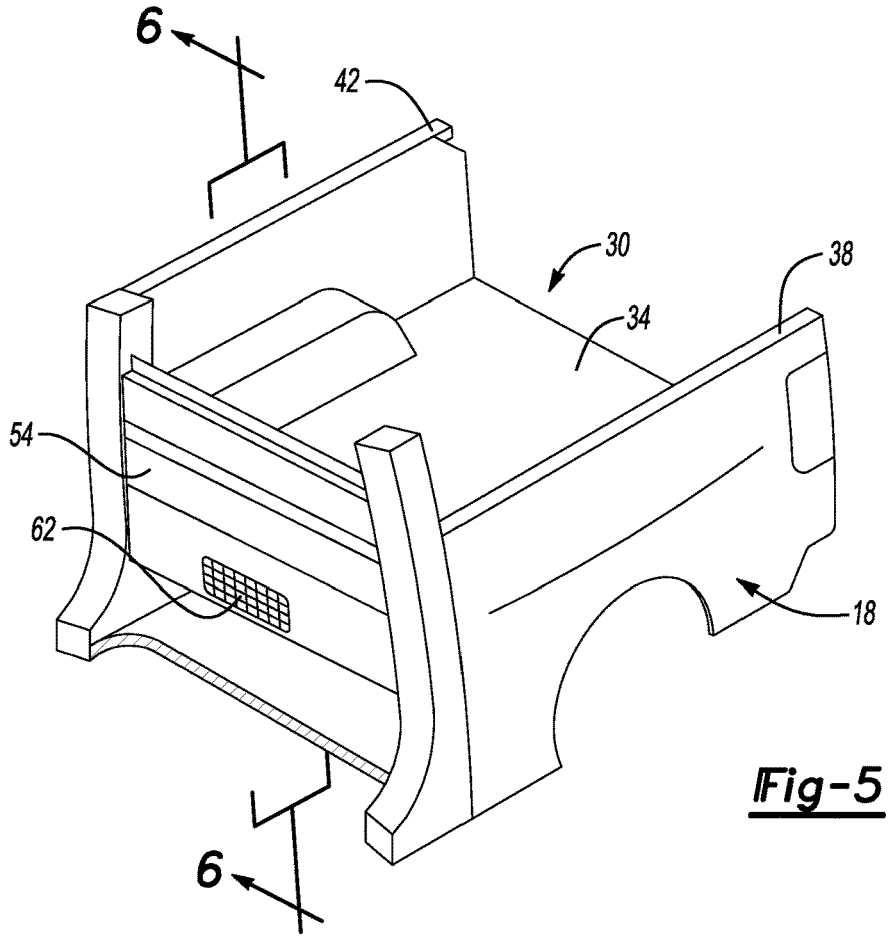

Fig-5

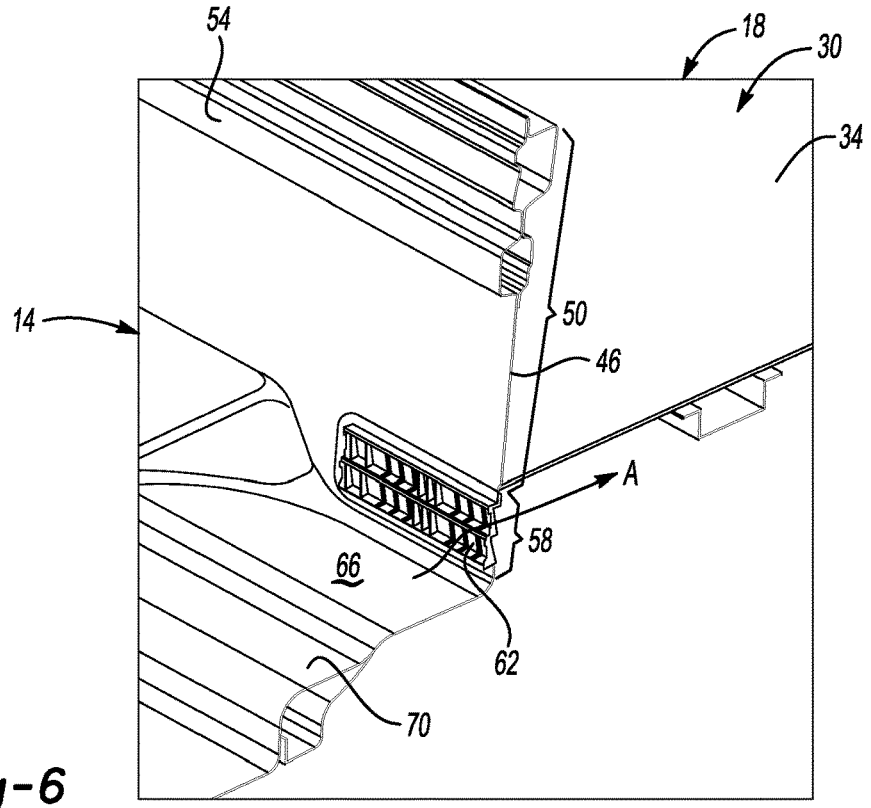

Fig-6

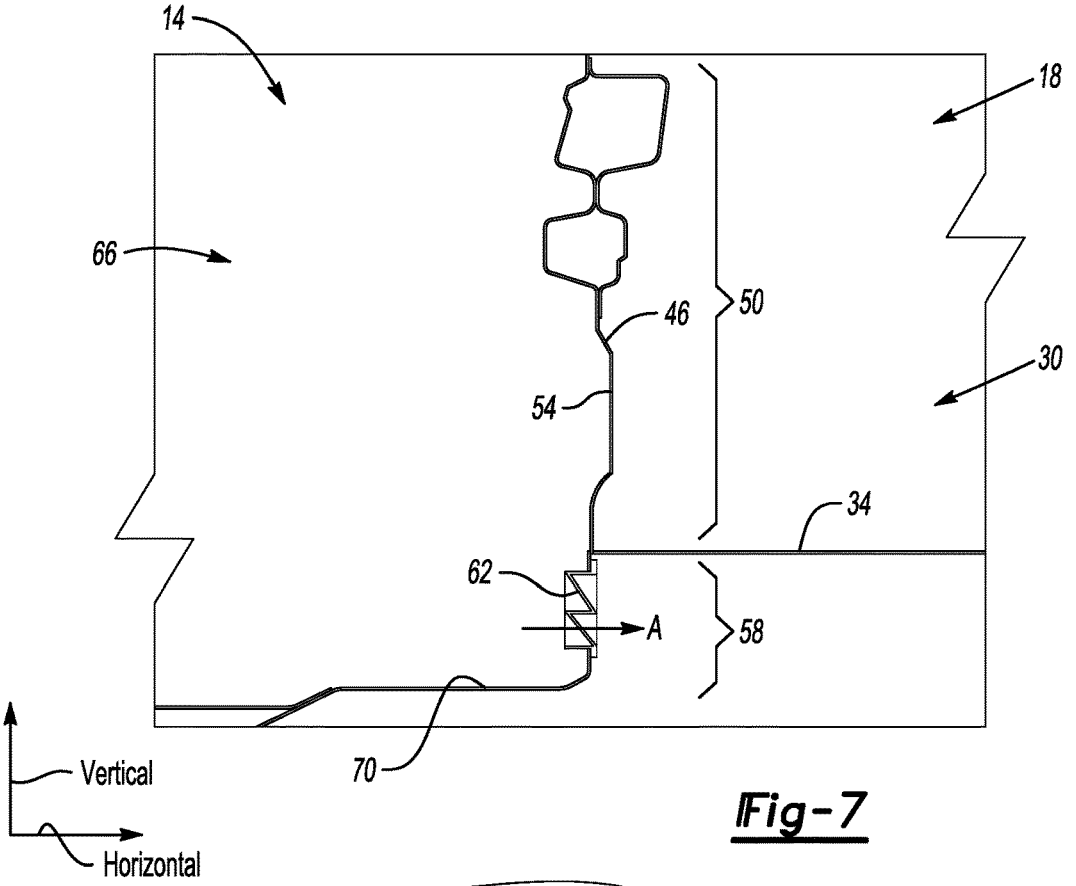
14
18
66
46
50
30
54
34
62
A
58
70
Vertical
Horizontal

Fig-7

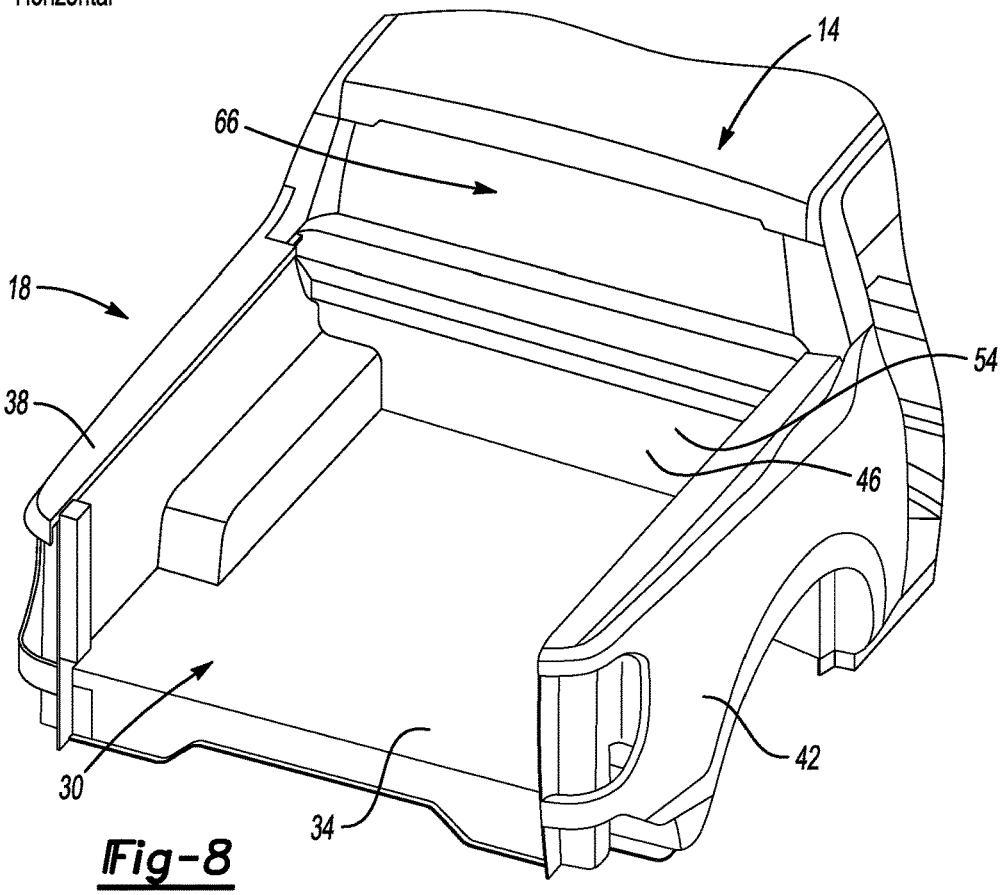
14
66
18
54
38
46
42
30
34

Fig-8

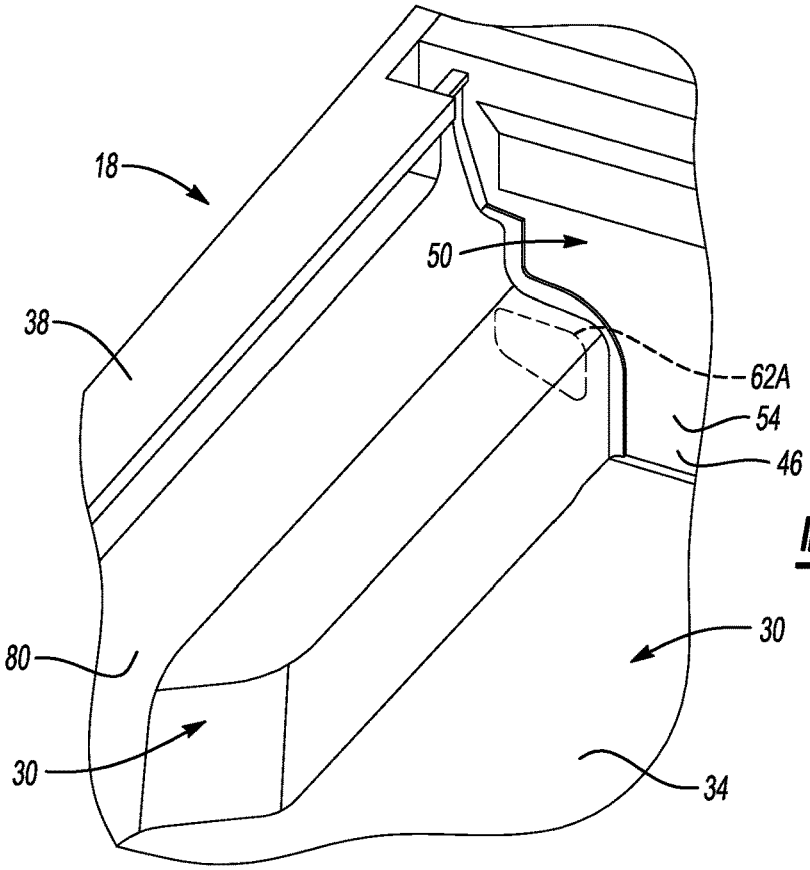

Fig-9

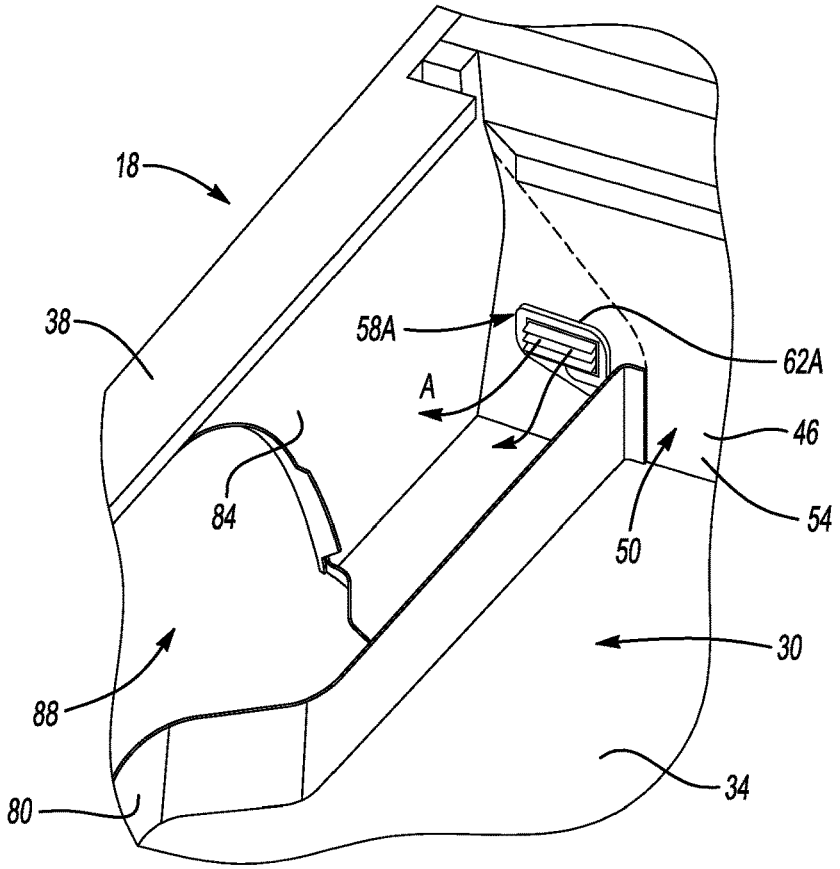

Fig-10

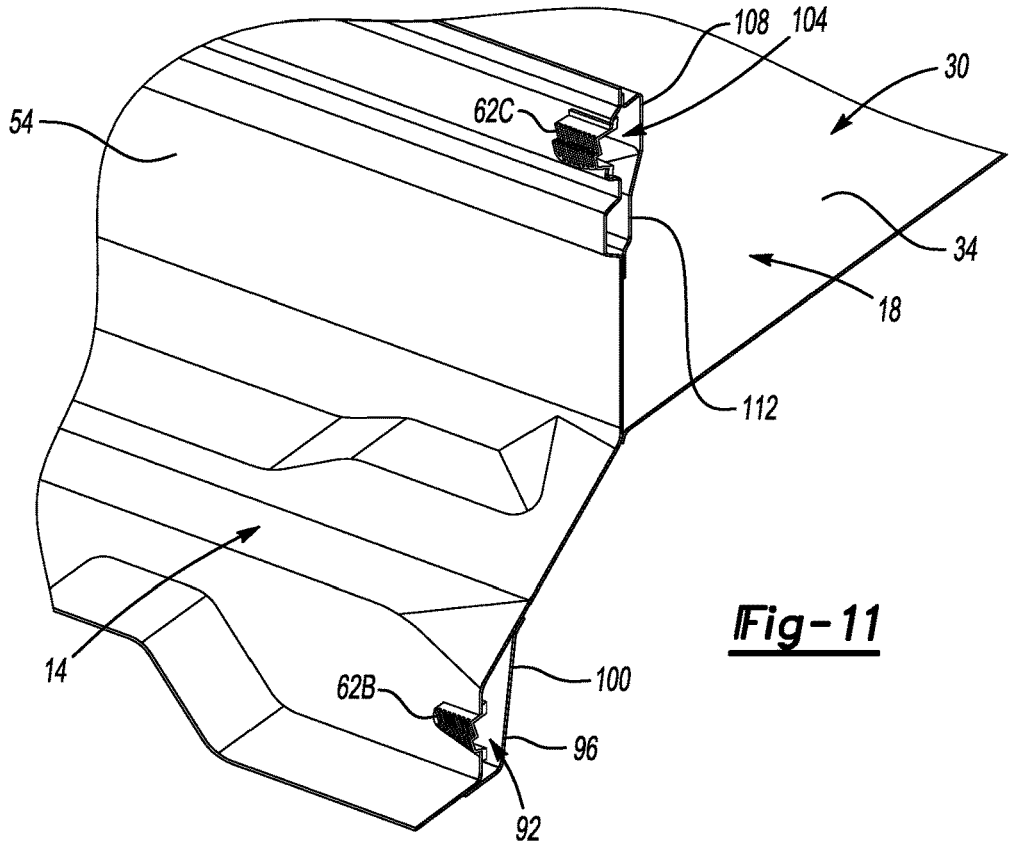
108
104
30
54
62C
34
18
112
14
100
62B
96
92

Fig-11

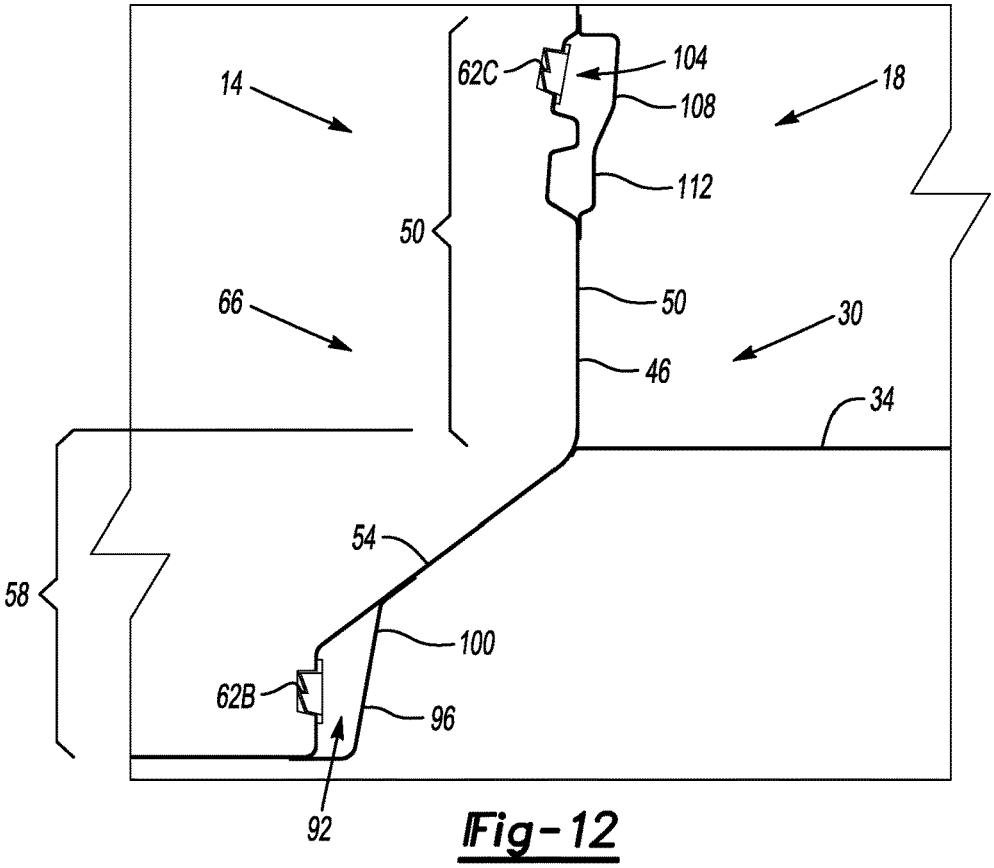
14
62C
104
108
18
112
50
66
50
30
46
34
54
58
100
62B
96
92

Fig-12

AIR VENTING SYSTEM AND VENTING METHOD FOR A TRUCK

TECHNICAL FIELD

[0001] This disclosure relates generally to venting air from a passenger compartment of a truck and, more particularly, a truck having a unibody construction.

BACKGROUND

[0002] Conventional trucks have a body-on-frame construction where a cab and a box are attached to a vehicle frame. The cab is spaced a distance from the box, which results in a gap between the cab and the box. As required, an air extractor can vent air from a passenger compartment of the cab into the gap.

[0003] Trucks having a unibody construction may not include a gap an open area between the cab and the box, nor a vehicle frame separate from the cab and the box. Accordingly, some trucks having a unibody construction include an air extractor that vents air into a cargo area of the box. The air extractor can be covered by a bed liner.

SUMMARY

[0004] An air venting system according to an exemplary aspect of the present disclosure includes, among other things, a box of a truck. The box provides a cargo area. The system further includes a cab back panel of the truck. The cab back panel has an exposed section that provides a front wall of the cargo area. The cab back panel has a hidden section outside the cargo area. An air extractor is held within the hidden section of the cab back panel.

[0005] In a further exemplary embodiment of the foregoing system, the air extractor opens to an area that is outside the cargo area such that the air extractor is configured to vent air from a passenger compartment of the truck to an area that is outside the cargo area.

[0006] In a further exemplary embodiment of any of the foregoing systems, the air extractor is held within the hidden section of the cab back panel at a position that is vertically beneath a floor of the box such that the air extractor is configured to vent air from a passenger compartment of the truck to an area vertically beneath the floor of the box.

[0007] In a further exemplary embodiment of any of the foregoing systems, the floor of the box is vertically elevated relative to a floor of the passenger compartment.

[0008] In a further exemplary embodiment of any of the foregoing systems, the air extractor is held within the hidden section of the cab back panel at a position that is outboard of the cargo area such that the air extractor is configured to vent air from a passenger compartment of the truck to an area outboard the cargo area.

[0009] A further exemplary embodiment of any of the foregoing systems includes a side wall of the box. The side wall has an inner panel and an outer panel. The air extractor opens to an area between the inner panel and the outer panel such that the air extractor is configured to vent air from the passenger compartment to the area between the inner panel and the outer panel.

[0010] In a further exemplary embodiment of any of the foregoing systems, the outer panel includes a rear wheel opening that communicates air from the area between the inner panel and the outer panel to an area outside the truck.

[0011] In a further exemplary embodiment of any of the foregoing systems, the air extractor is a side air extractor. The system then further includes a lower air extractor that is held within another portion of the hidden section of the cab back panel at a position that is vertically beneath a floor of the box such that the lower air extractor is configured to vent air from a passenger compartment of the truck to an area vertically beneath the floor of the box.

[0012] In a further exemplary embodiment of any of the foregoing systems, the side air extractor is a driver side air extractor that is configured to vent air from the passenger compartment to the area between the inner panel and the outer panel on a driver side of the cargo area. The system further includes a passenger side air extractor that is held within another portion of the hidden section and is configured to vent air from the passenger compartment to an area that is between an inner panel and an outer panel of a side wall on a passenger side of the cargo area.

[0013] In a further exemplary embodiment of any of the foregoing systems, the air extractor is configured to vent air from the passenger compartment into an interior of a cross-member that extends in a cross-vehicle direction. The cross-member has a box section.

[0014] In a further exemplary embodiment of any of the foregoing systems, the air extractor is a lower air extractor and the cross-member is a lower cross-member. The system further includes an upper air extractor held within the exposed section of the cab back panel and configured to vent air from the passenger compartment into an interior of an upper cross-member that extends in a cross-vehicle direction.

[0015] In a further exemplary embodiment of any of the foregoing systems, the hidden section of the cab back panel provides one side of the lower cross-member, and the exposed section of the cab back panel provides one side of the upper cross-member.

[0016] In a further exemplary embodiment of any of the foregoing systems, the exposed section of the cab back panel is exposed within the cargo area and is uncovered by any bed liner.

[0017] In a further exemplary embodiment of any of the foregoing systems, the truck has a unibody construction.

[0018] An air venting system according to another exemplary aspect of the present disclosure includes, among other things, a box of a unibody truck. The box provides a cargo area. The system further includes a cab back panel of the unibody truck, and a support panel extending longitudinally in a cross-vehicle direction. The support panel is joined to the cab back panel to provide a cross-member. The system still further includes an air extractor held within the cab back panel. The air extractor is configured to vent air from a passenger compartment of the unibody truck into an interior of the cross-member.

[0019] In another exemplary embodiment of the foregoing system, the support panel is an upper support member, the air extractor is an upper air extractor, and the cross-member is an upper cross-member. The interior of the upper cross-member is vertically above a floor of the box such that the upper air extractor vents air from the passenger compartment of the unibody truck into the interior of the upper cross-member at a position vertically above the floor of the box. The system then further includes a lower support panel extending longitudinally in a cross-vehicle direction and a lower air extractor. The lower support panel is joined to the

cab back panel to provide a lower cross-member vertically beneath the floor of the box. The lower air extractor is configured to vent air from the passenger compartment of the unibody truck to an interior of the lower cross-member at a position that is vertically beneath the floor of the box.

[0020] A venting method for a passenger compartment of a truck according to yet another exemplary aspect of the present disclosure includes using a back panel of a cab as a front wall of a cargo area within a box, and venting air from a passenger compartment through an air extractor held by the back panel. The air is vented through the air extractor to an area outside the cargo area of the box.

[0021] In another exemplary embodiment of the foregoing method, the area outside the cargo area of the box is vertically beneath a floor of the box.

[0022] In another exemplary embodiment of any of the foregoing methods, the area outside the cargo area of the box is between an inner panel and an outer panel of a side wall of the box.

[0023] In another example embodiment of any of the foregoing methods, the truck is a truck having a unibody construction.

[0024] The embodiments, examples and alternatives of the preceding paragraphs, the claims, or the following description and drawings, including any of their various aspects or respective individual features, may be taken independently or in any combination. Features described in connection with one embodiment are applicable to all embodiments, unless such features are incompatible.

BRIEF DESCRIPTION OF THE FIGURES

[0025] The various features and advantages of the disclosed examples will become apparent to those skilled in the art from the detailed description. The figures that accompany the detailed description can be briefly described as follows:

[0026] FIG. **1** schematically illustrates a truck having a unibody construction.

[0027] FIG. **2** illustrates a perspective view of a portion of the truck of FIG. **1** showing a cargo area of the truck according to an exemplary embodiment of the present disclosure.

[0028] FIG. **3** illustrates a schematic section view taken at line **3-3** in FIG. **2**.

[0029] FIG. **4** illustrates a highly schematic representation of a passenger compartment and a cargo area from the truck of FIG. **1**.

[0030] FIG. **5** illustrates another perspective view of a portion of the truck of FIG. **1** showing an air venting system according to an exemplary embodiment of the present disclosure.

[0031] FIG. **6** illustrates a perspective, section view taken at line **6-6** in FIG. **5**.

[0032] FIG. **7** illustrates a side view of the section view of FIG. **6**.

[0033] FIG. **8** illustrates another perspective view of the cargo area of FIG. **2**.

[0034] FIG. **9** illustrates a close-up view of a portion of FIG. **8** showing a side wall of a box of the truck.

[0035] FIG. **10** illustrates the view of FIG. **9** with an inner panel of the side wall cut away to show an air extractor according to another exemplary embodiment of the present disclosure.

[0036] FIG. **11** illustrates a perspective, section view taken at the position of the line **6-6** in FIG. **5** of an air venting system according to yet another exemplary embodiment of the present disclosure.

[0037] FIG. **12** illustrates a side view of the section view in FIG. **11**.

DETAILED DESCRIPTION

[0038] This disclosure details exemplary venting systems and methods utilized to vent air from a passenger compartment of a truck. At least one air extractor provides a path for the venting. The truck can be a unibody truck.

[0039] A truck **10** according to an exemplary aspect of the present disclosure is shown in FIG. **1**. The truck **10** has a cab **14** and a box **18** that are supported on wheels **22**. The truck **10** has a unibody construction. Accordingly, in the exemplary embodiment, the cab **14** and the box **18** are not supported on a vehicle frame that is separate and distinct from the cab **14** and the box **18**.

[0040] With reference now to FIGS. **2-7** and continued reference to FIG. **1**, the box **18** provides a cargo area **30**. The box **18** includes a floor **34** that extends in a cross-vehicle direction between a driver side sidewall **38** and a passenger side sidewall **42**. The floor **34** defines a bottom of the cargo area **30** in a Z or vertical direction. The driver side sidewall **38** and the passenger side sidewall **42** establish the respective outboard sides of the cargo area **30**.

[0041] A front wall **46** establishes a forward boundary of the cargo area **30**. The front wall **46** of the cargo area **30** is generally aligned with a C-pillar of the truck **10**.

[0042] A pivotable tailgate (not shown) can establish a rear boundary of the cargo area **30** when the tailgate is in a closed position. The rear of the cargo area **30** is generally aligned with a D-pillar of the truck **10**.

[0043] In this example, the front wall **46** is provided by an exposed section **50** of a cab back panel **54**, which also provides a rear side or boundary of the cab **14**. Thus, the same panel that provides a rear side of the cab **14** provides the front wall **46** of the cargo area **30**.

[0044] In addition to the exposed section **50**, the cab back panel **54** includes a hidden section **58**. The hidden section **58** does not provide the forward boundary of the cargo area **30** as the hidden section **58** is below the cargo area **30**, outboard the cargo area **30**, or both.

[0045] In this example, as shown in FIGS. **6** and **7**, some of the hidden section **58** extends vertically downward from the exposed section **50**. This area of the hidden section **58** is vertically beneath the floor **34**. In contrast, the exposed section **50** is vertically above the floor **34** to provide the front wall **46** of the cargo area **30**.

[0046] For purposes of this disclosure, vertical is with reference to ground and the general orientation of the truck **10** during ordinary operation. Similarly, forward and rear are with reference to the orientation of the truck **10**.

[0047] As the cab back panel **54** provides the front wall **46** of the cargo area **30**, there is no gap between the cab back panel **54** and a front wall of the cargo area **30**. In contrast to the truck **10** having a unibody construction, a truck having a body-on-frame construction would include a first panel providing the cab back panel, and a second panel providing a front panel of the bed. The first panel is spaced along a longitudinal axis of the body-on-frame truck from the second panel to provide a gap between the first panel and the second panel.

[0048] Referring again to the truck **10**, an air extractor **62** is held within the hidden section **58** of the cab back panel **54**. The air extractor **62** within the cab back panel **54** provides part of an air venting system for the truck **10**.

[0049] The cab **14** includes a passenger compartment **66**. The cab back panel **54** establishes a rearmost panel of the passenger compartment **66**. The air extractor **62** can vent air A from within the passenger compartment **66** to an area that is outside the cargo area **30** as shown schematically in FIG. **4**.

[0050] As the air extractor **62** is held within the hidden section **58**, the air extractor **62** opens to an area that is outside the cargo area **30**. In particular, in this example, the air extractor **62** is configured to vent air A between the passenger compartment **68** of the truck **10** and an area that is vertically beneath the floor **34** of the box **18**. This is because the air extractor **62** of the exemplary embodiment is held within a portion of the hidden section **58** of the cab back panel **54** that is beneath the floor **34** of the box **18**,

[0051] The air extractor **62** can include a plurality of individual flaps that open in response to a pressure differential between the passenger compartment **66** and the area beneath the floor **34** of the box **18**. A user closing a door of the cab **14**, for example, may cause a pressure within the passenger compartment **66** to increase. The increase can force open flaps of the air extractor **62**, which enables the venting of air A from the passenger compartment **66** through the air extractor **62** to the area beneath the floor **34** of the box **18**.

[0052] The air extractor **62** is configured such that the flaps close when the pressure differential is not above a threshold level. When closed, the flaps can block debris and fluid outside the passenger compartment **66** from entering the passenger compartment **66** through the air extractor **62**.

[0053] With particular reference to FIGS. **3** and **7**, the floor **34** of the box **18** is elevated vertically with respect to a floor **70** of the cab **14** providing the passenger compartment **66**. This facilitates venting as the hidden section **58** is able to extend vertically beneath the floor **34** enough to hold the air extractor **62**.

[0054] With reference now to FIGS. **8-10**, an air extractor **62**A according to another exemplary aspect of the present disclosure is held within a hidden section **58**A of the cab back panel **54**. The hidden section **58**A is at a position that is outboard of the cargo area **30** such that the air extractor **62**A is configured to vent air A from the passenger compartment **66** provided by the cab **14** to an area that is outboard the cargo area **30**.

[0055] In particular, the area that is outboard of the cargo area **30** is between an inner panel **80** of the driver side sidewall **38** and an outer panel **84** of the driver side sidewall **38**. The air extractor **62**A opens to the area between the inner panel **80** and the outer panel **84** of the driver side sidewall **38**.

[0056] After the air A moves from the passenger compartment **66** through the air extractor **62**A to the area between the inner panel **80** and the outer panel **84**, the air A can pass through a rear wheel opening **88** to an area outside the truck **10**.

[0057] The air extractor **62**A can be considered a side air extractor. The air extractor **62** of FIGS. **3-7** can be considered a lower air extractor. In some examples, the side air extractor **62**A is used together with the lower air extractor **62** such that air A can be vented through air extractors **62** and **62**A to areas beneath the floor **34** of the cargo area **30** and areas outboard the cargo area **30**.

[0058] The air extractor **62**A is shown on a driver side of the truck **10** and as opening to the driver side sidewall **38**. The truck **10** could include another side air extractor on the passenger side of the truck **10** that opens to an area between an inner panel and an outer panel of the passenger side sidewall **42**.

[0059] FIGS. **11** and **12** show an air venting system according to yet another exemplary embodiment of the present disclosure. The air venting system includes an air extractor **62**B and an air extractor **62**C.

[0060] The air extractor **62**B opens to an interior **92** of a cross-member **96** that extends in a cross-vehicle direction. The cross-member **96** has a box section. A forward side of the cross-member **96** is provided by the cab back panel **54**. A support panel **100** can be attached to the cab back panel **54** to complete the box section of the cross-member **96**. The support panel **100** extends longitudinally in a cross-vehicle direction.

[0061] Air can vent through the air extractor **62**B from the passenger compartment **66** into the interior **92** of the cross-member **96**. The portion of the cab back panel **54** that provides some of the cross-member **96** is within the hidden section **58** of the cab back panel **54** as this area of the cab back panel **54** is vertically beneath the floor **34** of the box **18**.

[0062] The air extractor **62**B can be considered a lower air extractor and used within the air venting system along with the air extractor **62**C. The air extractor **62**C can then be considered an upper air extractor relative to the lower air extractor **62**B.

[0063] The upper air extractor **62**C can vent air from the passenger compartment **66** into an interior **104** of a cross-member **108**. The exposed section **50** of the cab back panel **54** provides generally one side of the cross-member **108**. A support panel **112** can be secured to the exposed section **50** of the cab back panel **54** to complete a box section for the cross-member **108**. The support panel **112** can extend longitudinally in a cross-vehicle direction. The cross-member **108** can be considered an upper cross-member, while the cross-member **96** is a lower cross-member.

[0064] In the above embodiments, the exemplary air extractors **62-62**C do not open to the cargo area **30**. Thus, the likelihood of damage to the air extractors **62-62**C due to, for example, cargo loaded within the cargo area **30** is reduced. Further, since the air extractors **62-62**C are concealed and substantially hidden from view, no bed liner is required to cover the air extractors for aesthetic reasons. In the exemplary embodiments, the air extractors **62-62**C are uncovered by any bed liner within the cargo area **30**. Also, since the exemplary air extractors **62-62**C do not open to the cargo area, the venting of air A through the air extractors **62-62**C is not blocked by cargo within the cargo area.

[0065] Generally, a venting method utilizing any of the air extractors **62-62**C includes using a back panel of a cab as a front wall of a cargo area within a bed of a unibody truck. The method then includes venting air from a passenger compartment of the unibody truck through an air extractor that is held by the back panel. The air vented through the air extractor is vented to an area that is outside the cargo area of the bed. The air can be vented through the air extractor through an area that is vertically beneath a floor of the bed, or outboard the cargo bed area.

[0066] The preceding description is exemplary rather than limiting in nature. Variations and modifications to the disclosed examples may become apparent to those skilled in the art that do not necessarily depart from the essence of this disclosure. Thus, the scope of legal protection given to this disclosure can only be determined by studying the following claims.

What is claimed is:

1. An air venting system, comprising:

a box of a truck, the box providing a cargo area;

a cab back panel of the truck, the cab back panel having a exposed section that provides a front wall of the cargo area, the cab back panel having a hidden section outside the cargo area; and

an air extractor held within the hidden section of the cab back panel.

2. The air venting system of claim **1**, wherein the air extractor opens to an area that is outside the cargo area such that the air extractor is configured to vent air from a passenger compartment of the truck to an area that is outside the cargo area.

3. The air venting system of claim **1**, wherein the air extractor is held within the hidden section of the cab back panel at a position that is vertically beneath a floor of the box such that the air extractor is configured to vent air from a passenger compartment of the truck to an area vertically beneath the floor of the box.

4. The air venting system of claim **3**, wherein the floor of the box is vertically elevated relative to a floor of the passenger compartment.

5. The air venting system of claim **1**, wherein the air extractor is held within the hidden section of the cab back panel at a position that is outboard of the cargo area such that the air extractor is configured to vent air from a passenger compartment of the truck to an area outboard the cargo area.

6. The air venting system of claim **5**, further comprising a side wall of the box, the side wall having an inner panel and an outer panel, the air extractor opening to an area between the inner panel and the outer panel such that the air extractor is configured to vent air from the passenger compartment to the area between the inner panel and the outer panel.

7. The air venting system of claim **6**, wherein the outer panel includes a rear wheel opening that communicates air from the area between the inner panel and the outer panel to an area outside the truck.

8. The air venting system of claim **5**, wherein the air extractor a side air extractor, and further comprising a lower air extractor that is held within another portion of the hidden section of the cab back panel at a position that is vertically beneath a floor of the box such that the lower air extractor is configured to vent air from a passenger compartment of the truck to an area vertically beneath the floor of the box.

9. The air venting system of claim **8**, wherein the side air extractor is a driver side air extractor that is configured to vent air from the passenger compartment to the area between the inner panel and the outer panel on a driver side of the cargo area, and further comprising a passenger side air extractor that is held within another portion of the hidden section and is configured to vent air from the passenger compartment to an area that is between an inner panel and an outer panel of a side wall on a passenger side of the cargo area.

10. The air venting system of claim **1**, wherein the air extractor is configured to vent air from the passenger compartment into an interior of a cross-member that extends in a cross-vehicle direction, the cross-member having a box section.

11. The air venting system of claim **10**, wherein the air extractor is a lower air extractor and the cross-member is a lower cross-member, and further comprising an upper air extractor held within the exposed section of the cab back panel and configured to vent air from the passenger compartment into an interior of an upper cross-member that extends in a cross-vehicle direction.

12. The air extractor of claim **11**, wherein the hidden section of the cab back panel provides one side of the lower cross-member, and the exposed section of the cab back panel provides one side of the upper cross-member.

13. The air venting system of claim **1**, wherein the exposed section of the cab back panel is exposed within the cargo area and is uncovered by any bed liner.

14. The air venting system of claim **1**, wherein the truck has a unibody construction.

15. An air venting system, comprising:

a box of a unibody truck, the box providing a cargo area;

a cab back panel of the unibody truck;

a support panel extending longitudinally in a cross-vehicle direction, the support panel joined to the cab back panel to provide a cross-member; and

an air extractor held within the cab back panel, the air extractor configured to vent air from a passenger compartment of the unibody truck into an interior of the cross-member.

16. The air extractor of claim **15**, wherein the support panel is an upper support member, the air extractor is an upper air extractor, and the cross-member is an upper cross-member, the interior of the upper cross-member vertically above a floor of the box such that the upper air extractor vents air from the passenger compartment of the unibody truck into the interior of the upper cross-member at a position vertically above the floor of the box, and further comprising

a lower support panel extending longitudinally in a cross-vehicle direction and a lower air extractor, the lower support panel joined to the cab back panel to provide a lower cross-member vertically beneath the floor of the box, the lower air extractor configured to vent air from the passenger compartment of the unibody truck to an interior of the lower cross-member at a position that is vertically beneath the floor of the box.

17. A venting method for a passenger compartment of a truck, comprising:

using a back panel of a cab as a front wall of a cargo area within a box; and

venting air from a passenger compartment through an air extractor held by the back panel, the air vented through the air extractor to an area outside the cargo area of the box.

18. The venting method of claim **17**, wherein the area outside the cargo area of the box is vertically beneath a floor of the box.

19. The venting method of claim **17**, wherein the area outside the cargo area of the box is between an inner panel and an outer panel of a side wall of the box.

20. The venting method of claim **17**, wherein the truck is a truck having a unibody construction.

* * * * *