US 20180116547A1

(19) United States

(12) Patent Application Publication

Justice et al.

(10) Pub. No.: US 2018/0116547 A1

(43) Pub. Date: May 3, 2018

(54) **RING-SHAPED SKIN SENSOR**

(71) Applicant: **Microsoft Technology Licensing, LLC**, Redmond, WA (US)

(72) Inventors: **Gregory Kim Justice**, Redmond, WA (US); **Farah Shariff**, Kirkland, WA (US); **Scott Dallmeyer**, Seattle, WA (US)

(73) Assignee: **Microsoft Technology Licensing, LLC**, Redmond, WA (US)

(21) Appl. No.: **15/800,756**

(22) Filed: **Nov. 1, 2017**

Related U.S. Application Data

(63) Continuation of application No. 14/292,484, filed on May 30, 2014, now Pat. No. 9,833,164.

Publication Classification

(51) **Int. Cl.**

A61B 5/053	(2006.01)
A61B 5/0205	(2006.01)
A61B 5/00	(2006.01)
A61B 5/024	(2006.01)
A61B 5/11	(2006.01)

(52) **U.S. Cl.**

CPC ***A61B 5/0533*** (2013.01); *A61B 5/6813* (2013.01); ***A61B 5/6824*** (2013.01); ***A61B 5/02427*** (2013.01); ***A61B 5/681*** (2013.01); *A61B 2560/0242* (2013.01); *A61B 5/0015* (2013.01); *A61B 5/1112* (2013.01); *A61B 5/02438* (2013.01); *A61B 5/02416* (2013.01); *A61B 2560/0468* (2013.01); *A61B 2562/0223* (2013.01); *A61B 2562/06* (2013.01); *A61B 2562/14* (2013.01); ***A61B 5/0205*** (2013.01)

(57) **ABSTRACT**

A sensory-and-logic system includes a ring-shaped, electrically-conductive skin sensor sized and shaped to form an electrical connection with human skin, and an electrical component surrounded by the ring-shaped, electrically-conductive skin sensor.

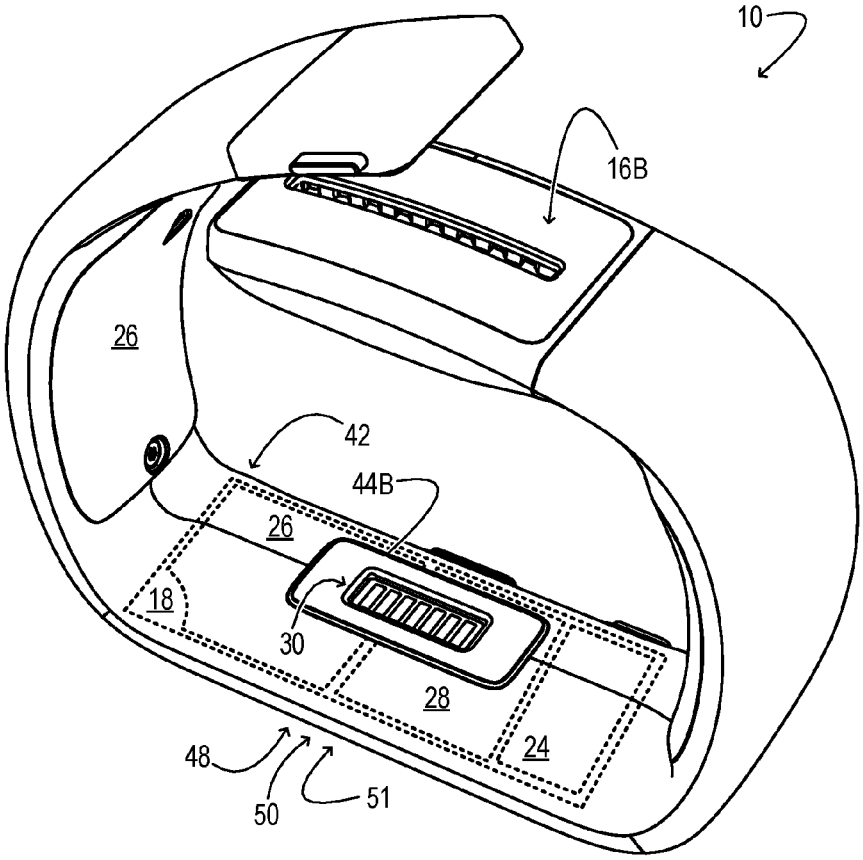

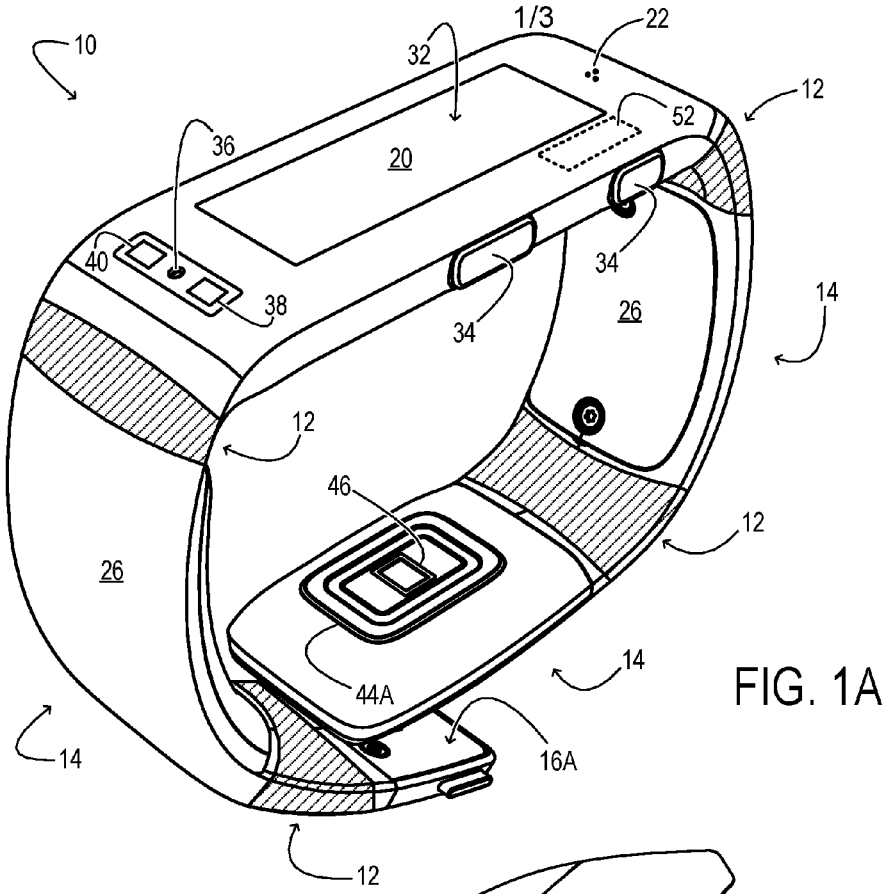
1/3
10
32
22
12
52
36
20
40
38
34
34
26
14
12
46
12
26
44A
14
14
16A
12

FIG. 1A

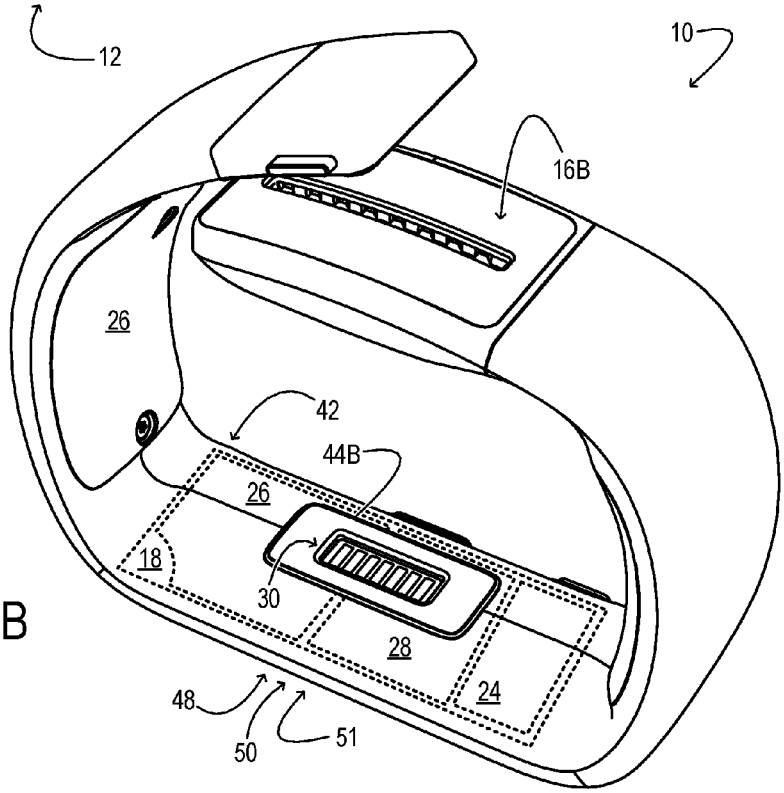
10
16B
26
42
44B
26
18
30
28
24
48
50
51

FIG. 1B

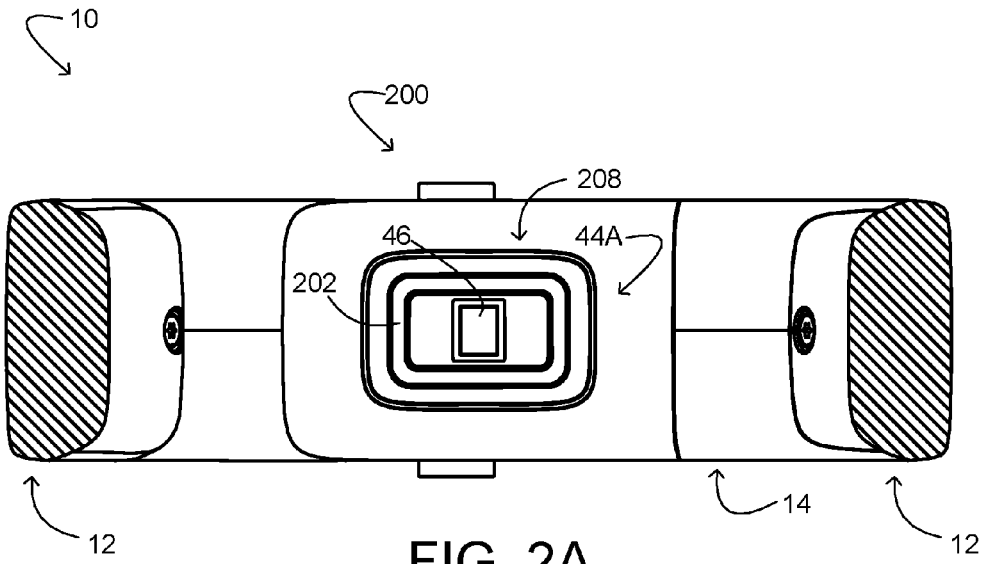

FIG. 2A

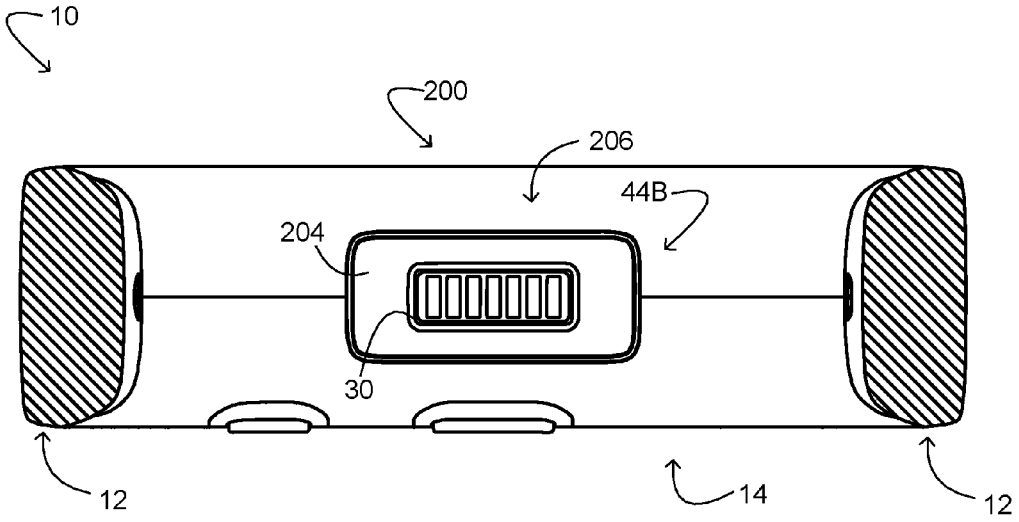

FIG. 2B

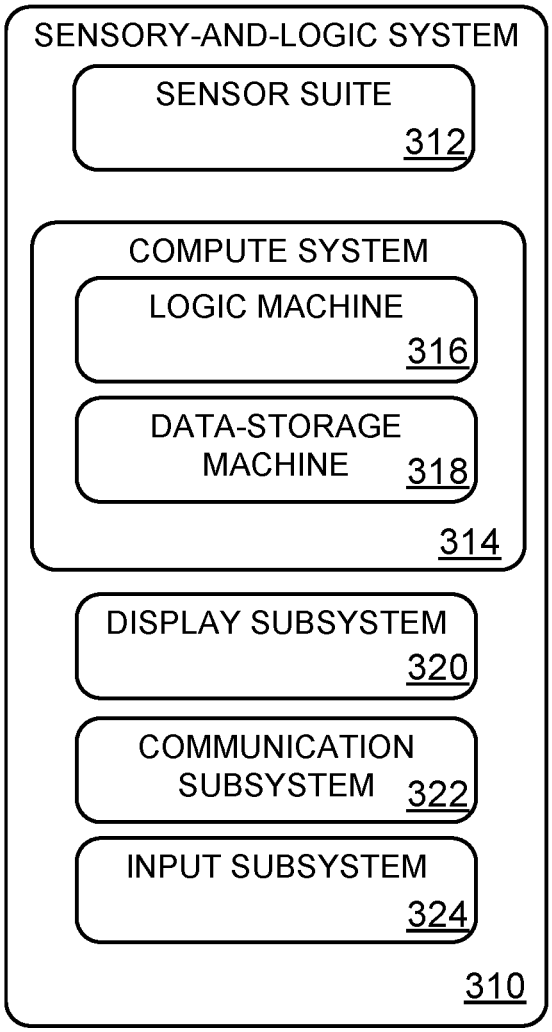
SENSORY-AND-LOGIC SYSTEM
SENSOR SUITE
312
COMPUTE SYSTEM
LOGIC MACHINE
316
DATA-STORAGE MACHINE
318
314
DISPLAY SUBSYSTEM
320
COMMUNICATION SUBSYSTEM
322
INPUT SUBSYSTEM
324
310

FIG. 3

RING-SHAPED SKIN SENSOR

CROSS REFERENCE TO RELATED APPLICATIONS

[0001] This application is a continuation of U.S. patent application Ser. No. 14/292,484, filed May 30, 2014, the entire contents of which is hereby incorporated herein by reference for all purposes.

BACKGROUND

[0002] Electrically-conductive skin sensors may be incorporated into a wide variety of electronic devices.

BRIEF DESCRIPTION OF THE DRAWINGS

[0003] FIGS. **1**A, **1**B, **2**A, and **2**B show an exemplary wearable electronic device.

[0004] FIG. **3** is a block diagram of an example computing device.

DETAILED DESCRIPTION

[0005] Electrically-conductive skin sensors, also referred to as Galvanic Skin Response (GSR) contacts, may be included in a wearable electronic device, such as a wrist band. The GSR contacts may be used, for example, to detect the stress level or other characteristic of the wearer of the device. Two electrically-conductive skin sensors included to measure the resistance of the skin may provide a more accurate measurement if held in constant contact with the skin of the wearer. However, given the movement of the wrist as well as differing shapes and sizes of wrists of different users, it may be difficult to maintain both sensors in close contact with the skin. To provide an accurate measurement of the resistance of a user's skin, some electrically-conductive skin sensors may be made large and knobby to improve contact with the skin of the user.

[0006] In another example, a sensory-and-logic system comprises a ring-shaped, electrically-conductive skin sensor sized and shaped to form an electrical connection with human skin, and an electrical component surrounded by the ring-shaped, electrically-conductive skin sensor.

[0007] The electrically-conductive skin sensors may be ring-shaped in order to substantially surround a desired electrical component. In some examples, the desired electrical component is a component that also must be positioned proximate the skin of the wearer, such as an optical heart rate sensor. Thus, by providing the electrically-conductive skin sensor around another body-sensing component, the electrically-conductive skin sensor may be held in contact with the skin along with the additional body-sensing component. Additionally, in some examples, the desired electrical component may be inflexible, such as an optical heart rate sensor, power connector, or other component. By architecturally aligning the inflexible electrically-conductive skin sensors with other components of the wearable electronic device that are inflexible, the number of inflexible regions present in the wearable electronic device may be reduced. This may benefit the user experience by providing a more flexible and comfortable wearable device.

[0008] One electrically-conductive skin sensor may be positioned on a first side of the wearable electronic device (e.g., underside of the wrist) while the other electrically-conductive skin sensor may be positioned on the opposing side of the device (e.g., topside of the wrist). The flexibility and latching aspects of the wearable electronic device may be configured such that the two electrically-conductive skin sensors are held in close contact with the skin of the wearer.

[0009] While described below in the context of a portable wearable electronic device, the examples of the electrically-conductive skin sensor of this disclosure may be implemented with different types of sensor and logic systems. For example, the electrically-conductive skin sensor may be used in stationary or mobile equipment not intended to be worn by the user, and instead, intended to be contacted by the user by placing a body part, e.g., a hand or foot, on the electrically-conductive skin sensor.

[0010] FIGS. **1**A and **1**B show aspects of an example sensory-and-logic system in the form of a wearable electronic device **10**. The illustrated device is band-shaped and may be worn around a wrist. Device **10** includes at least four flexion regions **12** linking less flexible regions **14**. The flexion regions of device **10** may be elastomeric in some examples. Fastening componentry **16**A and **16**B is arranged at both ends of the device. The flexion regions and fastening componentry enable the device to be closed into a loop and to be worn on a user's wrist. In other implementations, wearable electronic devices of a more elongate band shape may be worn around the user's bicep, waist, chest, ankle, leg, head, or other body part. The device, for example, may take the form of eye glasses, a head band, an arm-band, an ankle band, a chest strap, or an implantable device to be implanted in tissue.

[0011] Wearable electronic device **10** includes various functional components integrated into regions **14**. In particular, the electronic device includes a compute system **18**, display **20**, loudspeaker **22**, communication suite **24**, and various sensors. These components draw power from one or more energy-storage cells **26**. A battery—e.g., a lithium ion battery—is one type of energy-storage cell suitable for this purpose. Examples of alternative energy-storage cells include super- and ultra-capacitors. In devices worn on the user's wrist, the energy-storage cells may be curved to fit the wrist, as shown in the drawings.

[0012] In general, energy-storage cells **26** may be replaceable and/or rechargeable. In some examples, recharge power may be provided through a universal serial bus (USB) port **30**, which includes a magnetic latch to releasably secure a complementary USB connector. In other examples, the energy storage cells may be recharged by wireless inductive or ambient-light charging. In still other examples, the wearable electronic device may include electro-mechanical componentry to recharge the energy storage cells from the user's adventitious or purposeful body motion. For example, batteries or capacitors may be charged via an electromechanical generator integrated into device **10**. The generator may be turned by a mechanical armature that turns while the user is moving and wearing device **10**.

[0013] In wearable electronic device **10**, compute system **18** is situated below display **20** and operatively coupled to the display, along with loudspeaker **22**, communication suite **24**, and the various sensors. The compute system includes a data-storage machine **27** to hold data and instructions, and a logic machine **28** to execute the instructions. Aspects of the compute system are described in further detail with reference to FIG. **3**.

[0014] Display **20** may be any suitable type of display. In some configurations, a thin, low-power light emitting diode (LED) array or a liquid-crystal display (LCD) array may be

used. An LCD array may be backlit in some implementations. In other implementations, a reflective LCD array (e.g., a liquid crystal on silicon, LCOS array) may be frontlit via ambient light. A curved display may also be used. Further, AMOLED displays or quantum dot displays may be used.

[0015] Communication suite **24** may include any appropriate wired or wireless communications componentry. In FIGS. **1**A and **1**B, the communications suite includes USB port **30**, which may be used for exchanging data between wearable electronic device **10** and other computer systems, as well as providing recharge power. The communication suite may further include two-way Bluetooth, Wi-Fi, cellular, near-field communication and/or other radios. In some implementations, the communication suite may include an additional transceiver for optical, line-of-sight (e.g., infrared) communication.

[0016] In wearable electronic device **10**, touch-screen sensor **32** is coupled to display **20** and configured to receive touch input from the user. The touch sensor may be resistive, capacitive, or optically based. Pushbutton sensors may be used to detect the state of push buttons **34**, which may include rockers. Input from the pushbutton sensors may be used to enact a home-key or on-off feature, control audio volume, turn the microphone on or off, or other function.

[0017] FIGS. **1**A and **1**B show various other sensors of wearable electronic device **10**. Such sensors include microphone **36**, visible-light sensor **38**, ultraviolet sensor **40**, and ambient temperature sensor **42**. The microphone provides input to compute system **18** that may be used to measure the ambient sound level or receive voice commands from the wearer. Input from the visible-light sensor, ultraviolet sensor, and ambient temperature sensor may be used to assess aspects of the wearer's environment—i.e., the temperature, overall lighting level, and whether the wearer is indoors or outdoors.

[0018] FIGS. **1**A and **1**B show a pair of ring-shaped contact sensor modules **44**A and **44**B, which contact the wearer's skin when wearable electronic device **10** is worn. The ring-shaped contact sensor modules may include independent or cooperating sensor elements, to provide a plurality of sensory functions. For example, the ring-shaped contact sensor modules may provide an electrical resistance and/or capacitance sensory function, which measures the electrical resistance and/or capacitance of the wearer's skin. Compute system **18** may use such input to assess whether or not the device is being worn, a stress level of the user, or other attributes. In some implementations, the sensory function may be used to determine how tightly the wearable electronic device is being worn. In the illustrated configuration, the separation between the two ring-shaped contact-sensor modules provides a relatively long electrical path length, for more accurate measurement of skin resistance. In some examples, a ring-shaped contact sensor module may also provide measurement of the wearer's skin temperature. Arranged inside ring-shaped contact sensor module **44**B in the illustrated configuration is an electrical component in the form of an optical pulse rate sensor **46**. The optical pulse-rate sensor may include an LED emitter and matched photodiode to detect blood flow through the capillaries in the skin and thereby provide a measurement of the wearer's pulse rate. Arranged inside ring-shaped contact sensor module **44**A is an electrical component in the form of USB port **30**.

[0019] Wearable electronic device **10** may also include motion sensing componentry, such as an accelerometer **48**, gyroscope **50**, and magnetometer **51**. The accelerometer and gyroscope may furnish inertial and/or rotation rate data along three orthogonal axes as well as rotational data about the three axes, for a combined six degrees of freedom. This sensory data can be used to provide a pedometer/calorie-counting function, for example. Data from the accelerometer and gyroscope may be combined with geomagnetic data from the magnetometer to further define the inertial and rotational data in terms of geographic orientation. The wearable electronic device may also include a global positioning system (GPS) receiver **52** for determining the wearer's geographic location and/or velocity. In some configurations, the antenna of the GPS receiver may be relatively flexible and extend into flexion regions **12**.

[0020] Compute system **18**, via the sensory functions described herein, is configured to acquire various forms of information about the wearer of wearable electronic device **10**. Such information must be acquired and used with utmost respect for the wearer's privacy. Accordingly, the sensory functions may be enacted subject to opt-in participation of the wearer. In implementations where personal data is collected on the device and transmitted to a remote system for processing, that data may be anonymized. In other examples, personal data may be confined to the wearable electronic device, and only non-personal, summary data transmitted to the remote system.

[0021] FIGS. **2**A and **2**B show a bottom and a top, respectively, of an inside surface of the sensory-and-logic system of FIGS. **1**A and **1**B (e.g., wearable electronic device **10**). Wearable electronic device **10** is illustrated in the form of a wrist band, with the inside surface corresponding to the inner portion of the wrist band that faces the skin of a user when the wearable electronic device is worn by the user.

[0022] As explained above, the sensory-and-logic system may include one or more ring-shaped contact sensor modules. In one example, each contact sensor module may include an electrically-conductive skin sensor surrounding an electrical component. As illustrated in FIGS. **2**A and **2**B, the sensory-and-logic system includes two contact sensor modules, first contact sensor module **44**A and second contact sensor module **44**B, explained in detail below. Each contact sensor module is supported by a wrist band assembly **200**. The wrist band assembly **200** may include one or more flexion regions **12** and one or more less flexible regions **14**, as explained above.

[0023] Referring now to first contact sensor module **44**A, it is included in a bottom portion of the inside surface of the wearable electronic device **10**, shown in FIG. **2**A. First contact sensor module **44**A includes a first ring-shaped, electrically-conductive skin sensor **202**, sized and shaped to contact human skin, surrounding optical pulse rate sensor **46**.

[0024] First skin sensor **202** measures the electrical conductance of the skin, which varies depending on the moisture (e.g., sweat) of the skin, also referred to as the galvanic skin response or galvanic skin potential. First skin sensor **202** comprises an electrode that is electrically coupled to a device (e.g., compute system **18**) configured to measure the electrical resistance between the electrode of the skin sensor and a second, distally placed electrode (included as part of second skin sensor **204**, described below). The electrode may comprise an outer surface of the first skin sensor **202**

and may be constructed from any suitable metal or metal alloy, such as aluminum in one example. The outward surface of the first skin sensor **202** may be finished (e.g., with a satin finish) in order to provide a smooth surface that is comfortable to the skin of a wearer. Further, in some examples, the outward surface of first skin sensor **202** may include a plurality of protrusions and/or a rough finish in order to promote contact with a wearer's skin.

[0025] First skin sensor **202** may be generally ring-shaped in order to surround the optical pulse rate sensor **46**. The first skin sensor **202** may include any number of straight and/or curved segments. For example, the first skin sensor **202** may be generally rectangular with rounded corners, generally oval, generally polygonal, etc. Further, the ring-shaped skin sensor need not completely encircle an interior electrical component. For example, a U-shaped, L-shaped, or C-shaped sensor may be used.

[0026] Second contact sensor module **44**B is included in a top portion of the inside of the wearable electronic device, shown in FIG. **2**B. Second contact sensor module **44**B includes a second ring-shaped electrically conductive skin sensor **204**, sized and shaped to contact human skin, surrounding a power and data connector, such as a universal serial bus (USB) port **30**.

[0027] Second skin sensor **204** may be similar to first skin sensor **202**. For example, second skin sensor **204** may be generally ring-shaped in order to surround the USB port **30**. The second skin sensor **204** may include any number of straight and/or curved segments, may be generally rectangular with rounded corners, generally oval, generally polygonal, U-shaped, L-shaped, C-shaped, or other shape that may provide contact with a user's skin without pinching the user or otherwise creating user discomfort.

[0028] Second skin sensor **204** also comprises an electrode that is electrically coupled to a device configured to measure the electrical resistance between the electrode of the skin sensor and a second, distally placed electrode (e.g., the electrode of first skin sensor **202**). The electrode may comprise an outer surface of the second skin sensor **204** and may be constructed from any suitable metal or metal alloy, such as aluminum in one example. The outward surface of the second skin sensor **204** may be finished (e.g., with a satin finish) in order to provide a smooth surface that is comfortable to the skin of a wearer. Further, in some examples, the outward surface of second skin sensor **204** may include a plurality of protrusions and/or a rough finish in order to ensure contact with a wearer's skin and/or to facilitate a connection with a power and data connector. The first and second skin sensors may be identical to one another, or the first and second skin sensors can be different from one another (e.g., as shown in FIGS. **2**A and **2**B). Differences may include size, shape, material, finish, or other attributes.

[0029] USB port **30** comprises a plurality of charging contact pads for connecting to associated electrical contacts of a power and data connector. The charging contact pads may be formed of an electrically conductive material, such as gold, and disposed on a frame formed from non-electrically conductive material, such as plastic. The non-electrically conductive material may be utilized to isolate the electrical power and/or signaling provided to and from each of the charging contact pads. The charging contact pads may be electrically connected to one or more compute systems within the wearable electronic device **10**. For example, a contact pad configured to receive a power signal may be electrically connected to a battery (e.g., energy storage-cell **26** of FIGS. **1**A and **1**B, interposed between the first and second contact sensor modules) and/or recharging system. A contact pad configured to receive a data signal may be electrically connected to a logic system and/or data-storage system of the wearable electronic device **10**.

[0030] The first contact sensor module **44**A and the second contact sensor module **44**B may be spaced apart (e.g., located distally) from each other by a suitable distance in order to provide measurable resistance between the electrodes of the skin sensors of the contact sensor modules. Additionally, the contact sensor modules may be positioned to hold the skin sensors in close contact with the skin of the user. For example, the contact sensor modules may be integrated into opposing surfaces of the wearable electronic device such that the skin sensors are naturally held in contact with the skin on opposite sides of the wrist.

[0031] Additionally, as explained previously, the first and/or second electrically-conductive skin sensors may be incorporated into already-inflexible regions of the wearable electronic device **10**, to decrease the number of inflexible regions present in the wearable electronic device. For example, as illustrated, the USB port **30** and the second electrically-conductive skin sensor **204** are constituent components of a rigid display module **206** including display **20** and additional components. Further, the optical pulse rate sensor **46** and the first electrically-conductive skin sensor **202** are constituent components of a rigid clasp module **210** including a latching mechanism to securely close the wearable electronic device **10**.

[0032] In some examples, the rigid clasp module **210** includes a rigid or semi-rigid pillow to house the optical pulse rate sensor **46** and the first electrically-conductive skin sensor **202**. The pillow may include a spring, flexible coating, and/or other components that elevate the optical pulse rate sensor **46** and the first electrically-conductive skin sensor **202** above the wrist band assembly **200** and urge the optical pulse rate sensor **46** and the first electrically-conductive skin sensor **202** into the skin of the wearer, ensuring a close contact between the sensors and the skin of the wearer.

[0033] Further, compute system **18** may be operably coupled to each of the first electrically-conductive skin sensor and second electrically-conductive skin sensor in order to receive output from the first and second electrically-conductive skin sensors to measure the resistance of the wearer's skin. Compute system **18** may also be operably coupled to the optical pulse rate sensor and universal serial bus port.

[0034] While first electrically-conductive skin sensor **202** is described above as surrounding an optical pulse rate monitor and positioned proximate a display (as part of the rigid display module), other configurations are possible. For example, the first electrically-conductive skin sensor **202** may surround a different electrical component of the wearable electronic device, such as the GPS receiver, accelerometer, etc., and/or be a constituent component of a different rigid module, such as a rigid battery box module. Similarly, the second electrically-conductive skin sensor **204** may surround an electrical component other than the USB port and/or be included in a different rigid module.

[0035] The electrically-conductive skin sensor and electrical component of the first contact sensor module and/or second contact sensor module may be generally co-planar in

one example. In another example, the electrical component may be slightly elevated or recessed relative to the electrically-conductive skin sensor (e.g., less than 1 mm). In a still further example, the electrical component may be significantly elevated or recessed relative to the electrically-conductive skin sensor (e.g., greater than 1 mm).

[0036] As evident from the foregoing description, the methods and processes described herein may be tied to a sensory-and-logic system of one or more machines. Such methods and processes may be implemented as a computer-application program or service, an application-programming interface (API), a library, firmware, and/or other computer-program product. FIGS. **1**A and **1**B show one, non-limiting example of a sensory-and-logic system to enact the methods and processes described herein. However, these methods and process may also be enacted on sensory-and-logic systems of other configurations and form factors, as shown schematically in FIG. **3**.

[0037] FIG. **3** schematically shows a form-agnostic sensory-and-logic system **310** that includes a sensor suite **312** operatively coupled to a compute system **314**. The compute system includes a logic machine **316** and a data-storage machine **318**. The compute system is operatively coupled to a display subsystem **320**, a communication subsystem **322**, an input subsystem **324**, and/or other components not shown in FIG. **3**.

[0038] Logic machine **316** includes one or more physical devices configured to execute instructions. The logic machine may be configured to execute instructions that are part of one or more applications, services, programs, routines, libraries, objects, components, data structures, or other logical constructs. Such instructions may be implemented to perform a task, implement a data type, transform the state of one or more components, achieve a technical effect, or otherwise arrive at a desired result.

[0039] Logic machine **316** may include one or more processors configured to execute software instructions. Additionally or alternatively, the logic machine may include one or more hardware or firmware logic machines configured to execute hardware or firmware instructions. Processors of the logic machine may be single-core or multi-core, and the instructions executed thereon may be configured for sequential, parallel, and/or distributed processing. Individual components of a logic machine optionally may be distributed among two or more separate devices, which may be remotely located and/or configured for coordinated processing. Aspects of a logic machine may be virtualized and executed by remotely accessible, networked computing devices in a cloud-computing configuration.

[0040] Data-storage machine **318** includes one or more physical devices configured to hold instructions executable by logic machine **316** to implement the methods and processes described herein. When such methods and processes are implemented, the state of the data-storage machine may be transformed—e.g., to hold different data. The data-storage machine may include removable and/or built-in devices; it may include optical memory (e.g., CD, DVD, HD-DVD, Blu-Ray Disc, etc.), semiconductor memory (e.g., RAM, EPROM, EEPROM, etc.), and/or magnetic memory (e.g., hard-disk drive, floppy-disk drive, tape drive, MRAM, etc.), among others. The data-storage machine may include volatile, nonvolatile, dynamic, static, read/write, read-only, random-access, sequential-access, location-addressable, file-addressable, and/or content-addressable devices.

[0041] It will be appreciated that data-storage machine **318** includes one or more physical devices. However, aspects of the instructions described herein alternatively may be propagated by a communication medium (e.g., an electromagnetic signal, an optical signal, etc.) that is not held by a physical device for a finite duration.

[0042] Aspects of logic machine **316** and data-storage machine **318** may be integrated together into one or more hardware-logic components. Such hardware-logic components may include field-programmable gate arrays (FPGAs), program- and application-specific integrated circuits (PASIC/ASICs), program- and application-specific standard products (PSSP/ASSPs), system-on-a-chip (SOC), and complex programmable logic devices (CPLDs), for example.

[0043] Display subsystem **320** may be used to present a visual representation of data held by data-storage machine **318**. This visual representation may take the form of a graphical user interface (GUI). As the herein described methods and processes change the data held by the storage machine, and thus transform the state of the storage machine, the state of display subsystem **320** may likewise be transformed to visually represent changes in the underlying data. Display subsystem **320** may include one or more display subsystem devices utilizing virtually any type of technology. Such display subsystem devices may be combined with logic machine **316** and/or data-storage machine **318** in a shared enclosure, or such display subsystem devices may be peripheral display subsystem devices. Display **20** of FIGS. **1**A and **1**B is an example of display subsystem **320**.

[0044] Communication subsystem **322** may be configured to communicatively couple compute system **314** to one or more other computing devices. The communication subsystem may include wired and/or wireless communication devices compatible with one or more different communication protocols. As non-limiting examples, the communication subsystem may be configured for communication via a wireless telephone network, a local- or wide-area network, and/or the Internet. Communication suite **24** of FIGS. **1**A and **1**B is an example of communication subsystem **322**.

[0045] Input subsystem **324** may comprise or interface with one or more user-input devices such as a keyboard, mouse, touch screen, or game controller. In some embodiments, the input subsystem may comprise or interface with selected natural user input (NUI) componentry. Such componentry may be integrated or peripheral, and the transduction and/or processing of input actions may be handled on- or off-board. Example NUI componentry may include a microphone for speech and/or voice recognition; an infrared, color, stereoscopic, and/or depth camera for machine vision and/or gesture recognition; a head tracker, eye tracker, accelerometer, and/or gyroscope for motion detection and/or intent recognition; as well as electric-field sensing componentry for assessing brain activity. Touch screen sensor **32** and push buttons **34** of FIGS. **1**A and **1**B are examples of input subsystem **324**.

[0046] Sensor suite **312** may include one or more different sensors—e.g., a touch-screen sensor, push-button sensor, microphone, visible-light sensor, ultraviolet sensor, ambient-temperature sensor, contact sensors, optical pulse-rate

sensor, accelerometer, gyroscope, magnetometer, and/or GPS receiver—as described above with reference to FIGS. **1**A and **1**B.

[0047] It will be understood that the configurations and approaches described herein are exemplary in nature, and that these specific implementations or examples are not to be taken in a limiting sense, because numerous variations are feasible. The specific routines or methods described herein may represent one or more processing strategies. As such, various acts shown or described may be performed in the sequence shown or described, in other sequences, in parallel, or omitted.

[0048] The subject matter of this disclosure includes all novel and non-obvious combinations and sub-combinations of the various processes, systems and configurations, and other features, functions, acts, and/or properties disclosed herein, as well as any and all equivalents thereof.

1. A sensory-and-logic system, comprising:

a power and data connector; and

a ring-shaped, electrically-conductive skin sensor surrounding the power and data connector, the ring-shaped, electrically-conductive skin sensor sized and shaped to form an electrical connection with human skin.

2. The sensory-and-logic system of claim **1**, wherein the power and data connector includes a universal serial bus port.

3. The sensory-and-logic system of claim **1**, further comprising a wrist band assembly supporting the power and data connector and the ring-shaped, electrically-conductive skin sensor.

4. The sensory-and-logic system of claim **1**, wherein the ring-shaped, electrically-conductive skin sensor is a first ring-shaped, electrically-conductive skin sensor, and further comprising a second ring-shaped, electrically-conductive skin sensor distally located relative to the first ring-shaped, electrically-conductive skin sensor.

5. The sensory-and-logic system of claim **4**, wherein the first ring-shaped, electrically-conductive skin sensor and the second ring-shaped, electrically-conductive skin sensor are distally supported by opposing portions of a wrist band assembly.

6. The sensory-and-logic system of claim **4**, wherein the second ring-shaped, electrically conductive skin sensor surrounds an optical pulse rate sensor.

7. A sensory-and-logic system, comprising:

a universal serial bus port; and

a ring-shaped, electrically-conductive skin sensor surrounding the universal serial bus port, the ring-shaped, electrically-conductive skin sensor sized and shaped to form an electrical connection with human skin.

8. The sensory-and-logic system of claim **7**, further comprising a wrist band assembly supporting the universal serial bus port and the ring-shaped, electrically-conductive skin sensor.

9. The sensory-and-logic system of claim **7**, wherein the ring-shaped, electrically-conductive skin sensor is a first ring-shaped, electrically-conductive skin sensor, and further comprising a second ring-shaped, electrically-conductive skin sensor distally located relative to the first ring-shaped, electrically-conductive skin sensor.

10. The sensory-and-logic system of claim **9**, wherein the first ring-shaped, electrically-conductive skin sensor and the second ring-shaped, electrically-conductive skin sensor are distally supported by opposing portions of a wrist band assembly.

11. The sensory-and-logic system of claim **9**, wherein the second ring-shaped, electrically conductive skin sensor surrounds an optical pulse rate sensor.

12. A sensory-and-logic system, comprising:

a ring-shaped, electrically-conductive skin sensor sized and shaped to form an electrical connection with human skin; and

an electrical component surrounded by the ring-shaped, electrically-conductive skin sensor.

13. The sensory-and-logic system of claim **12**, wherein the electrical component includes a power and data connector.

14. The sensory-and-logic system of claim **13**, wherein the power and data connector includes a universal serial bus port.

15. The sensory-and-logic system of claim **12**, wherein the electrical component includes a second sensor, different than the ring-shaped, electrically-conductive skin sensor.

16. The sensory-and-logic system of claim **15**, wherein the second sensor is an optical pulse rate sensor.

17. The sensory-and-logic system of claim **12**, wherein the ring-shaped, electrically-conductive skin sensor is a first ring-shaped, electrically-conductive skin sensor, and further comprising a second ring-shaped, electrically-conductive skin sensor distally located relative to the first ring-shaped, electrically-conductive skin sensor.

18. The sensory-and-logic system of claim **17**, wherein the first ring-shaped, electrically-conductive skin sensor and the second ring-shaped, electrically-conductive skin sensor are distally supported by opposing portions of a wrist band assembly.

19. The sensory-and-logic system of claim **17**, wherein the second ring-shaped, electrically conductive skin sensor surrounds a second electrical component.

20. The sensory-and-logic system of claim **12**, further comprising a compute system operably coupled to the ring-shaped, electrically-conductive skin sensor and the electrical component.

* * * * *