US 20210374655A1

(19) United States
(12) Patent Application Publication
Sweeney et al.
(10) Pub. No.: US 2021/0374655 A1
(43) Pub. Date: Dec. 2, 2021

(54) NETWORK SYSTEM INCLUDING DRONES

(71) Applicant: **Joby Elevate, Inc.**, Santa Cruz, CA (US)

(72) Inventors: **Matthew Sweeney**, San Francisco, CA (US); **Nikhil Goel**, San Francisco, CA (US); **Mark Moore**, San Francisco, CA (US); **Jeffrey A. Holden**, San Francisco, CA (US)

(21) Appl. No.: **17/354,460**

(22) Filed: **Jun. 22, 2021**

Related U.S. Application Data

(63) Continuation of application No. 15/952,815, filed on Apr. 13, 2018, now Pat. No. 11,074,540.

(60) Provisional application No. 62/570,232, filed on Oct. 10, 2017.

Publication Classification

(51) **Int. Cl.**
G06Q 10/08 (2006.01)
B64C 39/02 (2006.01)

(52) **U.S. Cl.**
CPC ***G06Q 10/083*** (2013.01); ***B64C 39/024*** (2013.01); *B64C 2201/208* (2013.01); *B64C 2201/128* (2013.01); *B64C 2201/024* (2013.01)

(57) **ABSTRACT**

A network system provides delivery of items using unmanned aerial vehicles (UAV) or drones. The network system uses an infrastructure of nodes that include landing pads to dock drones, as well as interfaces to provide and receive items from docked drones. Nodes may be stationary (e.g., fixed at a building rooftop or public transit station) or mobile (e.g., mounted to a vehicle). The network system may determine a route for delivery of an item, where a drone transports the item for at least a portion of the route. For example, the route may include multiple waypoints associated with nodes between which drones travel. For other portions of the route, the network system may request a provider to transport the item using a ground-based vehicle.

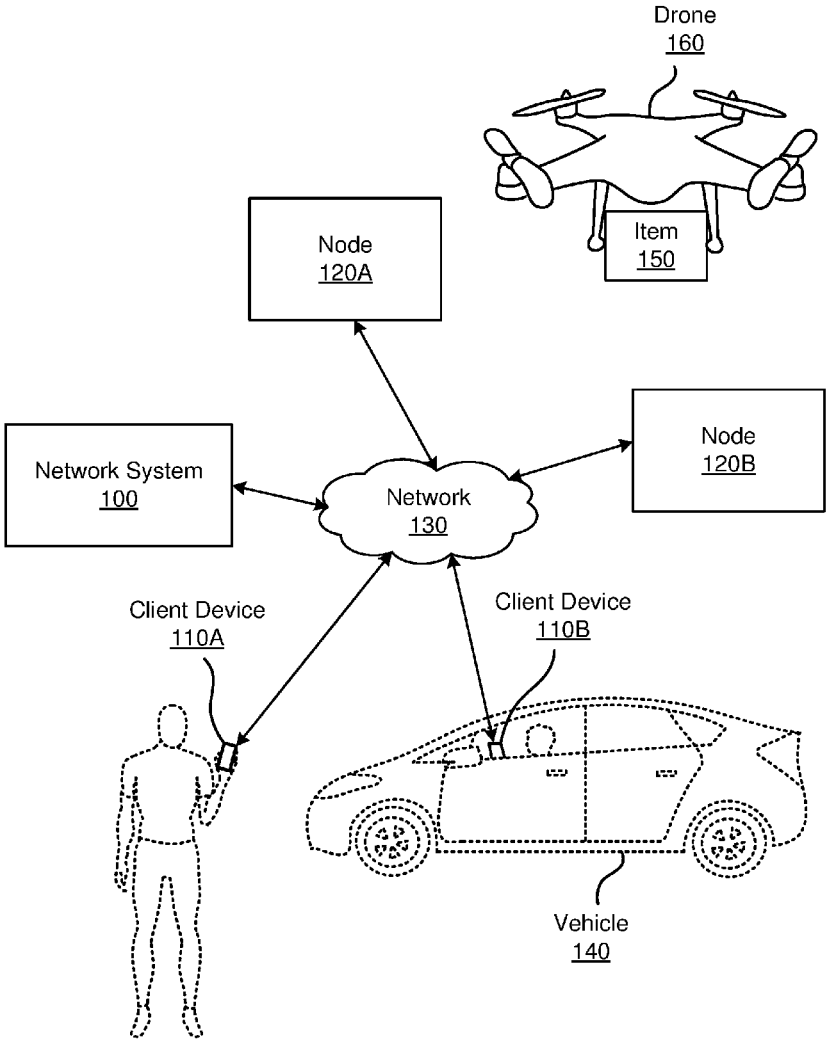

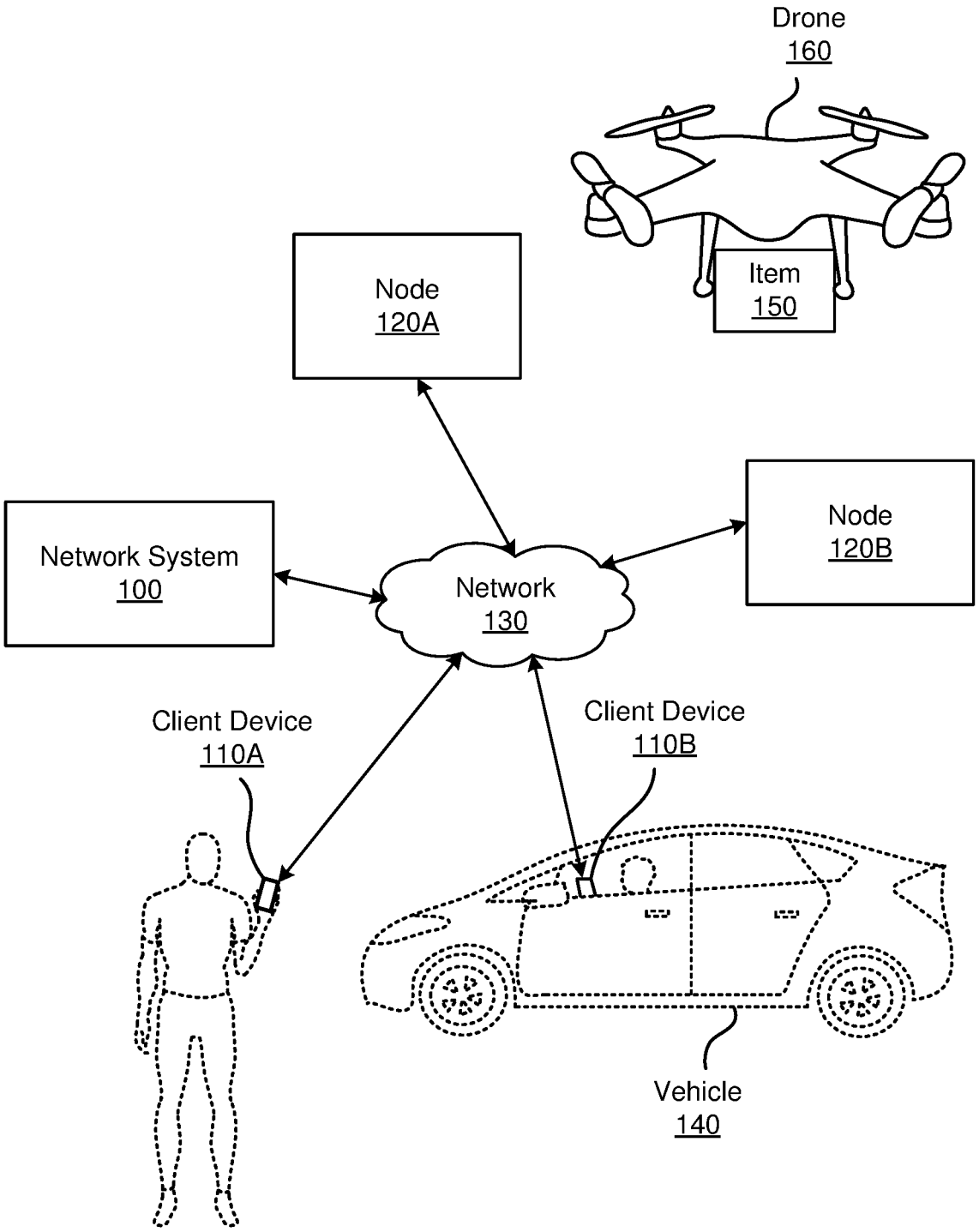
Drone
160
Item
150
Node
120A
Network System
100
Network
130
Node
120B
Client Device
110A
Client Device
110B
Vehicle
140

FIG. 1

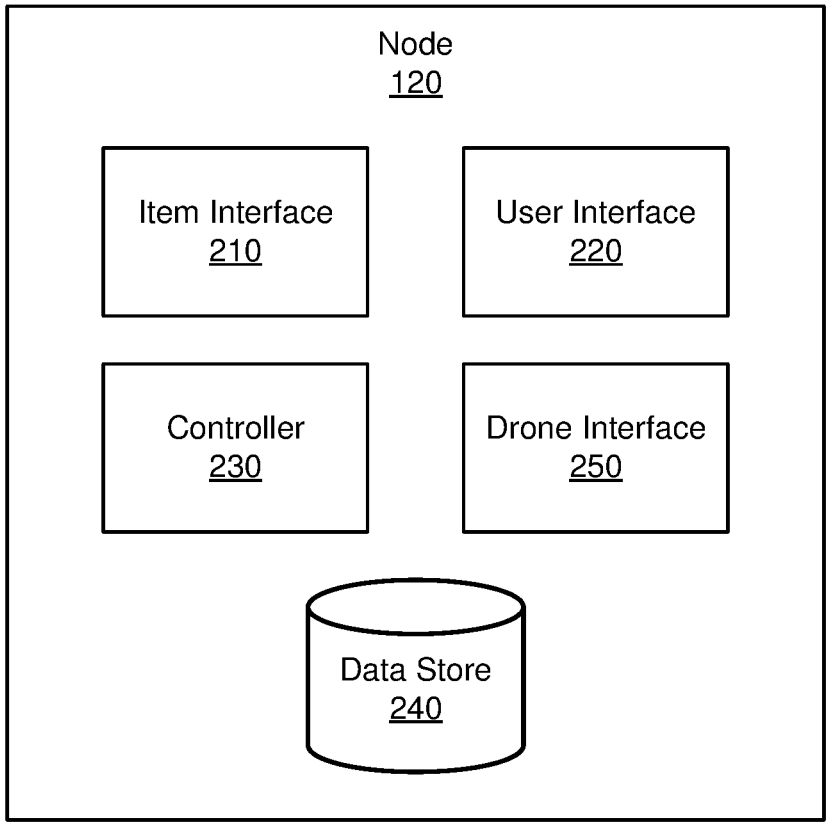
Node
120
Item Interface
210
User Interface
220
Controller
230
Drone Interface
250
Data Store
240

FIG. 2A

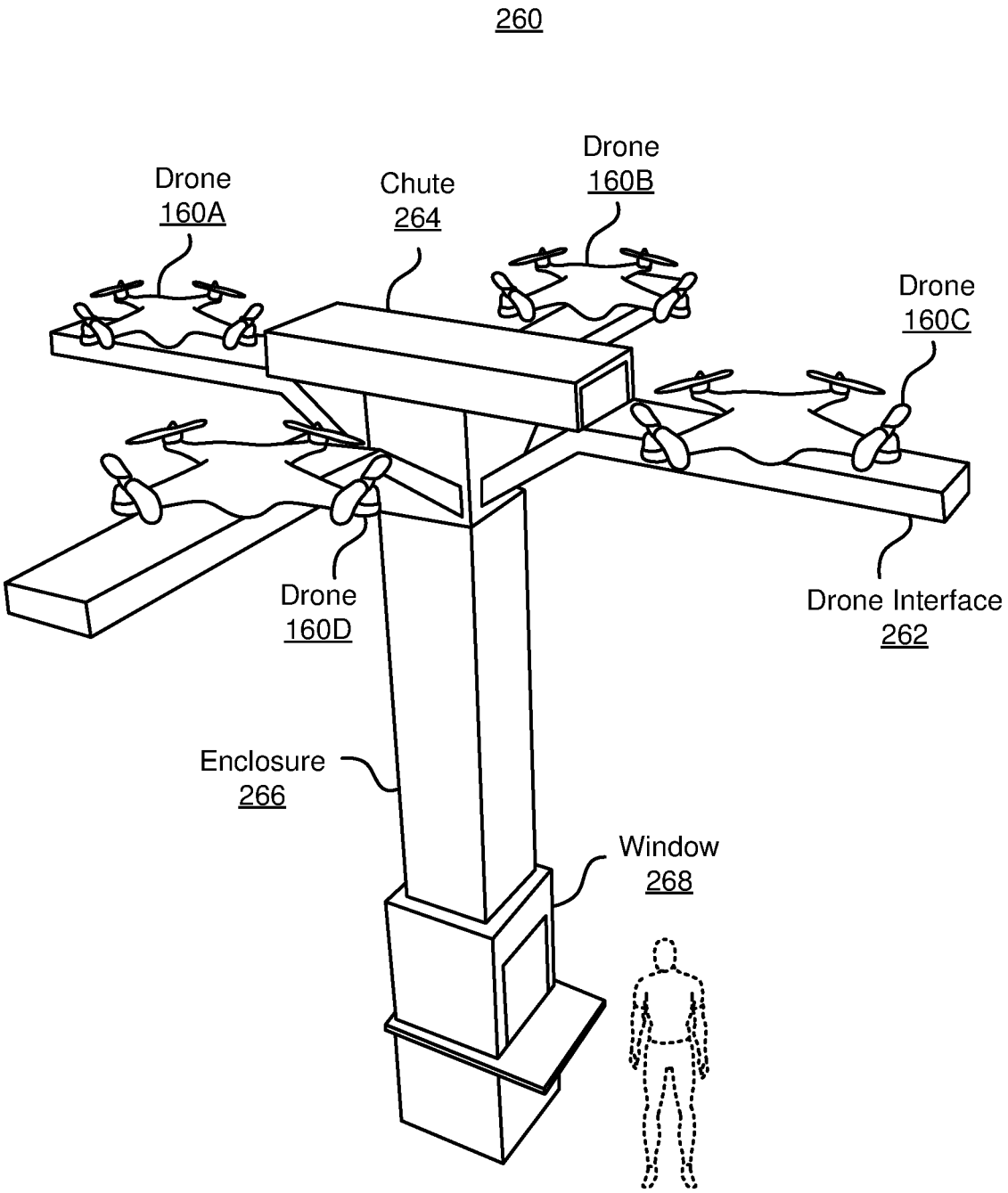
260
Drone
160A
Chute
264
Drone
160B
Drone
160C
Drone
160D
Drone Interface
262
Enclosure
266
Window
268

FIG. 2B

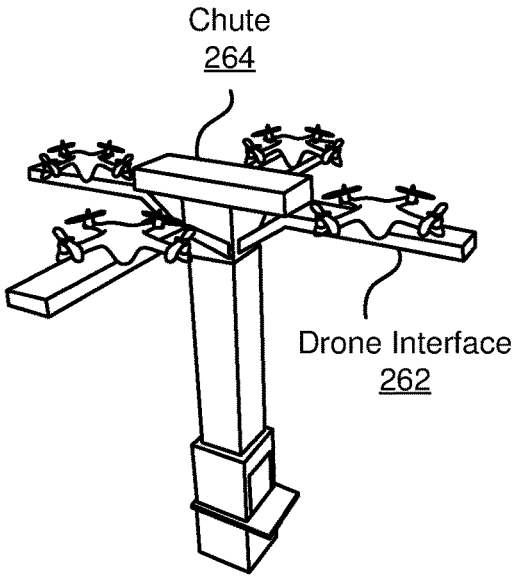

FIG. 2C

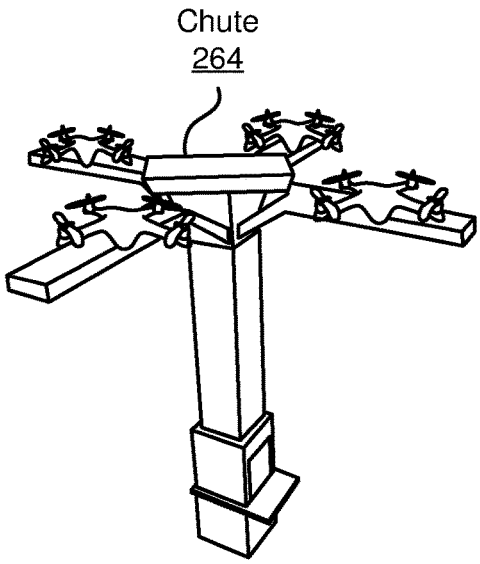

FIG. 2D

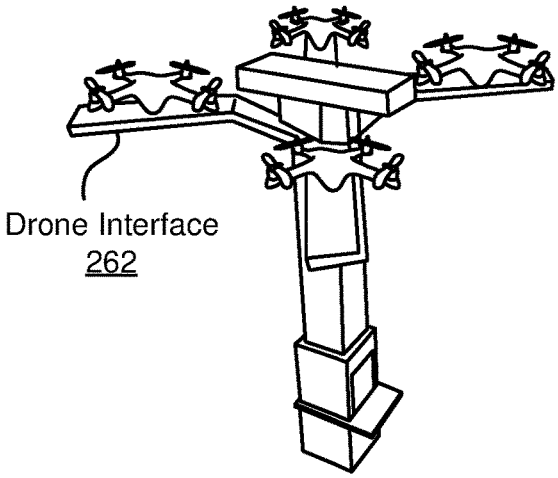

FIG. 2E

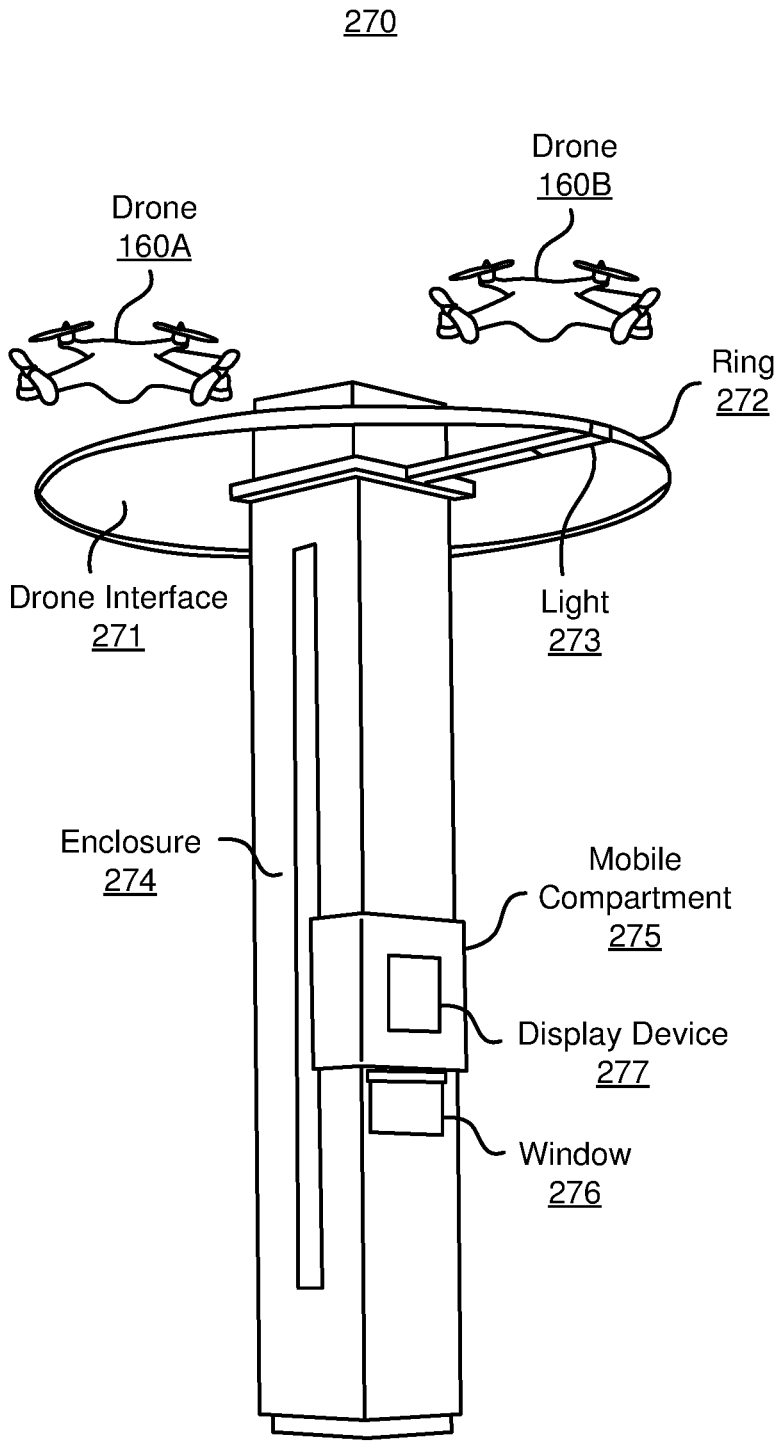
270
Drone
160B
Drone
160A
Ring
272
Drone Interface
271
Light
273
Enclosure
274
Mobile
Compartment
275
Display Device
277
Window
276

FIG. 2F

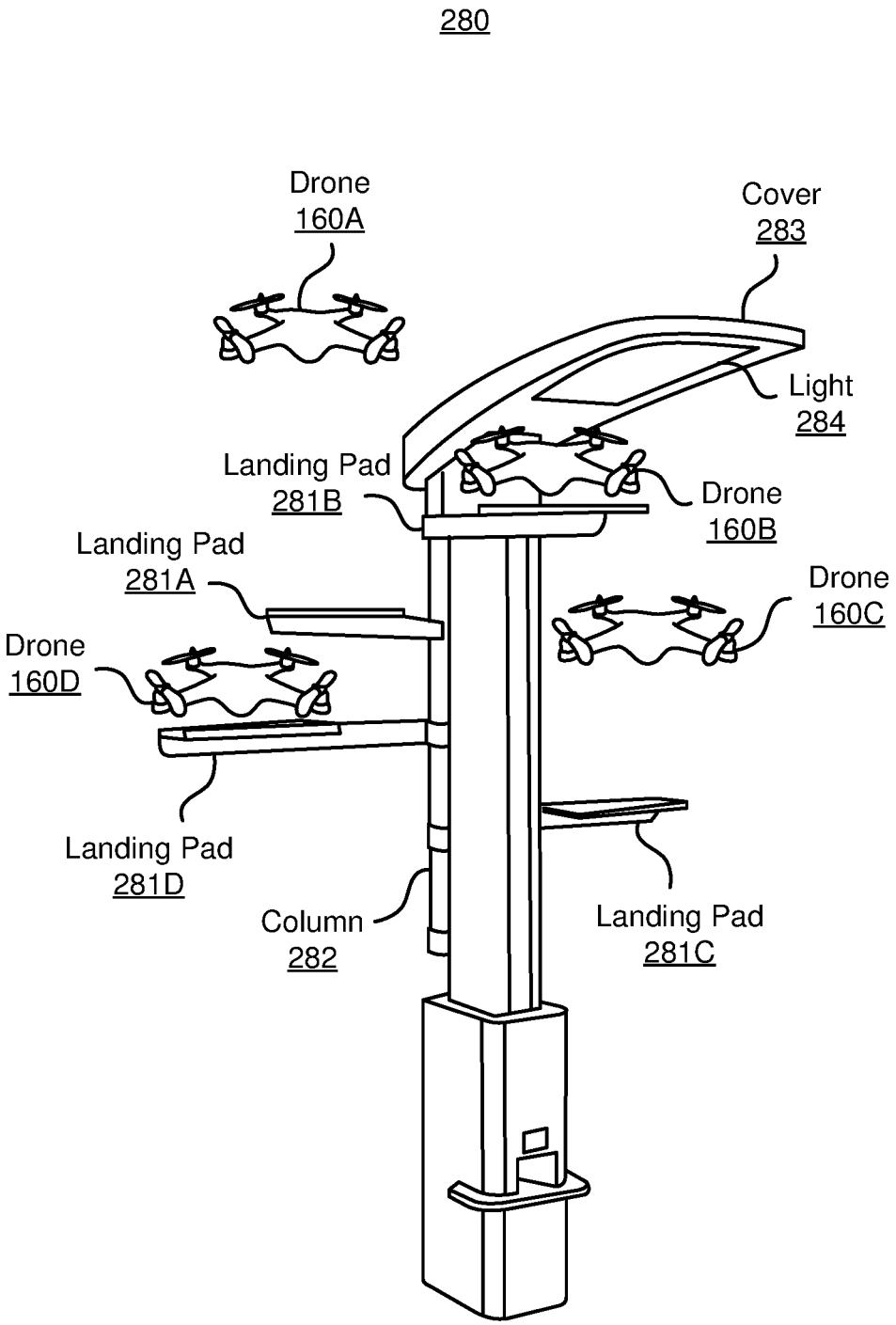
280
Drone
160A
Cover
283
Light
284
Landing Pad
281B
Drone
160B
Landing Pad
281A
Drone
160C
Drone
160D
Landing Pad
281D
Column
282
Landing Pad
281C

FIG. 2G

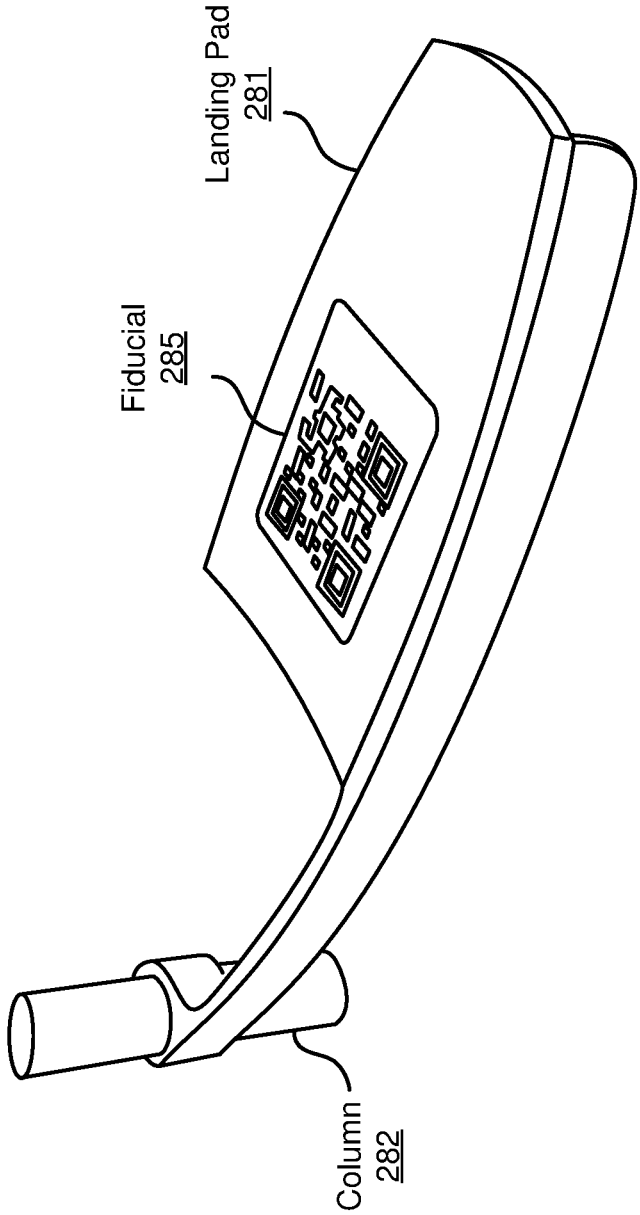

FIG. 2H

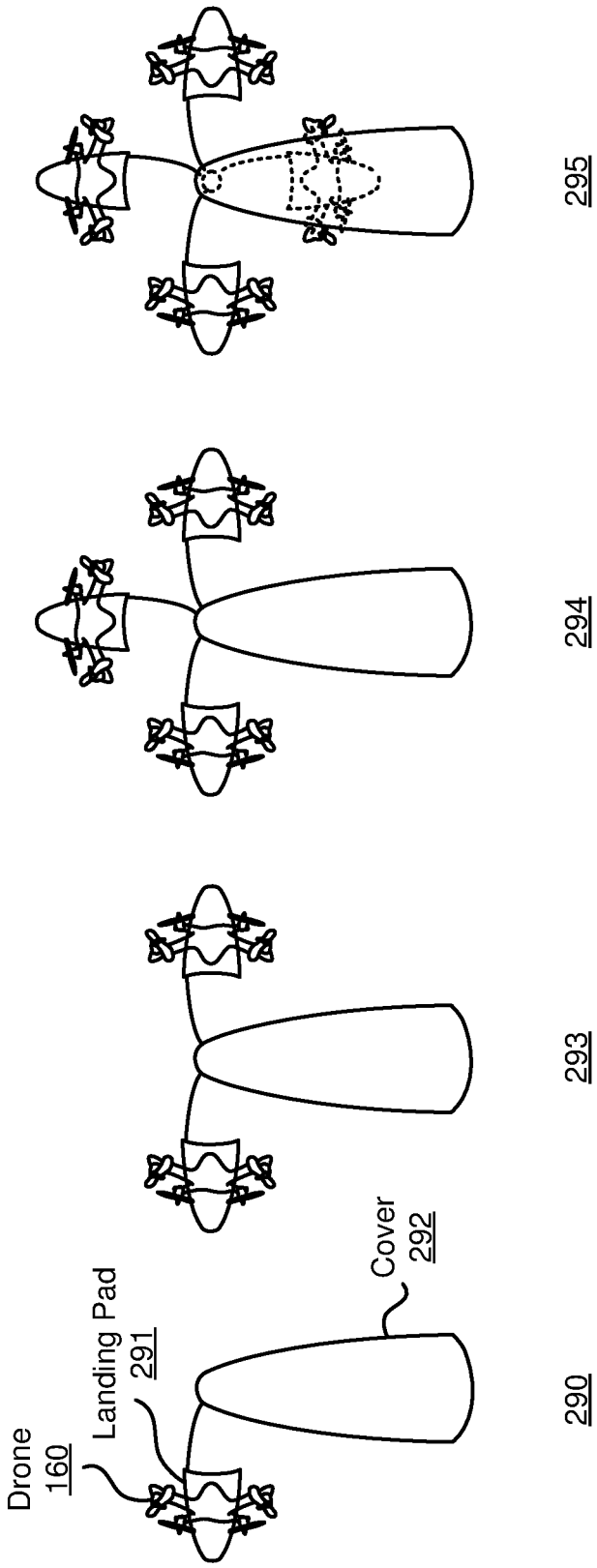

FIG. 2I

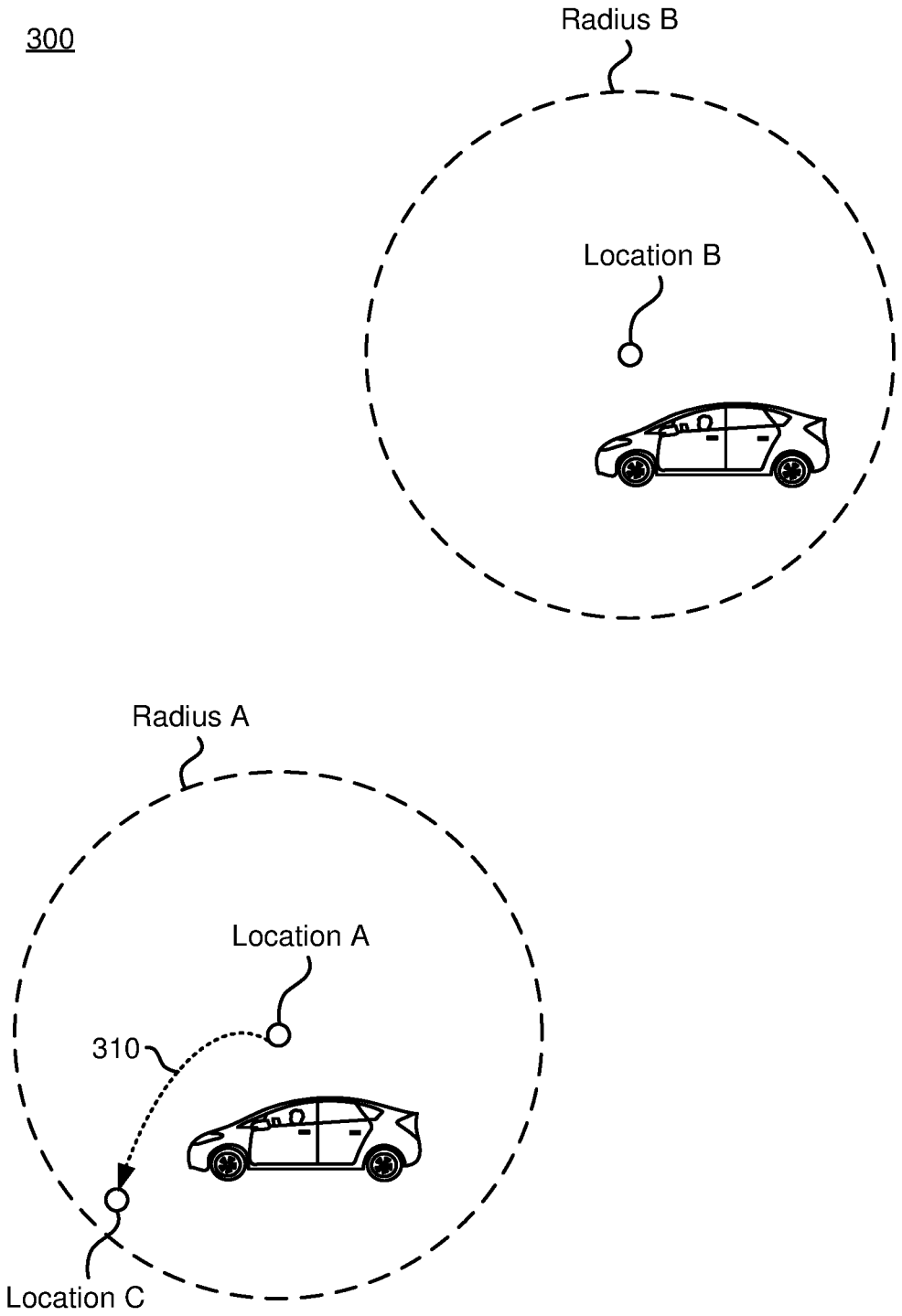

FIG. 3

(Prior Art)

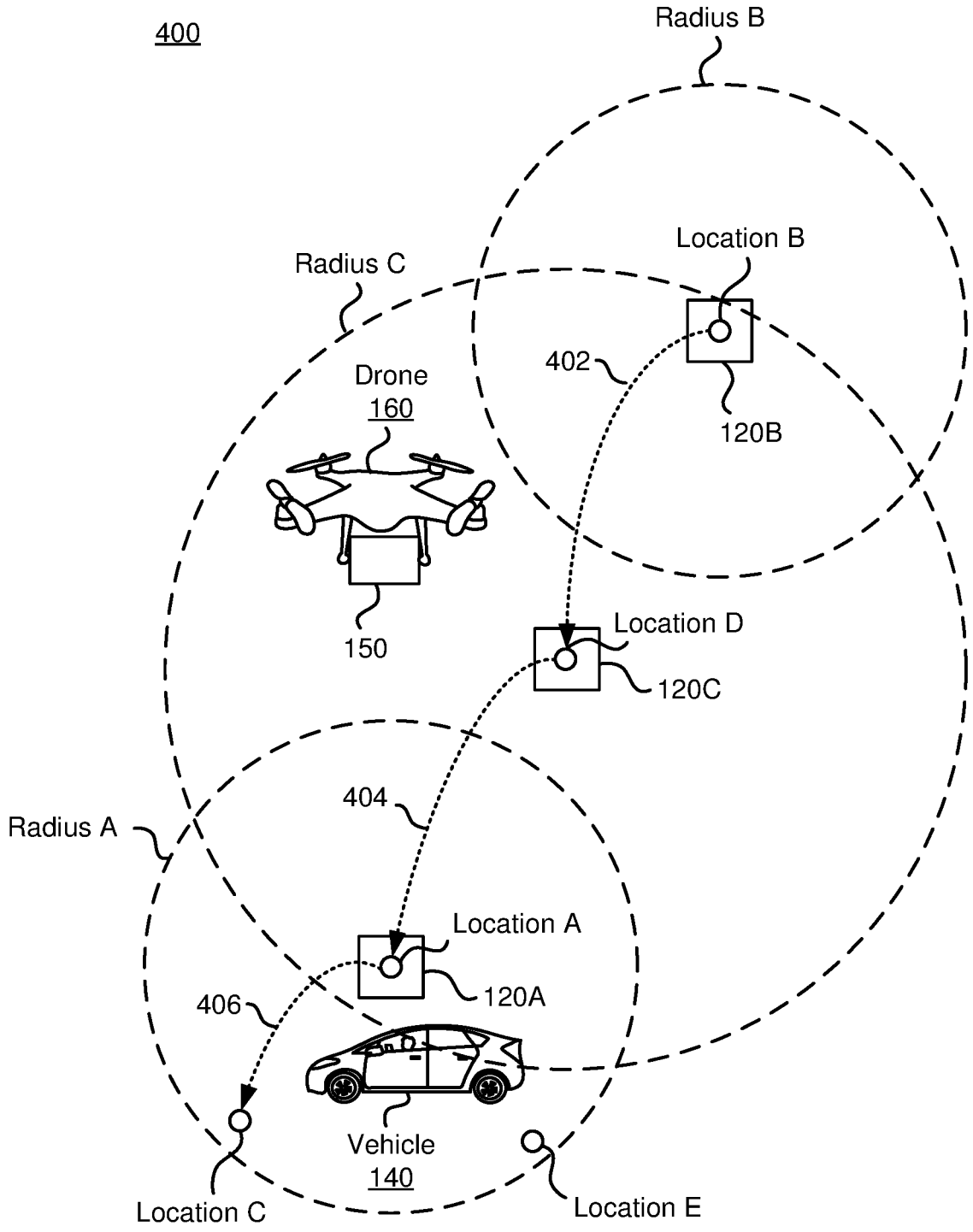
400
Radius B
Location B
Radius C
402
Drone
160
120B
150
Location D
120C
404
Radius A
Location A
120A
406
Vehicle
140
Location C
Location E

FIG. 4A

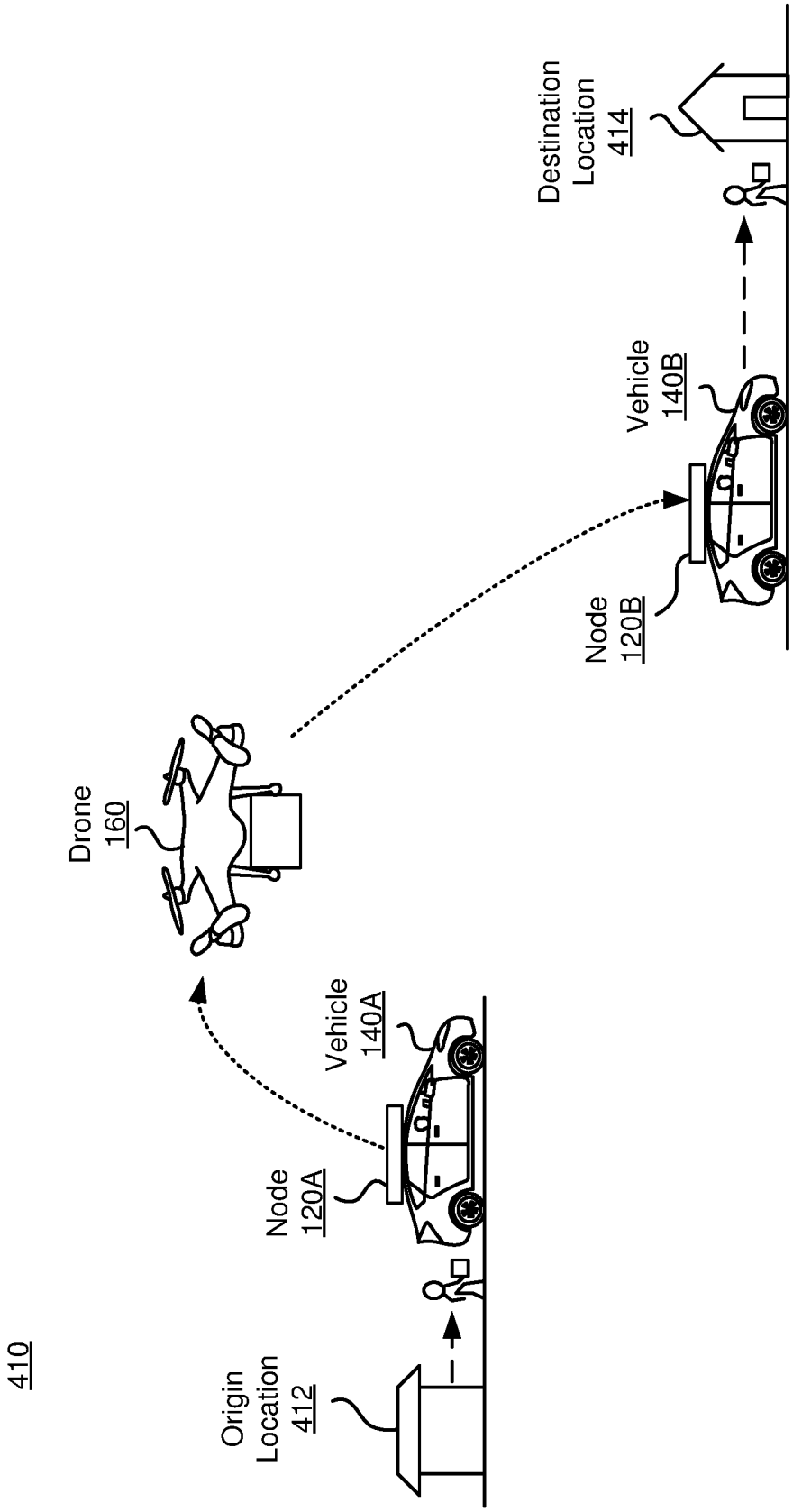
410
Origin Location 412
Node 120A
Vehicle 140A
Drone 160
Node 120B
Vehicle 140B
Destination Location 414

FIG. 4B

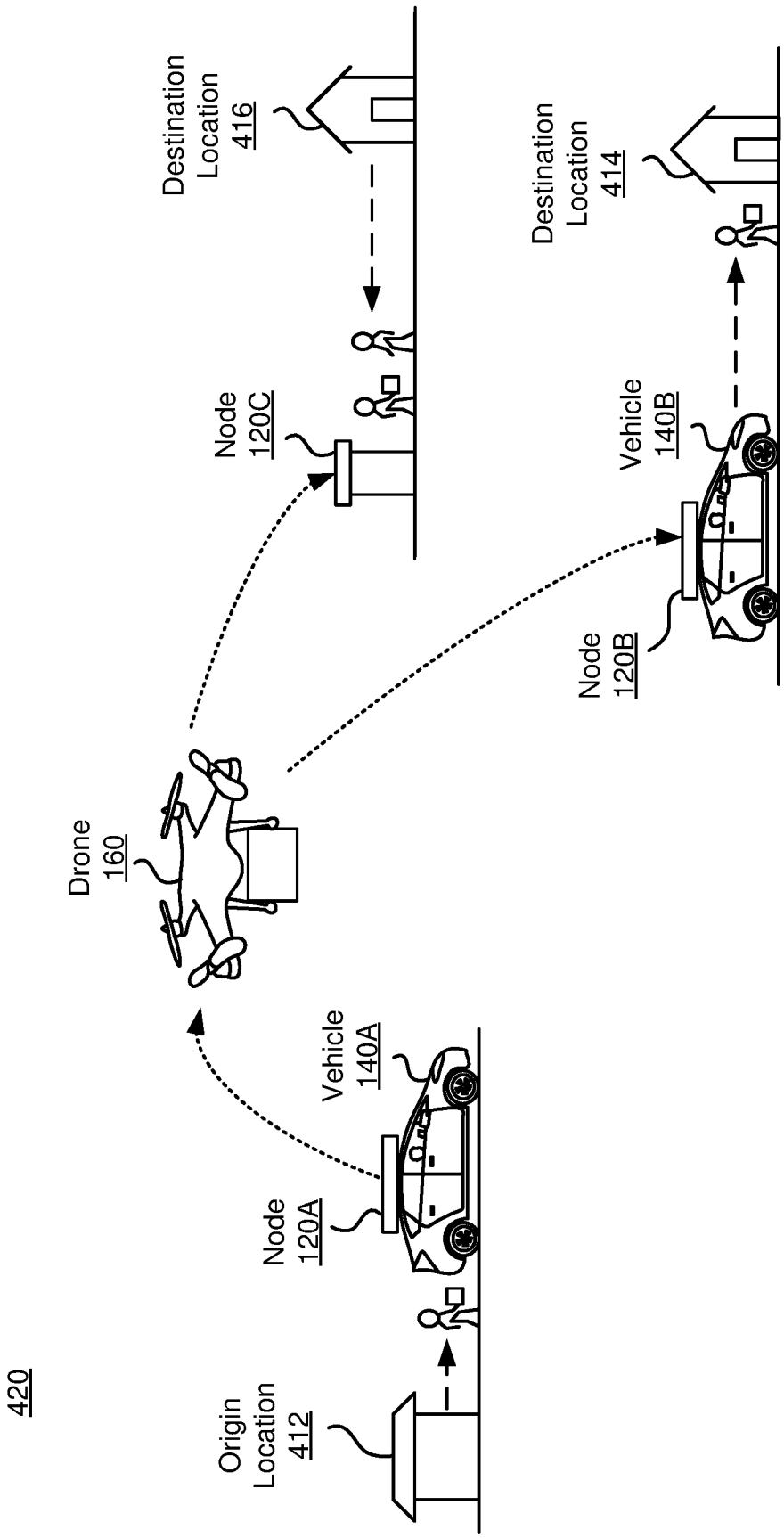
420
Origin Location 412
Node 120A
Vehicle 140A
Drone 160
Node 120C
Destination Location 416
Node 120B
Vehicle 140B
Destination Location 414

FIG. 4C

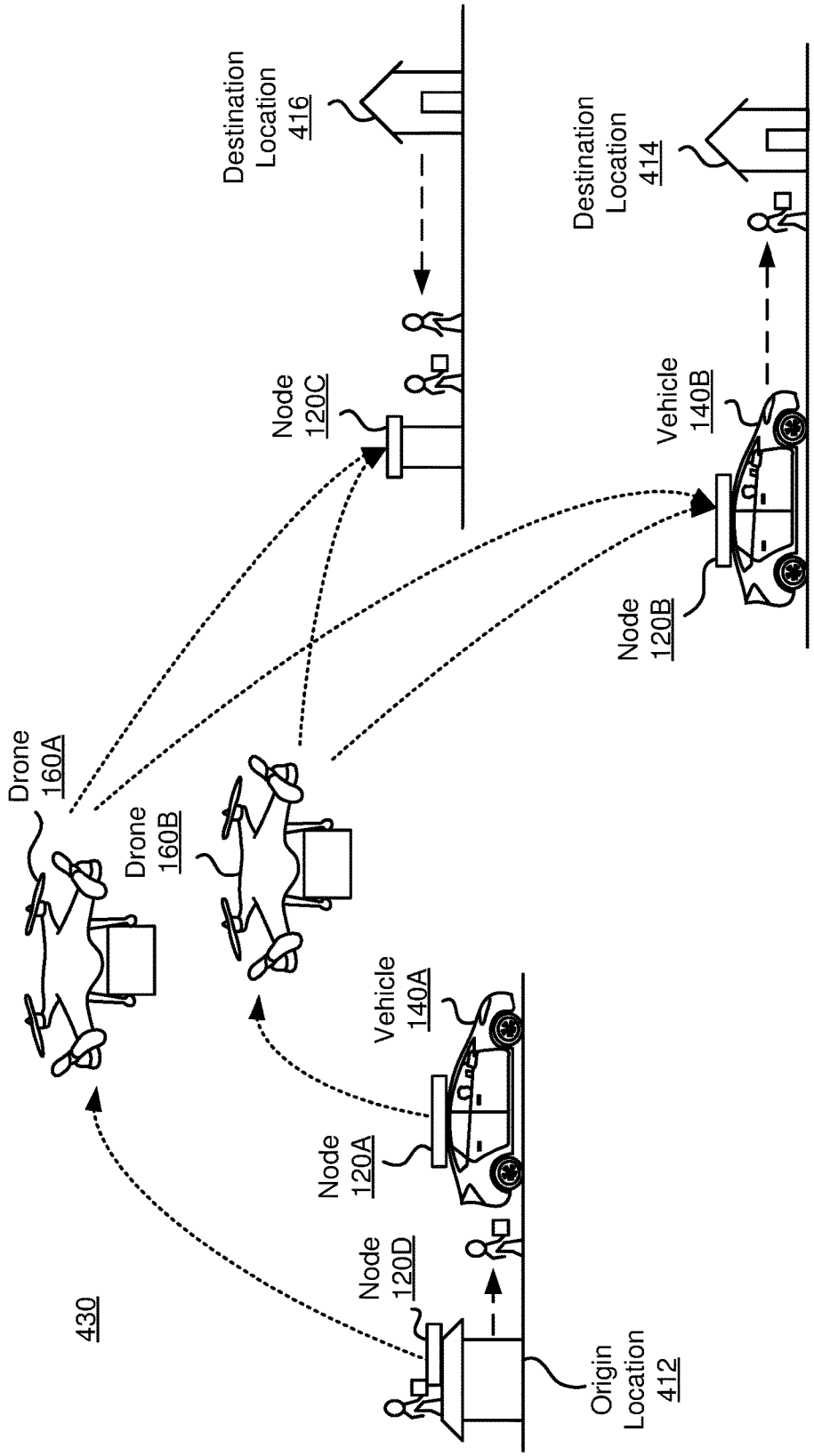
Destination Location 416
Destination Location 414
Node 120C
Vehicle 140B
Node 120B
Drone 160A
Drone 160B
Vehicle 140A
Node 120A
Node 120D
430
Origin Location 412

FIG. 4D

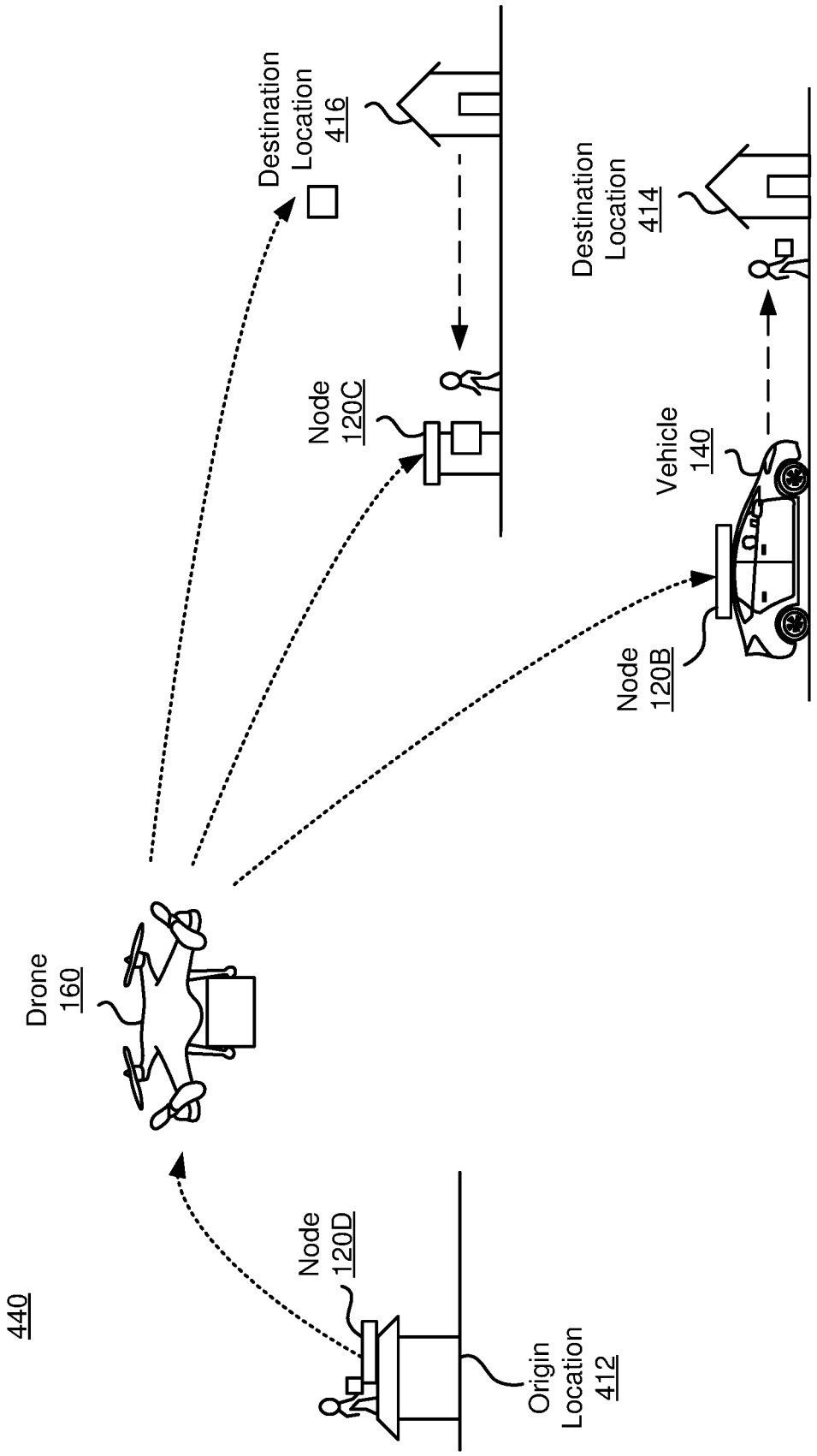
440
Drone
160
Node
120D
Origin
Location
412
Node
120C
Destination
Location
416
Node
120B
Vehicle
140
Destination
Location
414

FIG. 4E

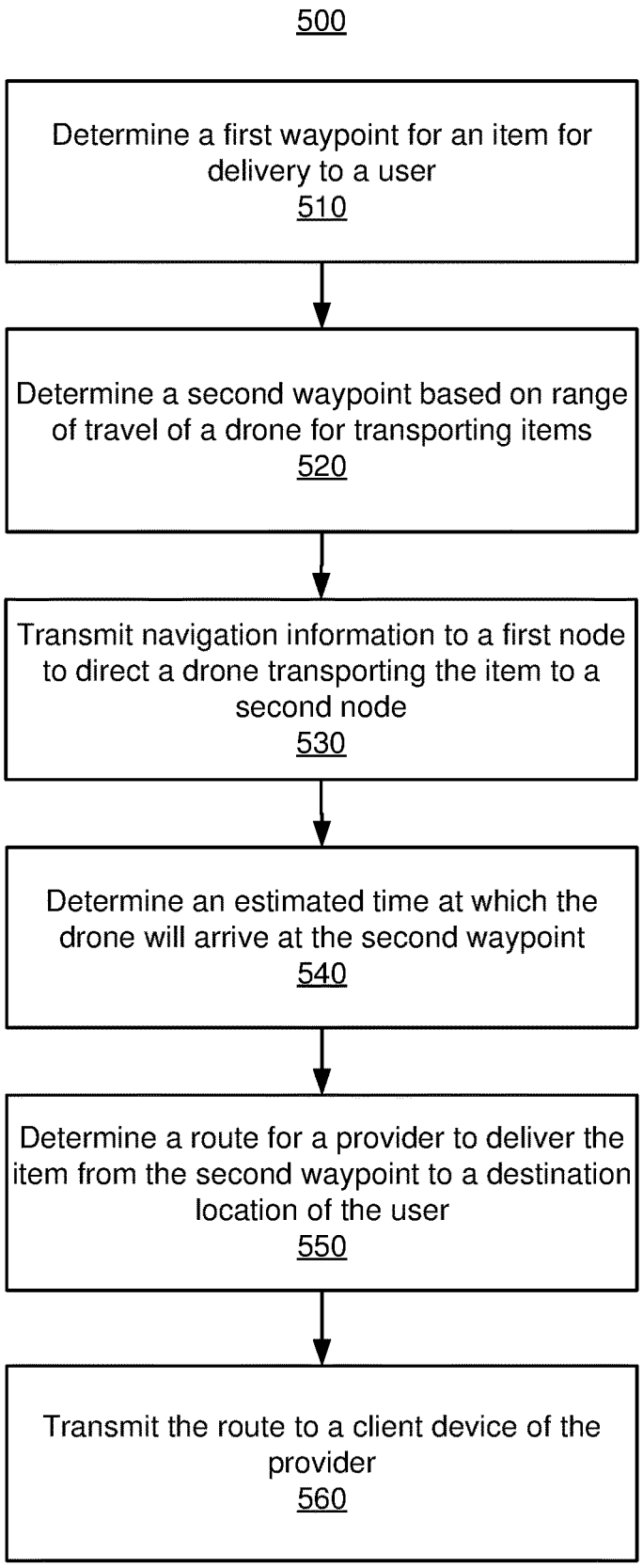
500
Determine a first waypoint for an item for delivery to a user
510
Determine a second waypoint based on range of travel of a drone for transporting items
520
Transmit navigation information to a first node to direct a drone transporting the item to a second node
530
Determine an estimated time at which the drone will arrive at the second waypoint
540
Determine a route for a provider to deliver the item from the second waypoint to a destination location of the user
550
Transmit the route to a client device of the provider
560

FIG. 5A

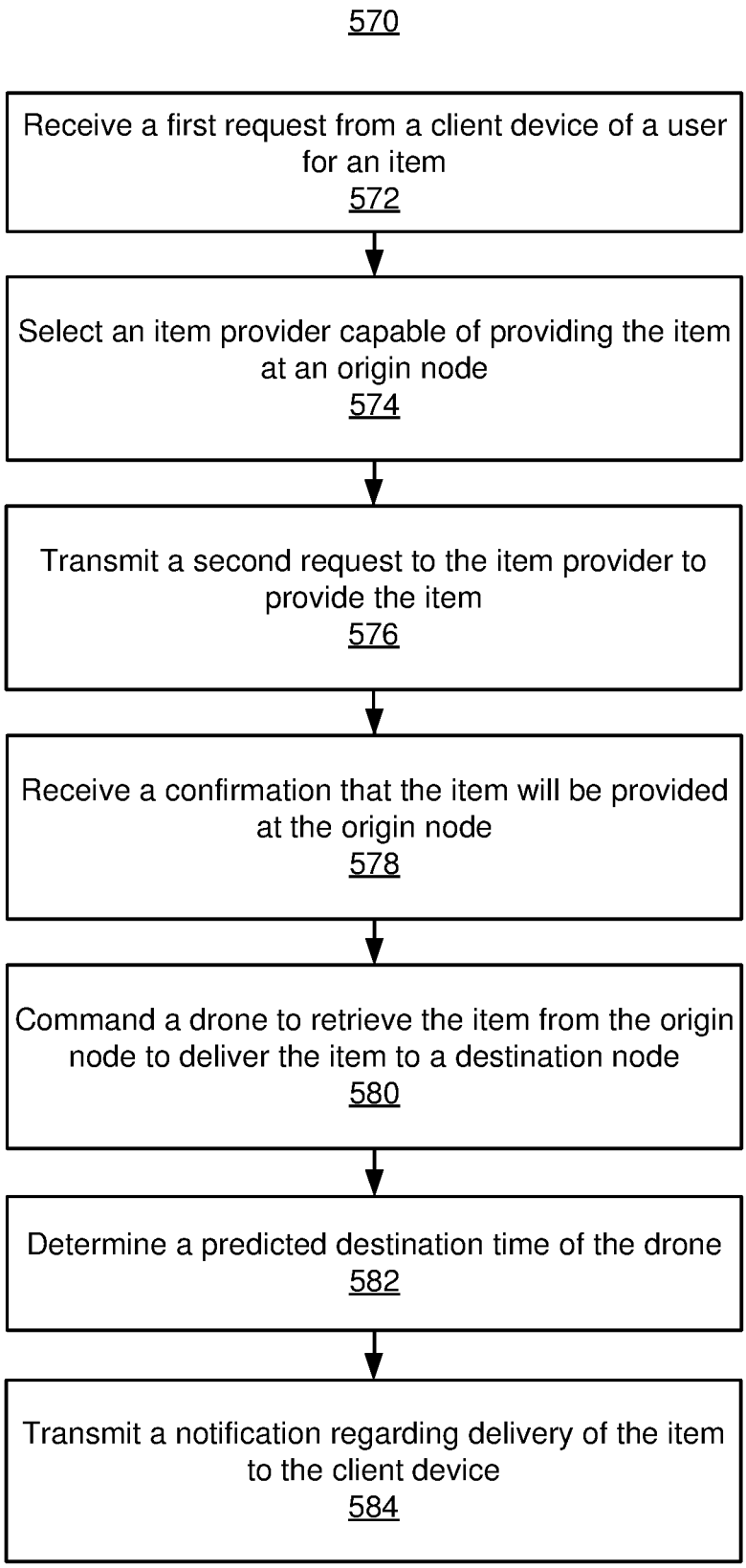
570
Receive a first request from a client device of a user for an item
572
Select an item provider capable of providing the item at an origin node
574
Transmit a second request to the item provider to provide the item
576
Receive a confirmation that the item will be provided at the origin node
578
Command a drone to retrieve the item from the origin node to deliver the item to a destination node
580
Determine a predicted destination time of the drone
582
Transmit a notification regarding delivery of the item to the client device
584

FIG. 5B

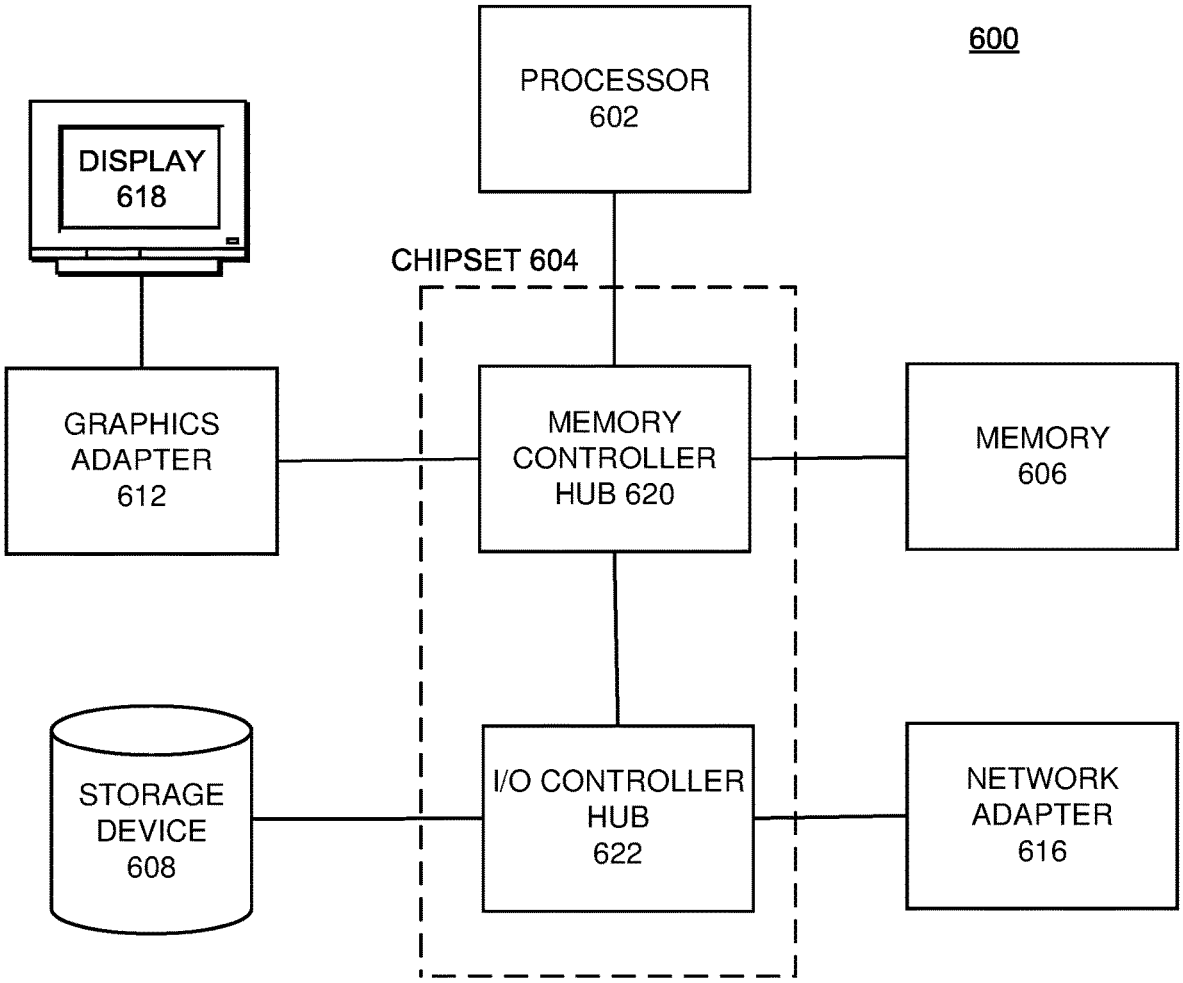
600
PROCESSOR
602
DISPLAY
618
CHIPSET 604
GRAPHICS
ADAPTER
612
MEMORY
CONTROLLER
HUB 620
MEMORY
606
STORAGE
DEVICE
608
I/O CONTROLLER
HUB
622
NETWORK
ADAPTER
616

FIG. 6

NETWORK SYSTEM INCLUDING DRONES

CROSS-REFERENCE TO RELATED APPLICATION

[0001] This application claims priority under 35 U.S.C. § 119(e) to U.S. Provisional Patent Application No. 62/570,232 filed on Oct. 10, 2017, which is incorporated by reference herein in its entirety.

BACKGROUND

Field

[0002] This disclosure generally relates to a network system including drones, and to delivery of items using drones.

Description of the Relayed Art

[0003] Conventional delivery systems provide delivery of items using ground-based vehicles such as cars and trucks. For example, system users may order food from a restaurant, and personnel of the restaurant drive vehicles to transport the food from the restaurant to the users. However, the proximity between restaurants and a user may limit the selection of restaurants from which the user can order food for delivery. Additionally, deliveries may be delayed if a user orders from a restaurant that is located farther away from the user, if there is traffic from vehicles on the road, or due to other factors such as geographical obstacles.

SUMMARY

[0004] A network system provides delivery of items using unmanned aerial vehicles (UAV), referred to herein as "drones." The network system uses an infrastructure of nodes that include landing pads to dock drones, as well as interfaces to provide and receive items from docked drones. Nodes may be stationary (e.g., fixed at a building rooftop or public transit station) or mobile (e.g., mounted to a vehicle). For example, a node is integrated with a building of a restaurant that provides food items to users. Nodes may include a fiducial for determining a landing zone of drones. Furthermore, nodes may include mechanisms to launch drones or to charge or swap batteries of drones. The network system may determine a route for delivery of an item, where a drone transports the item for at least a portion of the route. For example, the route may include multiple waypoints associated with nodes between which drones travel. For other portions of the route, the network system may request a provider to transport the item using a ground-based vehicle. To increase efficiency of deliveries, the network system may aggregate multiple orders such that a drone transports items from the orders between common nodes or overlapping segments of routes, especially in busy urban areas.

BRIEF DESCRIPTION OF DRAWINGS

[0005] FIG. **1** is a diagram of a system environment for a network system according to an embodiment.

[0006] FIG. **2**A is block diagram of a node of the network system according to an embodiment.

[0007] FIG. **2**B illustrates a node according to an embodiment.

[0008] FIGS. **2**C, **2**D, and **2**E illustrate configurations of a node according to various embodiments.

[0009] FIG. **2**F illustrates another node according to an embodiment.

[0010] FIG. **2**G illustrates a node with landing pads according to an embodiment.

[0011] FIG. **2**H illustrates a landing pad with a fiducial according to an embodiment.

[0012] FIG. **2**I illustrates configurations of landing pads of a node according to various embodiments.

[0013] FIG. **3** is a diagram illustrating conventional delivery of items using vehicles.

[0014] FIG. **4**A is a diagram illustrating delivery of items using drones and vehicles according to an embodiment.

[0015] FIG. **4**B is a diagram illustrating delivery of items between mobile nodes according to an embodiment.

[0016] FIG. **4**C is a diagram illustrating delivery of items between mobile nodes and stationary nodes according to an embodiment.

[0017] FIG. **4**D is another diagram illustrating delivery of items between mobile nodes and stationary nodes according to an embodiment.

[0018] FIG. **4**E is yet another diagram illustrating delivery of items between mobile nodes and stationary nodes according to an embodiment.

[0019] FIG. **5**A is a flowchart illustrating a process for providing delivery using a drone according to an embodiment.

[0020] FIG. **5**B is a flowchart illustrating another process for providing delivery using a drone according to an embodiment.

[0021] FIG. **6** is a high-level block diagram illustrating physical components of a computer used as part or all of the components from FIG. **1**, according to one embodiment.

[0022] The figures depict embodiments of the present invention for purposes of illustration only. One skilled in the art will readily recognize from the following discussion that alternative embodiments of the structures and methods illustrated herein may be employed without departing from the principles of the invention described herein.

DETAILED DESCRIPTION

System Overview

[0023] FIG. **1** is a diagram of a system environment for a network system **100** according to one embodiment. Users of the network system **100** include providers that provide service to other users. In an example use case, a provider operates a vehicle **140** to transport an item **150** from a first location (e.g., an "origin location") to a second location (e.g., a "destination location"). The network system **100** may determine origin locations and coordinate providers to pick up items at the origin locations. Types of items **150** include but are not limited to mail, packages, consumable items, raw goods, etc., and may be available from one or more third parties or "item providers." In some embodiments, a provider may pick up items **150** from one or more nodes **120**. Additionally, an unmanned aerial vehicle (UAV) **160**, also known as a drone **160**, may transport items **150** between different nodes **120**. For instance, as shown in FIG. **1**, the drone **160** may transport the item **150** from node **120**A to node **120**B, where the provider picks up the item **150** for delivery to a user. Nodes **120** may be stationary (e.g., a building or fixed structure such as a streetlight or bus stop) or mobile (e.g., mounted on a vehicle or otherwise transportable) and located at waypoints of routes for delivery of

items. Nodes **120** may be the vehicle **140** itself or any form of suitable mobile transport for the item to be delivered. For purposes of explanation, we describe use cases where the items are consumable items and the nodes may be located at or nearby restaurants (or relevant locations of item providers such as a warehouse storing food or drink supplies) or mounted to (or part of) a ground-based vehicle. However, the embodiments described herein may be adapted to other applications. In addition, though UAV type drones **160** are described for purposes of explanation, the embodiments described herein may be adapted to rolling drones **160** other types of mobile systems. A rolling drone **160** or "sidewalk robot" may include wheels for navigating on sidewalks, roads, or other ground surfaces at pedestrian-like speeds, e.g., to avoid safety incidents.

[0024] The system environment includes the network system **100**, one or more client devices **110** of users of the network system **100**, one or more nodes **120**, and one or more drones **160**. In the embodiment of FIG. **1**, a user uses client device **110**A and a provider uses client device **110**B to interact with the network system **100**. The network system **100** and client devices **110** may be connected to each other via a network **130**. In some embodiments, one or more drones **160** or nodes **120** are connected to the network system **100** via the network **130**. In other embodiments, a drone **160** or node **120** may not necessarily be connected to the network system **100** though may receive information from (or provide information to) the network system **100** via another component of the system environment, e.g., a client device **110** or another node **120**. In other embodiments, different or additional entities can be included in the system environment. The functions performed by the various entities of FIG. **1** may vary in different embodiments.

[0025] A user can interact with the network system **100** through the client device **110**, for example, to request service (e.g., receiving delivery of an item) or to receive requests to provide service (e.g., delivering an item). A client device **110** can be a personal or mobile computing device, such as a smartphone, a tablet, or a notebook computer. In some embodiments, the client device **110** executes a client application that uses an application programming interface (API) to communicate with the network system **100** through the network **130**. The client application of the client device **110** can present information received from the network system **100** on a user interface, such as a delivery route on geographic map, current location of the client device **110** or an item **150** for delivery, notifications about a delivery, etc. In some embodiments, the client application running on the client device **110** can determine a current location using one or more sensors of the client device **110**, such as a global positioning system (GPS) receiver, and provide the current location of the client device **110** to the network system **100**.

[0026] The network system **100** may include a map database storing map information of geographic regions in which the network system **100** offers services such as delivery or transportation for users. The map information may include map properties of a geographical region such as road properties that describe characteristics of the road segments, such as speed limits, road directionality (e.g., one-way or two-way), traffic history, traffic conditions, addresses on the road segment, length of the road segment, and type of the road segment (e.g., surface street, residential, highway, toll). The map information may also include locations and information associated with nodes **120**, waypoints (e.g., at which stationary nodes **120** are located), and other points-of-interest (e.g., restaurants, shopping centers, commercial or residential buildings, warehouses, etc.) in a geographical region. The network system **100** may use the map database along with locations of client devices **110** to determine navigation information (e.g., routes for a drone **160** or vehicle **140**), origin locations, destination locations, or intermediate locations (e.g., en route from an origin and destination location) for delivery of items **150** to users.

[0027] For convenience, we presume here that the vehicle **140** is a car, operated by a driver, as an example provider. However, the embodiments described herein may be adapted for a provider operating alternative vehicles (e.g., bicycle, motorcycle, boat, airplane, helicopter, VTOL, etc.) or vehicles that do not necessarily need to be operated by a person. For instance, the provider may be an autonomous vehicle **140** that receives routing instructions from the network system **100** (or from a local navigation system).

[0028] In some embodiments, a provider can receive invitations or assignment requests through a client device **110**. The network system **100** identifies a user who submitted an assignment request and determines an origin location and/or destination location for the requested service. For example, the network system **100** receives a request for delivery of an item from a client device **110** of a user, selects a provider from a pool of available (or "open") providers to provide the delivery, e.g., based on the vehicle type, the origin location, the destination location, locations of nodes **120**, or item providers. The network system **100** transmits information associated with the assignment request to the selected provider's client device **110**.

[0029] Client devices **110** can communicate with the network system **100** via the network **130**, which may comprise any combination of local area and wide area networks employing wired or wireless communication links. In one embodiment, the network **130** uses standard communications technologies and Internet protocols. For example, the network **130** includes communication links using technologies such as the Internet, 3G, 4G, BLUETOOTH®, or Wi-Fi. In some embodiments, all or some of the communication links of the network **130** may be encrypted.

[0030] A drone **160** is an aerial device that does not have a human operator onboard. The drone **160** may include any number of sensors for data collection, navigation, landing, or other functionality. Additionally, the drone **160** may include one or more motors (e.g., electric motors) for actuating one or more rotors. In some embodiments, each rotor has a corresponding motor, e.g., that may be controlled independently from the other motors. A drone **160** that includes four rotors may be known as a "quadcopter." An onboard battery (e.g., up to 15 pounds in weight), which in one embodiment is rechargeable, provides power for the motors as well as other functionality of the drone **160**. In some embodiments, a drone **160** may be a zero-emission and all-electric device (or low-emission and at least partially electric), which may reduce noise pollution to surrounding areas and communities. For instance, the drone **160** produces noise at 65 dB or less at a height of 15 feet from the ground. The drone **160** may include landing gear to land and launch from a node **120**, e.g., a drone interface or surface such as the ground or a top of a building, vehicle **140**, or another structure. Drones **160** may land and launch from various heights, e.g., approximately five feet or 13 feet, and have a cruise altitude of up to 400 or 1000 feet. In some

embodiments, drones **160** have a fixed wing architecture and a wingspan of up to five or six feet. Drones **160** may switch from a flying configuration to a more compact configuration for stowage. In some embodiments, a drone **160** may travel at speeds between 50-100 miles per hour and have a range of travel (e.g., under a battery charge) of 10-25 miles or more.

[0031] The drone **160** includes an interface for receiving, stowing, and providing one or more items **150**. For example, the interface includes active and/or passive mechanisms that couple to an item **150** and secure the item **150** with the drone **160** during transportation in flight. In addition, the mechanisms may decouple the item **150** from the drone **160** upon landing, e.g., to provide the item **150** to a node **120**, to a provider for pickup, or to a user for delivery. In an embodiment, the mechanism includes an actuated mechanical arm with a grip interface to attach and de-attach the item **150**. The interface may also include a protective cover to shield at least part of the item **150** during transport, thus reducing the likelihood of the item **150** becoming damaged or contaminated. In some embodiments, the interface includes a temperature-controlled unit for maintaining a temperature of the item **150**. For instance, the temperature-controlled unit may keep an item **150** at a target temperature depending on certain types of consumable goods in the item **150** (e.g., warm for soup or cold for ice cream). In some embodiments, a drone **160** may transport a payload having dimensions up to 130 millimeters (mm)×330 mm×195 mm (for width, length, and height), 140 mm×320 mm×168 mm, or 5 inches×13 inches×7.6 inches. Further, the drone **160** may transport a payload, e.g., having a weight up to 4.3-4.5 pounds.

[0032] FIG. **2**A is block diagram of a node **120** of the network system **100** according to an embodiment. A node **120** may include an item interface **210**, user interface **220**, controller **230**, data store **240**, and drone interface **250**. In other embodiments, the node **120** may include additional, fewer, or different components. To maintain a compact size (e.g., for mounting and transportation on a vehicle or integration as part of the vehicle), a mobile node **120** may include fewer components than a stationary node. For instance, a mobile node **120** may not necessarily include a user interface **220**, controller **230**, or data store **240**. The components may include any number of mechanical, hardware, software components, or a combination thereof. In some embodiments, a node **120** may fit in a spot for a vehicle in a parking lot. In other embodiments, a node **120**, or some components of a node **120**, may be integrated as part of a structure or building such as a restaurant, warehouse, delivery center, food truck or top/outer surface of a ground-based vehicle, or transit station. In some embodiments, a node **120** may be a standalone device.

[0033] The item interface **210** receives and provides items **150** to drones **160**, users, or providers of the network system **100**. Items **150** may be included in one or more predetermined types of receptacles, for example, having known dimensions, volume, and/or weight (e.g., weight of the receptacle or a maximum allowable weight of items **150** transported in the receptacle) for compatibility with nodes **120**, drones **160**, and/or vehicles **140**. In some use cases, a receptacle is a rectangular-shaped bin having a known width, length, and height. A receptacle may include a latch to secure items **150** during transportation. Moreover, a receptacle may include identifying information (e.g., a tag, QR code, or other barcode), which may indicate an origin location, destination location, or type of a corresponding item **150**. In some embodiments, the item interface **210** may also receive and provide items **150** not included in a receptacle. Once the item interface **210** receives these items **150**, the item interface **210** may place or sort these items **150** into a receptacle for transportation. The receptacle may include insulation to keep contents of the item **150** hot or cold. The item interface **210** includes storage for received items **150** that are awaiting pickup.

[0034] The item interface **210** may include a window or slot where an item **150** (which may or may not be in a receptacle) may be dropped off (e.g., by a person, robot, vehicle, etc.) for transportation. For example, personnel of a restaurant (e.g., an item provider) provides consumable goods to a node **120** via the item interface **210**. The personnel may be a courier that carries the consumable goods from a kitchen of the restaurant and walks over to the node **120**. The item interface **210** may also include a temperature-controlled unit to keep an item **150** at a target temperature. The temperature-controlled unit may determine a target temperature setting for a certain item **150** based on determining the corresponding identifying information, e.g., by scanning a barcode of the receptacle, or by receiving information about the delivery from the network system **100**. In some embodiments, the temperature-controlled unit of the item interface **210** may provide target temperature information to a temperature-controlled unit of a drone **160**.

[0035] Users or providers of the network system **100** may also pick up items **150** from the item interface **210**. The item interface **210** may include one or more security devices to determine whether an intended recipient (e.g., a user, item provider, or provider) is trying to pick up an item **150**. For example, the item interface **210** releases an item **150** (e.g., by unlocking a holding area) responsive to receiving valid credentials. The intended recipient may input credentials (e.g., a username, password, or biometrics) via the user interface **220**, which is further described below. In some embodiments, the item interface **210** may include a sensor configured to detect short-range transmissions, e.g., BLUETOOTH® or near-field communication (NFC), of a client device **110**. Based on the detected transmissions, the item interface **210** can determine whether the client device **110** is associated with the intended recipient, and thus make the item **150** available for pickup.

[0036] The user interface **220** presents information about items **150** to users or providers of the network system **100**. The user interface **220** may include a display device, audio device, or other types of devices to present the information. Additionally, the user interface **220** may include any number of user input devices (e.g., a touchscreen, keyboard, buttons, etc.) to receive user input such as credentials to pick up an item **150** from the node **120**, or drop off an item **150** at the node **120**. The presented information may indicate items **150** currently stored at the node **120**, items **150** scheduled by the network systems **100** for delivery to the node **120**, or a history of items **150** delivered or picked up from the node **120**. Further, the presented information may describe an item **150**, e.g., an origin location, destination location, delivery route, or contents of the item **150**.

[0037] In some embodiments, the controller **230** enables communication between the node **120** and the network system **100** or client devices **110** via the network **130**. The controller **230** may receive information for services (or user

information) from the network system **100** or client devices **110**. The information may be stored in the data store **240** and retrieve from the data store **240** by various components of the nodes **120**. In some embodiments, the data store **240** may also include a local map database, which is substantially the same as, or a subset of, the map database of the network system **100** as previously described with respect to FIG. **1**. Thus, the node **120** may not necessarily need to communicate with the network system **100** to receive map information in real-time. In an example use case, the information includes navigation information for delivery of an item **150**. The navigation information may indicate a determined trajectory (e.g., including a bearing and distance) for a drone **160** to transport the item **150** from the node **120** to a destination location, or to another intermediate location as part of a route to the destination location. Based on the navigation information and/or map information, the controller **230** may determine and provide instructions to the drone interface **250** to launch the drone **160** transporting the item **150**.

[0038] The drone interface **250** enables one or more drones **160** to land and launch from the node **120**. In particular, the drone interface **250** may include a landing pad for docking a drone **160** transporting one or more items **150** (or not transporting any items **150** yet). The drone interface **250** may include one or more fiducials, for example, visual markers or alignment devices (e.g., on the landing pad), for determining a landing location or assisting with landing a drone **160** to a docked position. A fiducial may be an approved code (e.g., bar code or QR code), or image. Additionally, a fiducial may be mobile, for instance, printed on a piece of paper or other suitable material. In some use cases, the fiducial is waterproof, water-resistant, or otherwise protected, e.g., to reduce wear and tear. A fiducial may also be printed on a node **120**, for example, on a surface of a vehicle **140**, another structure, or the ground. A courier (e.g., provider or item provider) may relocate (e.g., by foot or bike) a fiducial to a selected landing zone at a waypoint or may re-use the fiducial for different deliveries or nodes **120**. In some embodiments, drones **160** may use other types of interfaces different from fiducials for determining landing locations or nodes **120**. For example, a drone **160** may use Bluetooth Low Energy (BLE), radio-frequency identification (RFID), WIFI, or other types of transmission (e.g., non-visible to humans) to receive or transmit communication to a client device **110**, for instance, that is located inside a vehicle **140** coupled with a node **120**.

[0039] In some embodiments, the landing pad is coupled to the item interface **210** for receiving items **150** delivered by drones **160** (e.g., once landed or docked), and for providing other items **150** from the node **120** to the drones **160** for delivery to other locations. The landing pad may include a charger to charge a battery of the drone **160**, or a mechanism to swap a battery of the drone **160**. For example, responsive to determining that a battery of the drone **160** has a charge less than a threshold level, the drone interface **250** determines to charge the battery or to swap the battery with another battery having at least the threshold level of charge. The charger may include a charging port that physically couples to the drone **160**, or may wirelessly charge the drone **160**, e.g., using inductive or resonance charging. Further, the drone interface **250** may include a hanger for stowing of docked drones **160** that have not yet launched.

[0040] In some embodiments, the drone interface **250** includes a launch mechanism coupled to the launching pad to launch drones **160** transporting items **150** from the node **120**. The launch mechanism may include a catapult, spring-loaded platform, robotic arm, actuated rails, any combination thereof, or any other suitable mechanism for launching a drone **160**. The launch mechanism may receive a destination for an item **150** from the controller **230** communicatively coupled to the launch mechanism and launch a drone **160** toward the destination. For example, the launch mechanism aligns the drone **160** to a target bearing and launches the drone **160** to follow a determined trajectory based on a distance to the destination. The controller **230** may determine the trajectory by taking into account weather conditions such as wind direction and speed.

[0041] FIG. **2**B illustrates a node **260** according to an embodiment. The node **260** includes a drone interface **262** having four landing pads for docking drones **160**A, **160**B, **160**C, and **160**D. In other embodiments, the drone interface **262** may include a different number of landing pads. The node **260** also includes a chute **264**, enclosure **266**, and window **268** as part of an item interface. The chute **264** may receive and provide items (or receptacles carrying items) from the drones **160**. The drone interface **262** may transport items from the chute **264** to the window **268** via the enclosure **266**. For example, the enclosure **266** may have an actuation system including a conveyor, rollers, or elevator mechanisms. A user or provider can pick-up or drop-off items from the window **268** positioned at approximately waist height. Additionally, the enclosure **266** may include compartments to store items (e.g., up to 30 or more separate compartments) until a user or provider arrives at the window **268** for pick-up.

[0042] FIGS. **2**C, **2**D, and **2**E illustrate configurations of a node according to various embodiments. In the embodiment shown in FIG. **2**D, the chute **264** of the node may rotate to provide or receive items from drones **160** on different landing pads, e.g., which remain stationary. In the embodiment shown in FIG. **2**E, the landing pads of the drone interface **262** may rotate to align different landing pads to the chute **264**, e.g., which remains stationary.

[0043] FIG. **2**F illustrates another node **270** according to an embodiment. The node **270** has a drone interface **271** including a circular-shaped landing pad bordered by a "halo" ring **272**. The ring **272** may emit light to assist drones **160**A and **160**B in locating and docking (e.g., as a fiducial) on the landing pad. Multiple drones **160** may be docked on the landing pad and the drones **160** may transfer items between each other while docked on the landing pad. The drone interface **271** may also include a light **273** that emits light downwards for visibility of a user or provider. The node **270** includes an enclosure **274** as part of an item interface. The node **270** includes a mobile compartment **275**, display device **277**, and window **276** as part of the user interface. The mobile compartment **275** may be transported between the drone interface **271** and the window **276** via an actuation mechanism in the enclosure **274** (e.g., conveyor belt). The display device **277** may have a transflective screen to provide visibility in a range of ambient outdoor lighting conditions (e.g., direct sunlight during the day or darkness at night).

[0044] FIG. **2**G illustrates a node **280** with landing pads according to an embodiment. FIG. **2**H illustrates a landing pad **281** with a fiducial **285** (e.g., a QR code) according to

an embodiment. As shown in the embodiment of FIG. **2**G, a drone interface of the node **280** includes landing pads **281**A, **281**B, **281**C, and **281**D coupled to a column **282**. The drone interface may rotate the landing pads around the column **282**, for example, to provide more clearance for facilitating (e.g., simultaneous) docking of the drones **160**A, **160**B, **160**C, and **160**D. In other embodiments, the drone interface may include a different number of configurable landing pads coupled to the column **282**. Further, the drone interface may rotate the landing pads to be positioned under the cover **283** to provide protection from weather or precipitation. In addition, the cover **283** may include a light **284** for visibility of a user or provider below.

[0045] FIG. **2**I illustrates configurations of landing pads of a node according to various embodiments. In the embodiment of node **290**, a drone **160** is docked on a landing pad **291** offset from a cover **292**. In the embodiment of node **293**, two drones **160** are docked on offset landing pads. In the embodiment of node **294**, three drones **160** are docked on offset landing pads. In the embodiment of node **295**, four drones **160** are docked on offset landing pads, where one of the landing pads overlaps underneath the cover **292**.

Example Item Delivery

[0046] FIG. **3** is a diagram **300** illustrating conventional delivery of items using vehicles. In an example use case, locations A and B correspond to a first and second restaurant, respectively. The first restaurant provides delivery up to a predetermined radius A centered at location A, and the second restaurant provides delivery up to a predetermined radius B centered at location B. A user at location C may receive delivery from the first restaurant because the location C is within the radius A. For example, personnel of the first restaurant drives a vehicle along a route **310** to deliver food to the user. However, the user may not receive delivery from the second restaurant because the location C is outside of the radius B.

[0047] FIG. **4**A is a diagram **400** illustrating delivery of items using drones and vehicles according to an embodiment. In contrast to the conventional example shown in FIG. **3**, the embodiment of FIG. **4**A includes nodes **120** for a drone **160**. Nodes **120**A and **120**B are located at location A and location B, respectively. Node **120**C is located at location D, which is between locations A and B. Radius C indicates a range (e.g., a delivery range or flight capability range) of the drone **160**. For instance, the range represents a distance that the drone **160** may travel, while transporting a certain weight of one or more items **150**, before having to recharge a battery of the drone **160** (or receive other types of maintenance). The network system **100** may determine the range of the drone **160** based on information about the drone (e.g., weight, battery capacity, type of propellers or wings, or other mechanical structures), information about an item transported by the drone (e.g., weight or a threshold duration of allowable transport time for perishable goods), map information, weather conditions, or other types of information.

[0048] As illustrated in FIG. **4**A, since nodes **120**A and **120**B are both within the radius C of node **120**C, the drone **160** may transport an item **150** from node **120**B to node **120**A by making a stop at node **120**C at location D, e.g., an intermediate location. In some embodiments, a first drone **160** transports the item **150** from node **120**B to node **120**C, and a second drone **160** transports the item **150** from node **120**C to node **120**A. This may reduce the total delivery time of the item **150** because the network system **100** does not need to wait for the first drone **160** to recharge for flight. That is, the item **150** is transferred to the (e.g., more charged) second drone **160** that is ready to be launched from the node **120**C shortly after the first drone **160** has landed.

[0049] Accordingly, the network system **100** may increase a range of available delivery of items **150** by using drones **160** to transport the items **150** between nodes **120**. In addition, the network system **100** may provide instructions to providers to complete a segment of a delivery. For example, as shown in FIG. **4**A, the drone **160** transports the item **150** from node **120**B to **120**C during a first segment **402** of a route. The drone **160** transports the item **150** from node **120**C to **120**A during a second segment **404** of the route. A provider picks up the item **150** at the node **120**A and transports the item **150** using a vehicle **140** during a third segment **406** of the route to arrive at a destination location, e.g., location C of the user. Thus, in contrast to the example of FIG. **3** only having vehicles for delivery, in the embodiment shown in FIG. **4**A, a user at location C may receive delivery of an item **150** from location B.

[0050] By coordinating one or more drones **160** and/or providers with vehicles **140**, the network system **100** may improve the efficiency of transportation of items **150** for services of the network system **100** and achieve this at large scale. For instance, drones **160** may transport items **150** for segments that are typically more time consuming for vehicles **140**, e.g., a busy road or to avoid taking a long detour around a body of water or another type of geographical barrier. Nodes **120** of the network system **100** may be positioned nearby transportation or delivery hubs, for example, nearby a high density of restaurants, suppliers (e.g., having inventory of goods to distribute for food or drink preparation), intersections of a delivery routes, providers, or users. Since not all destination locations may be nearby a node **120** or have an area for a drone **160** to land, providers may deliver items **150** from nodes **120** to destination locations (e.g., "last mile" delivery in the supply chain).

[0051] In some embodiments, the network system **100** combines deliveries of items **150**. For example, as shown in FIG. **4**A, the network system **100** determines that a first user at location C requests delivery of a pizza from a pizza restaurant at location B, and that a second user at location E requests delivery of a burger from a burger restaurant at location D. The network system **100** determines that a drone **160** has the capacity to transport the pizza and the burger at the same time along a shared portion of the routes to the end users. Additionally, the network system **100** may determine that the pizza and burger are both foods that should be kept warm and thus are suitable for being transported together on the drone **160**. In particular, the network system **100** provides instructions to personnel of the pizza restaurant, e.g., via a client device **110**, to drop off the pizza (e.g., as an item **150** in a receptacle) at the node **120**B. The network system **100** provides instructions to the node **120**B to provide the pizza to a drone **160** for transportation from the node **120**B to the node **120**C. Furthermore, the network system **100** provides instructions to personnel of the burger restaurant to drop off the burger at the node **120**C. The network system **100** provides instructions to the node **120**C to provide the burger to the drone **160** after the drone **160** has landed at the node **120**C. The network system **100** provides additional

instructions to the node **120**C to launch the drone **160** now transporting both the pizza and burger to node **120**A.

[0052] Following in the above example, the network system **100** may determine an estimated time at which the drone **160** will arrive at node **120**A. Based on the estimated time, the network system **100** may identify a first provider and a second provider to deliver the pizza and burger to the users at locations C and E, respectively (in other embodiments, the same provider may deliver both items). The network system **100** provides navigation information to client devices **110** of the first and second providers to navigate to node **120**A for pickup of the items **150**, e.g., after node **120**A receives the items **150** from the drone **160**. The navigation information may also include a route from node **120**A to the first or second user for delivery by the corresponding provider using a vehicle **140**. Accordingly, the network system **100** improves transportation efficiency by determining that delivery routes of the pizza and burger overlap on the segment **404** between nodes **120**C and **120**A. Though the embodiment shown in FIG. **4**A includes one drone **160**, three nodes **120**A, **120**B, and **120**C, and one or two providers with a vehicle **140**, in practice, the network system **100** coordinates deliveries at large scale including many drones **160**, nodes **120**, and providers with vehicles **140** (e.g., where any number of the nodes **120** may be part of one of the vehicles **140**), and across multiple geographical regions. The coordination may be advantageous, e.g., because the network system can reduce average delivery times, reduce idle time of drones **160** or providers in vehicles **140**, reduce redundant delivery routes, and increase the range of services (e.g., delivery of goods of a greater variety of cuisines) provided to users. In some embodiments, a provider can transport an item **150** while also transporting a user for a trip, e.g., for a different service than delivery of the item **150**.

[0053] In another example use case, the network system **100** provides instructions for drones **160** to distribute items along predetermined routes. For example, a drone **160** receives an item **150** including pizza-making ingredients (e.g., flour, tomatoes, cheese, etc.) from a node **120** at a warehouse. The drone **160** travels on a route including stops at multiple nodes **120** nearby different pizza restaurants. Furthermore, based on estimated turnover or consumption rates of certain ingredients, the network system **100** can schedule deliveries of the items at a given interval such that the pizza restaurants have sufficient supply to meet the demand. In other embodiments, the drones **160** deliver other types of items such as inventory (e.g., consumable or non-consumable goods) to a convenience store. Thus, the restaurants or stores may carry less inventory at a given time, which saves storage space, because their inventory may be replenished at regular intervals via the network system **100**.

[0054] FIG. **4**B is a diagram **410** illustrating delivery of items between mobile nodes according to an embodiment. In an example use case, the network system **100** receives an order for one or more items from a user. For instance, the user orders food from a restaurant, e.g., an item provider. The network system **100** determines an origin location **412** of the items and a destination location **414**, e.g., a delivery address of the user such as the user's home or office. The network system **100** determines a route to deliver the items from the origin location **412** to the destination location **414**, where at least part of the route is via a drone **160**. The route may include waypoints that are associated with stationary or mobile types of nodes **120**. The network system **100** provides instructions to a client device **110** of a provider of a vehicle **140**A mounted with a first (e.g., mobile) node **120**A. In some embodiments, the vehicle **140**A and the node **120**A are the same. The instructions instruct the provider to navigate to the origin location **412** (or a waypoint nearby the origin location **412**) using the vehicle **140**A. In embodiments where the vehicle **140**A is an autonomous (or semi-autonomous) vehicle, the network system **100** may provide the instructions directly to the vehicle **140**A, e.g., instead of instructing a provider to drive the vehicle **140**A. A drone **160** may already be docked on the first node **120**A while the vehicle **140**A is headed to the origin location **412**. Alternatively, the network system **100** may provide instructions to the drone **160** to navigate toward the origin location **412** and dock to the first node **120**A before or after the vehicle **140**A arrives at the origin location **412**.

[0055] Following in the same example, the network system **100** provides instructions to the restaurant to instruct personnel of the restaurant (e.g., a "runner") to bring the items to the first node **120**A. For example, the provider stops the vehicle **140**A at a curb, parking lot, or public transit station nearby the restaurant (e.g., a waypoint) and the personnel may carry the items by foot (or bike, scooter, etc.) from the origin location **412** at the restaurant to the vehicle **140**A. The personnel or provider may provide the items directly to the drone **160** or indirectly via a drone interface **250** of the first node **120**A. The drone **160** may launch from the first node **120**A after receiving the items and either before or after the vehicle **140**A departs from the origin location **412**. For instance, the network system **100** may instruct the provider to navigate the vehicle along a route toward the destination location **414**. At a given point along the route, the network system **100** may command the drone **160** to launch from the first node **120**A to a second (e.g., mobile) node **120**B or a waypoint at which the second node **120**B will be located at during a certain period of time. The second node **120**B is mounted on another vehicle **140**B of another provider of the network system **100**. In some embodiments, the second node **120**B and the vehicle **140**B are the same. In some embodiments, rather than transmitting instructions to the drone **160** to launch (e.g., where the drone **160** uses active mechanisms to navigate and fly), the network system **100** commands the first node **120**A to launch the drone **160**. The instructions may command the first node **120**A to launch the drone **160** with a certain magnitude of force and/or at a given bearing to navigate toward the second node **120**B, e.g., such that the drone **160** may glide to the second node **120**B without necessarily requiring active mechanisms or expending energy.

[0056] The network system **100** transmits instructions to a client device **110** of the provider of the vehicle **140**B to navigate to the destination location **414**. The network system **100** may command to the drone **160** to dock at the second node **120**B after the vehicle **140**B has arrived at the destination location **414** or at a nearby waypoint. Alternatively, the network system **100** may instruct the drone **160** to dock at the second node **120**B located at a certain waypoint, and the vehicle **140**B transports the docked drone **160** (e.g., for the "last mile" of the delivery) to destination location **414**. After the vehicle **140**B arrives at the destination location **414**, the provider may obtain the items from the drone **160** (e.g., directly or indirectly via a drone interface **250** of the second node **120**B. Moreover, the provider may deliver the

items to the user, e.g., carrying the items by foot from the vehicle **140**B to the doorstep of the user's house. In other embodiments, the network system **100** provides a notification to a client device **110** of the user indicating that the items have arrived at the destination location **414**. The user may walk to the second node **120**B or waypoint to obtain the items from the provider, the drone **160**, or the second node **120**B.

[0057] FIG. **4**C is a diagram **420** illustrating delivery of items between mobile nodes and stationary nodes according to an embodiment. The embodiment shown in FIG. **4**C is similar to the example described above with reference to FIG. **4**B. However, the diagram **420** of FIG. **4**C includes an additional third node **120**C that is a stationary node, in contrast to the mobile nodes **120**A and **120**B mounted on (or as part of) the vehicles **140**A and **140**B, respectively. For instance, the third node **120**C is located at a transit hub, commercial area, or residential area. Responsive to receiving an order from a user at the destination location **416**, the network system **100** may determine that the third node **120**C is located within a threshold distance from the destination location **416**. Responsive to this determination, the network system **100** may provide instructions to the drone **160** to navigate to the third node **120**C. In some embodiments, a provider (e.g., or other personnel of the network system **100** or a restaurant associated with the user's order) stationed at the third node **120**C obtains the items from the drone **160**. The provider may transport the items to the user at the destination location **416**. In other use cases, since the third node **120**C is nearby the destination location **416**, the user may travel by foot to the third node **120**C to obtain the items from the provider, or directly from the drone **160** or third node **120**C, e.g., when a provider is not stationed at the third node **120**C.

[0058] FIG. **4**D is another diagram **430** illustrating delivery of items between mobile nodes and stationary nodes according to an embodiment. The embodiment shown in FIG. **4**D is similar to the example described above with reference to FIG. **4**C. However, the diagram **430** of FIG. **4**D includes an additional fourth node **120**D at the origin location **412**. For example, the fourth node **120**D is a stationary node that integrated with the restaurant, e.g., mounted to a rooftop of the restaurant building or located outside on the ground near the restaurant building. Personnel of the restaurant may bring items to the fourth node **120**D for delivery by a drone **160**A to a user at the destination location **416** and may bring other items to the first node **120**A for delivery by another drone **160**B to another user at the destination location **414**.

[0059] FIG. **4**E is yet another diagram **440** illustrating delivery of items between mobile nodes and stationary nodes according to an embodiment. The embodiment shown in FIG. **4**E is similar to the examples described above with reference to FIGS. **4**B-D. However, the diagram **440** of FIG. **4**D does not include a mobile node at the origin location **412**. Moreover, the drone **160** may deliver items to a user at the destination location **416** without necessarily requiring the third node **120**C or a mobile node nearby the destination location **416**. For instance, the drone **160** may drop off the items on a doorstep, yard, patio, balcony, or other part of the user's house, apartment, office, etc.

[0060] The embodiments of FIGS. **4**B-E illustrate different routing options that the network system **100** may use to deliver items between nodes using drones **160**, which provide advantages over conventional methods of delivery of items, e.g., as shown in FIG. **3**. For instance, third parties that have items available to users may use the network system **100** to deliver the items to the users, e.g., instead of developing their own delivery systems, which may require greater set-up costs. A large-scale infrastructure of nodes **120** (e.g., stationary and/or mobile) and providers of the network system **100** allows item providers such as restaurants or stores to deliver items to users across geographical regions at the convenience of the item providers and the end users.

[0061] Nodes **120** may be shared among multiple item providers, and the network system **100** can implement load balancing to increase efficient utilization of drones **160** and/or providers operating vehicles **140**. For example, responsive to determining that a particular geographical area has an increase in deliveries during a period of time, the network system **100** may instruct additional drones **160** or providers to travel to that geographical area, e.g., from less busy areas during that same period of time. Further, the network system **100** may determine similarities between delivery routes and aggregate deliveries for multiple orders. For instance, the network system **100** may determine a stationary node **120** located at a public area (e.g., a bus stop) nearby multiple restaurants. The network system **100** may instruct the restaurants to transport food orders of users to the node **120**, which will be picked up by one or more drones **160** for distribution to the users. Alternatively, the network system **100** may instruct restaurants to transport the food to a certain waypoint and send a mobile node **120** to the waypoint, e.g., instructing a provider to driver a vehicle **140** mounted with or having the mobile node **120** to the waypoint.

[0062] In contrast to vehicles that need to travel on roads, drones **160** can navigate in straight-line (or near straight-line) distances in air, as well as routes in air determined using the Haversine formula or law of Haversines (e.g., based on distances between points of a sphere). Thus, delivery by drones **160** may reduce average delivery times as well as fuel, electricity, or labor costs, especially in dense or high-traffic urban areas. Moreover, by using drones **160** for at least part of delivery routes, the network system **100** can reduce or eliminate the need for manual shipping and handling of items, e.g., human labor. Further, in some embodiments, the users have little or no direct interaction with the drones **160**, which may help reduce noise pollution and safety incidents between users and drones **160**. In some embodiments, for short deliveries less than two miles, delivery by drones **160** via nodes **120** may sometimes be faster than conventional delivery methods. Deliveries between two to seven miles may always be faster by the drones **160**. Deliveries greater than seven miles and up to approximately 12 miles may be achievable by the drones **160**, but not by conventional delivery methods, within a threshold time, e.g., because it is inefficient for restaurants to have personnel drive roundtrips for those longer distances of delivery routes.

Example Process Flow

[0063] FIG. **5**A is a flowchart illustrating a process **500** for providing delivery using a drone **160** according to an embodiment. In some embodiments, the network system **100** uses the process **500** within the system environment in FIG. **1**. The process **500** may include different or additional

steps than those described in conjunction with FIG. **5**A in some embodiments or perform steps in different orders than the order described in conjunction with FIG. **5**A.

[0064] In one embodiment, the network system **100** determines a first waypoint located within a first threshold distance from an origin location of a first item **150** for delivery to a first user of the network system **100** (**510**). The network system **100** determines a second waypoint located within a second threshold distance from the first waypoint based on a range of travel of a drone **160** (**520**). The drone **160** is configured for transporting items **150** between nodes located at waypoints. The nodes include at least drone interfaces for navigation of the drone (e.g., launching or landing the drone). The network system **100** transmits navigation information to a first node **120** to direct the drone **160** for transporting the first item **150** from the first waypoint to a second node **120** at the second waypoint (**530**). The network system **100** determines an estimated time at which the drone **160** will arrive at the second waypoint (**540**). The network system **100** may predict the estimated time based on map information (e.g., distance to travel), weather conditions, or information about the drone (e.g., flight speed, battery level, or weight of items transported).

[0065] The network system **100** determines a first route for a first provider of the network system **100** to deliver the first item **150** from the second waypoint to a first destination location of the first user (**550**). The first item **150** is ready for pickup at the second waypoint by the first provider at the estimated time. The network system **100** transmits the first route to a first client device **110** of the first provider (**560**). The network system **100** may provide the first route to the first provider on or after the estimated time. In some embodiments, the network system **100** may provide the first route to the first provider before the estimated time such that the first provider is expected to arrive at the second waypoint by the estimated time (or within a threshold time afterwards). Thus, the network system **100** may reduce an amount of time between drop-off of the item **150** by the drone **160** and pickup of the same item **150** by the first provider.

[0066] In some embodiments, the network system **100** determines a second item **150** at the first node **120** for delivery to a second user of the network system **100** at a second destination location within a threshold distance from the second waypoint. Responsive to determining that the drone **160** has capacity to transport the first and second items **150** simultaneously, network system **100** transmits information to the first node **120** to provide the second item **150** to the drone **160** for transport with the first item **150** to the second node **120**. The network system **100** determines a second route for a second provider of the network system **100** to deliver the second item **150** from the second node **120** to the second destination location. The network system **100** transmits the second route to a second client device **110** of the second provider.

[0067] In other embodiments, the network system **100** transmits a notification regarding delivery of the second item **150** to a client device **110** of the second user according to the predicted destination time, e.g., notifying the second user that the second item **150** is ready for pickup. Further, the network system **100** may transmit a route to the client device for the second user to navigate from the second destination location to the second waypoint.

[0068] FIG. **5**B is a flowchart illustrating another process **570** for providing delivery using a drone **160** according to an embodiment. In some embodiments, the network system **100** uses the process **570** within the system environment in FIG. **1**. The process **570** may include different or additional steps than those described in conjunction with FIG. **5**B in some embodiments or perform steps in different orders than the order described in conjunction with FIG. **5**B.

[0069] In an embodiment, a server (e.g., of the network system **100**) receives a first request from a client device **110** of a user for an item **150**, where the first request includes a delivery location for the item **150** (**572**). The server selects an item provider capable of providing the item **150** at an origin node **120** (**574**). The server transmits a second request to the item provider to provide the item **150** at the origin node **120** (**576**). For instance, the second request may indicate that the origin node **120** is stationary at a restaurant or a public transit hub or that the origin node **120** is mobile and will arrive at a waypoint nearby the item provider by an estimated arrival time. The item provider may send a runner to carry the item **150** to the waypoint.

[0070] The server receives, from the item provider, a confirmation that the item **150** will be provided at the origin node **120** at a first time (**578**). The server commands (e.g., by transmitting instructions) a drone **160** to retrieve the item **150** from the origin node **120** not earlier than the first time, and to deliver the item to a destination node **120** (**580**). The server selects the destination node **120** according to the delivery location for the item. The server determines a predicted destination time indicative of a predicted time at which the drone **160** will deliver the item to the destination node **120** (**582**). The server transmits a notification regarding delivery of the item **150** to the client device **110** according to the predicted destination time (**584**).

[0071] In some embodiments, the server selects a ground-based vehicle service provider based on a location of the destination node **120**. The provider may drive a vehicle **140** to the (e.g., stationary) destination node **120** to pick-up the item **150**. Alternatively, the destination node **120** may be mobile and coupled to (or part of) the vehicle **140** of the provider. The server may transmit instructions to the vehicle service provider to transport the item **150** from the destination node **120** to the delivery location at a time not earlier than the predicted destination time.

Example Physical Components of a Computer

[0072] FIG. **6** is a high-level block diagram illustrating physical components of a computer **600** used as part or all of the components from FIG. **1** (e.g., the network system **100**, nodes **120**, client devices **110**, or drones **160**), according to one embodiment. Illustrated are at least one processor **602** coupled to a chipset **604**. Also coupled to the chipset **604** are a memory **606**, a storage device **608**, a graphics adapter **612**, and a network adapter **616**. A display **618** is coupled to the graphics adapter **612**. In one embodiment, the functionality of the chipset **604** is provided by a memory controller hub **620** and an I/O controller hub **622**. In another embodiment, the memory **606** is coupled directly to the processor **602** instead of the chipset **604**.

[0073] The storage device **608** is any non-transitory computer-readable storage medium, such as a hard drive, compact disk read-only memory (CD-ROM), DVD, or a solid-state memory device. The memory **606** holds instructions and data used by the processor **602**. The graphics adapter

612 displays images and other information on the display **618**. The network adapter **616** couples the computer **600** to a local or wide area network.

[0074] As is known in the art, a computer **600** can have different and/or other components than those shown in FIG. **6**. In addition, the computer **600** can lack certain illustrated components. In one embodiment, a computer **600** such as a server or smartphone may lack a graphics adapter **612**, and/or display **618**, as well as a keyboard or pointing device. Moreover, the storage device **608** can be local and/or remote from the computer **600**, e.g., embodied within a storage area network (SAN).

[0075] As is known in the art, the computer **600** is adapted to execute computer program modules or engines for providing functionality described herein. As used herein, the terms "module" or "engine" refer to computer program logic utilized to provide the specified functionality. Thus, a module and/or engine can be implemented in hardware, firmware, and/or software. In one embodiment, program modules and/or engines are stored on the storage device **608**, loaded into the memory **606**, and executed by the processor **602**.

Additional Configurations

[0076] The foregoing description of the embodiments of the invention has been presented for the purpose of illustration; it is not intended to be exhaustive or to limit the invention to the precise forms disclosed. Persons skilled in the relevant art can appreciate that many modifications and variations are possible in light of the above disclosure.

[0077] Some portions of this description describe the embodiments of the invention in terms of algorithms and symbolic representations of operations on information. These algorithmic descriptions and representations are commonly used by those skilled in the data processing arts to convey the substance of their work effectively to others skilled in the art. These operations, while described functionally, computationally, or logically, are understood to be implemented by computer programs or equivalent electrical circuits, microcode, or the like. Furthermore, it has also proven convenient at times, to refer to these arrangements of operations as modules, without loss of generality. The described operations and their associated modules may be embodied in software, firmware, hardware, or any combinations thereof.

[0078] Any of the steps, operations, or processes described herein may be performed or implemented with one or more hardware or software modules, alone or in combination with other devices. In one embodiment, a software module is implemented with a computer program product including a computer-readable non-transitory medium containing computer program code, which can be executed by a computer processor for performing any or all of the steps, operations, or processes described.

[0079] Embodiments of the invention may also relate to a product that is produced by a computing process described herein. Such a product may include information resulting from a computing process, where the information is stored on a non-transitory, tangible computer readable storage medium and may include any embodiment of a computer program product or other data combination described herein.

[0080] Finally, the language used in the specification has been principally selected for readability and instructional purposes, and it may not have been selected to delineate or circumscribe the inventive subject matter. It is therefore intended that the scope of the invention be limited not by this detailed description, but rather by any claims that issue on an application based hereon. Accordingly, the disclosure of the embodiments of the invention is intended to be illustrative, but not limiting, of the scope of the invention, which is set forth in the following claims.

1.-**20**. (canceled)

21. A computing system, comprising:

one or more processors; and

one or more non-transitory computer-readable media that store instructions that, when executed by the one or more processors, cause the computing system to perform operations, the operations comprising

receiving data indicating a first item that is to be located at a first node, wherein the first item is associated with a first provider, and wherein the first item is to be delivered to a first destination location for a first user,

receiving data indicating a second item that is to be located at the first node, wherein the second item is associated with a second provider, and wherein the second item is to be delivered to a second destination location for a second user,

determining a second node for the first item and the second item based at least in part on the first destination location and the second destination location, wherein the second node is located within a threshold distance from the first destination location and the second destination location,

determining an aerial drone that has capacity to transport the first item with the second item along at least a portion of a route from the first node to the second node, and

providing navigation information for the aerial drone, the navigation information comprising data indicative of at least the portion of the route between the first node and the second node for transporting the first item with the second item.

22. The computing system of claim **21**, wherein the operations further comprise:

determining an estimated time at which the aerial drone will arrive at the second node; and

providing data indicative of the estimated time at which the aerial drone will arrive at the second node.

23. The computing system of claim **22**, wherein the data indicative of the estimated time at which the aerial drone will arrive at the second node is provided to at least one of: a provider of ground-based vehicles; a client device associated with a ground-based vehicle; or a human.

24. The computing system of claim **21**, wherein the second node is determined at least in part on a travel range of the aerial drone.

25. The computing system of claim **21**, wherein the first provider comprises a first restaurant and the second provider comprises a second restaurant, wherein the first item comprises a first food item of the first restaurant and the second item comprises a second food item of the second restaurant.

26. The computing system of claim **21**, wherein the operations further comprise determining that the first item can be transported with the second item based at least in part on a temperature of at least one of: the first item; or the second item.

27. The computing system of claim **21**, wherein at least one of the first item or the second item are transported to the first node by at least one of: a human walking to the first node; a ground-based vehicle; or another aerial drone.

28. The computing system of claim **21**, wherein the first node is within a threshold distance of a first origin location of the first provider and a second origin location of the second provider.

29. The computing system of claim **21**, wherein the operations further comprise:

determining the first node for the first provider based at least in part on a first origin location of the first provider; and

providing data indicative of the first node for the first provider.

30. The computing system of claim **21**, wherein the operations further comprise:

determining the first node for the second provider based at least in part on a second origin location of the second provider; and

providing data indicative of the first node for the second provider.

31. A computer-implemented method for item delivery, comprising:

determining, using one or more processors, a first node located within a first threshold distance from an origin location of an item for delivery to a user;

providing, using the one or more processors, instructions to a first client device associated with a first handler of the item to direct the first handler to deliver the item to the first node;

determining, using the one or more processors, a second node located within a second threshold distance from the first node based on a range of travel of an aerial drone, the aerial drone configured for aerial travel between at least the first and second nodes;

providing, using the one or more processors, navigation information for the aerial drone to transport the item from the first node to the second node;

determining, using the one or more processors, an estimated time at which the aerial drone will arrive at the second node; and

providing, using the one or more processors, data indicative of the estimated time at which the drone will arrive at the second node to a second client device.

32. The computer-implemented method of claim **31**, wherein the second client device is associated with a second handler, and wherein the method further comprises:

determining, using the one or more processors, a route to navigate the second handler from the second node to a destination location of the user; and

providing, using the one or more processors to the second client device, data indicative of the route to navigate the second handler from the second node to the destination location of the user.

33. The computer-implemented method of claim **31**, wherein the aerial drone is located at a third node, and wherein the method comprises:

providing, using the one or more processors, navigation information for the aerial drone to travel from the third node to the first node.

34. The computer-implemented method of claim **31**, wherein the first handler comprises a provider of the item.

35. The computer-implemented method of claim **31**, wherein at least one of the first handler or the second handler of the item comprises a ground-based vehicle.

36. The computer-implemented method of claim **31**, wherein at least one of the first handler or the second handler of the item comprises another aerial drone.

37. One or more tangible, non-transitory, computer readable media that store instructions that when executed by the one or more processors cause the computing system to perform operations comprising:

receiving data indicating a first item that is to be located at a first node, wherein the first item is associated with a first provider, and wherein the first item is to be delivered to a first destination location for a first user;

receiving data indicating a second item that is to be located at the first node, wherein the second item is associated with a second provider, and wherein the second item is to be delivered to a second destination location for a second user;

determining a second node for the first item and the second item based at least in part on the first destination location and the second destination location, wherein the second node is located within a threshold distance from the first destination location and the second destination location;

determining an aerial drone that has capacity to transport the first item with the second item along at least a portion of a route from the first node to the second node;

determining an estimated time at which the aerial drone will arrive at the second node; and

providing data indicative of the estimated time at which the aerial drone will arrive at the second node.

38. The one or more tangible, non-transitory, computer readable media of claim **37**, wherein the data indicative of the estimated time at which the aerial drone will arrive at the second node is provided to at least one of: a provider of ground-based vehicles, a client device associated with a ground-based vehicle, or a human.

39. The one or more tangible, non-transitory, computer readable media of claim **37**, wherein the operations further comprise:

providing navigation information for the aerial drone, the navigation information comprising data indicative of at least the portion of the route between the first node and the second node for transporting the first item with the second item.

40. The one or more tangible, non-transitory, computer readable media of claim **37**, wherein the second node is determined at least in part on a travel range of the aerial drone.

41. The one or more tangible, non-transitory, computer readable media of claim **37**, wherein the first provider comprises a first restaurant and the second provider comprises a second restaurant, wherein the first item comprises a first food item of the first restaurant and the second item comprises a second food item of the second restaurant.

42. The one or more tangible, non-transitory, computer readable media of claim **37**, wherein the operations further comprise determining that the first item can be transported with the second item based at least in part on a temperature of at least one of: the first item; or the second item.

43. The one or more tangible, non-transitory, computer readable media of claim **37**, wherein at least one of the first

item or the second item are transported to the first node by at least one of: a human walking to the first node; a ground-based vehicle; or another aerial drone.

44. The one or more tangible, non-transitory, computer readable media of claim **37**, wherein the first node is within a threshold distance of a first origin location of the first provider and a second origin location of the second provider.

45. The one or more tangible, non-transitory, computer readable media of claim **37**, wherein the operations further comprise:

determining the first node for the first provider based at least in part on a first origin location of the first provider; and

providing data indicative of the first node for the first provider.

46. The one or more tangible, non-transitory, computer readable media of claim **37**, wherein the operations further comprise:

determining the first node for the second provider based at least in part on a second origin location of the second provider; and

providing data indicative of the first node for the second provider.

* * * * *