US 20210184756A1

(19) United States

(12) Patent Application Publication

NOCON et al.

(10) Pub. No.: US 2021/0184756 A1

(43) Pub. Date: Jun. 17, 2021

(54) NEAR FIELD COMMUNICATION ANTENNA SYSTEM FOR A PLAYSET

(71) Applicant: **Disney Enterprises, Inc.**, Burbank, CA (US)

(72) Inventors: **Nathan D. NOCON**, Valencia, CA (US); **Janice K. ROSENTHAL**, Pasadena, CA (US); **Elliott H. BAUMBACH**, Porter Ranch, CA (US); **Michael P. GOSLIN**, Sherman Oaks, CA (US); **Hunter J. GIBSON**, Burbank, CA (US); **Jason A. YEUNG**, Glendale, CA (US)

(21) Appl. No.: **16/714,280**

(22) Filed: **Dec. 13, 2019**

Publication Classification

(51) **Int. Cl.**

H04B 7/155	(2006.01)
H04B 5/00	(2006.01)
A63H 3/52	(2006.01)

(52) **U.S. Cl.**

CPC ***H04B 7/15507*** (2013.01); *A63H 5/00* (2013.01); ***A63H 3/52*** (2013.01); ***H04B 5/005*** (2013.01)

(57) **ABSTRACT**

A playset comprises a near field communication extending system. The near field communication extending comprises a main antenna and a plurality of extending antennas. The main antenna is positioned at a first location of the playset and configured to wirelessly communicate to a near field communication device of a mobile device. The plurality of extending antennas is positioned at a plurality of different locations in an interior of the playset. Each of the plurality of extending antennas is connectable to the main antenna via a plurality of connection elements. The playset further comprises an antenna switching mechanism coupled to the plurality of extending antennas via a plurality of connection elements. The antenna switching mechanism is configured to switchably couple the main antenna with each of the plurality of extending antennas.

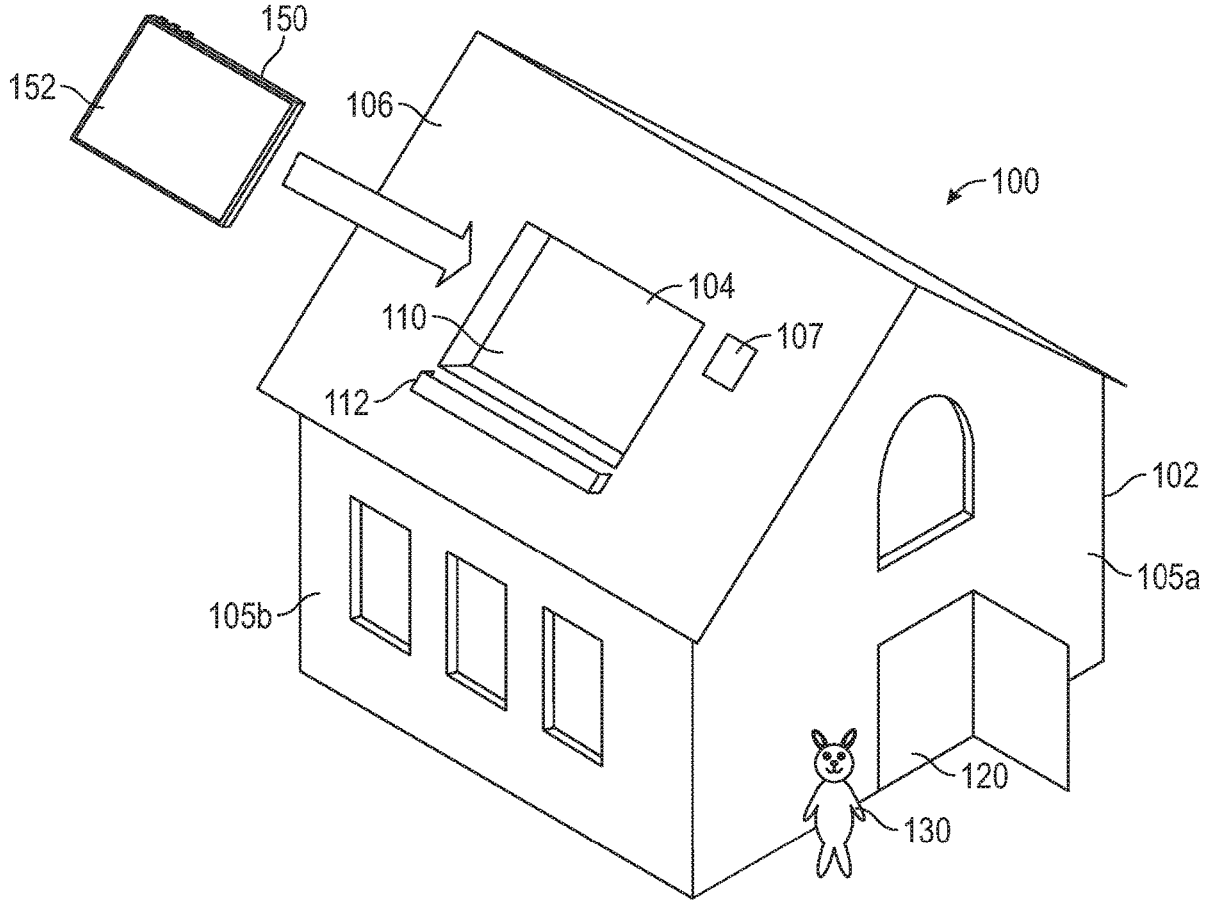

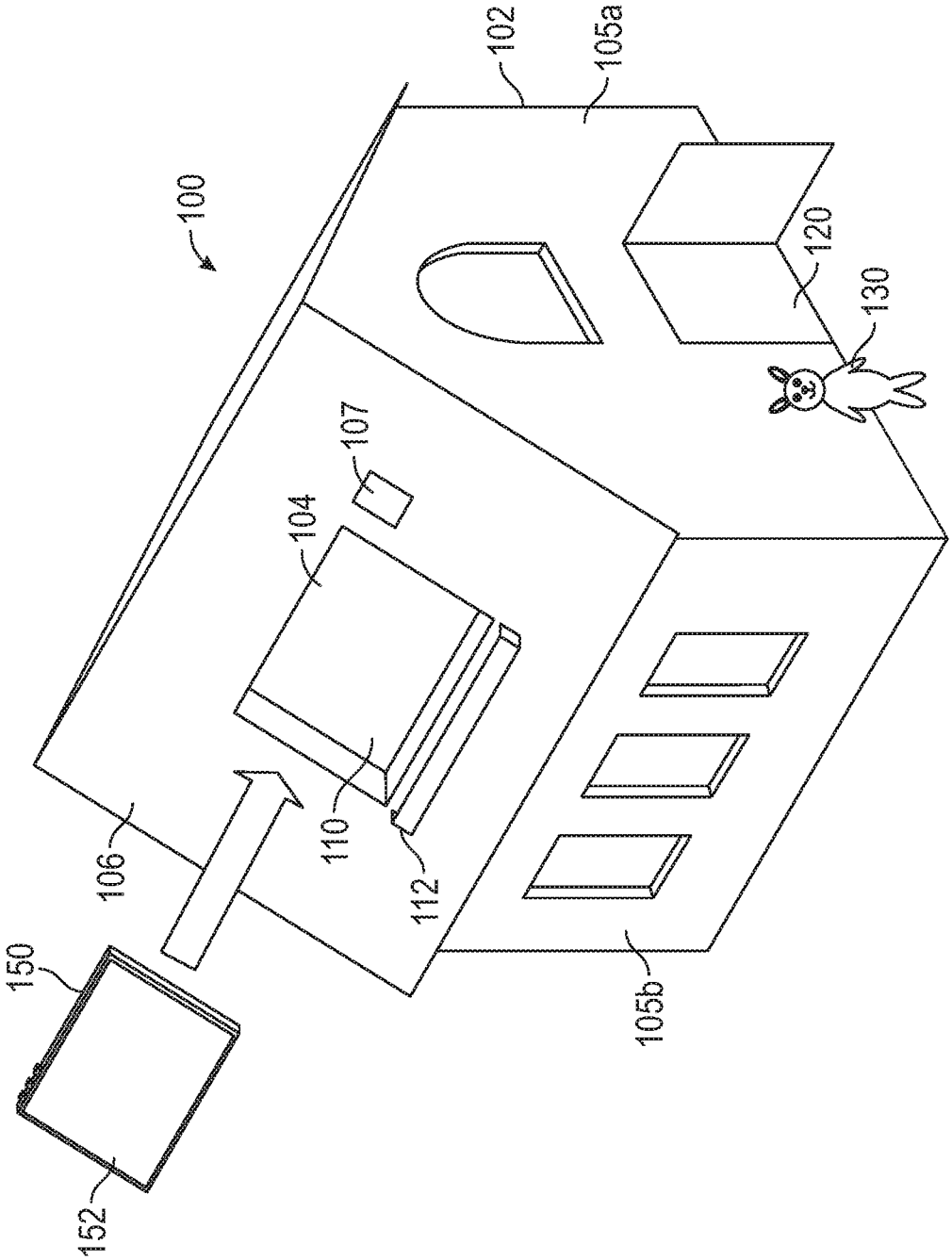

FIG. 1A

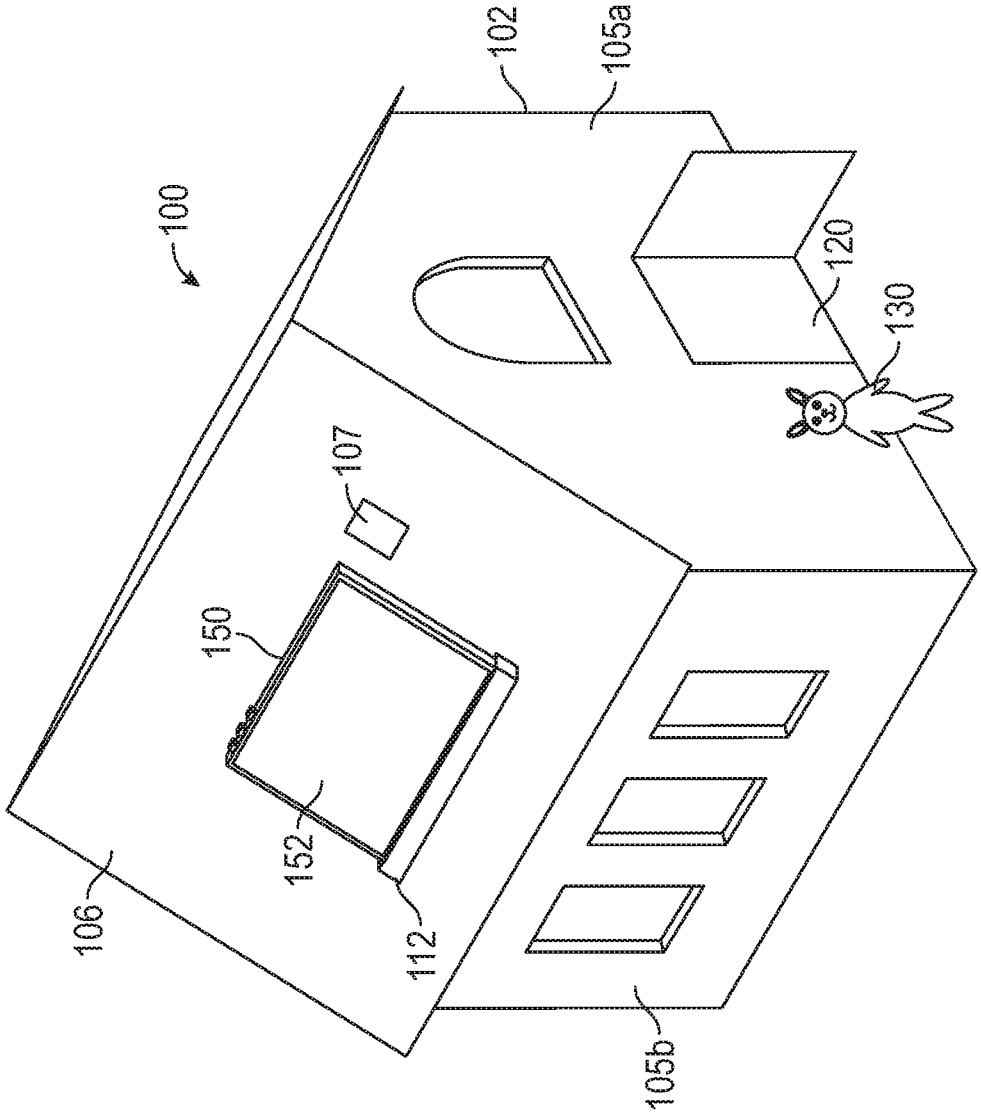

FIG. 1B

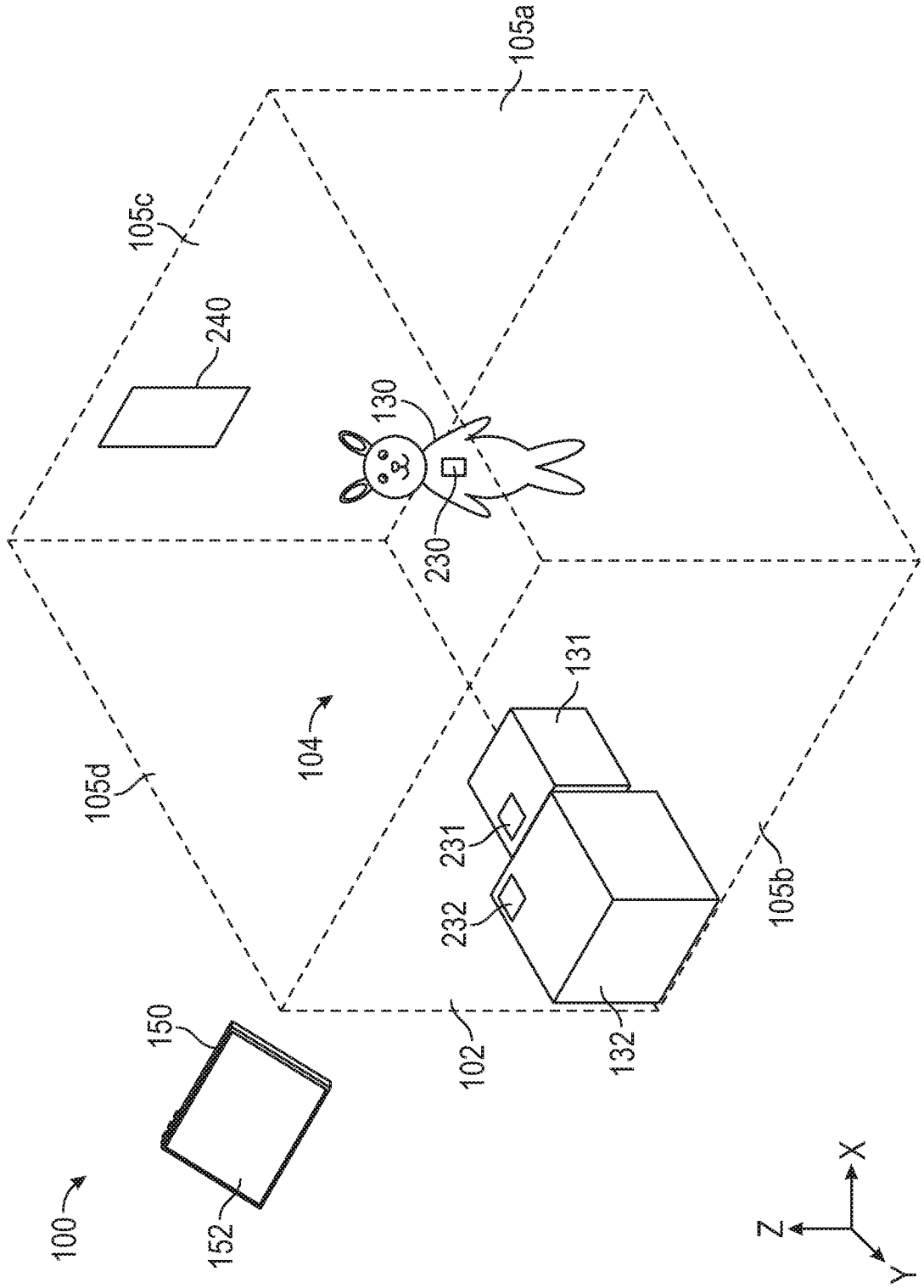
105a
105c
240
130
230
105d
104
131
231
232
105b
150
102
132
152
100
Z
X
Y

FIG. 2A

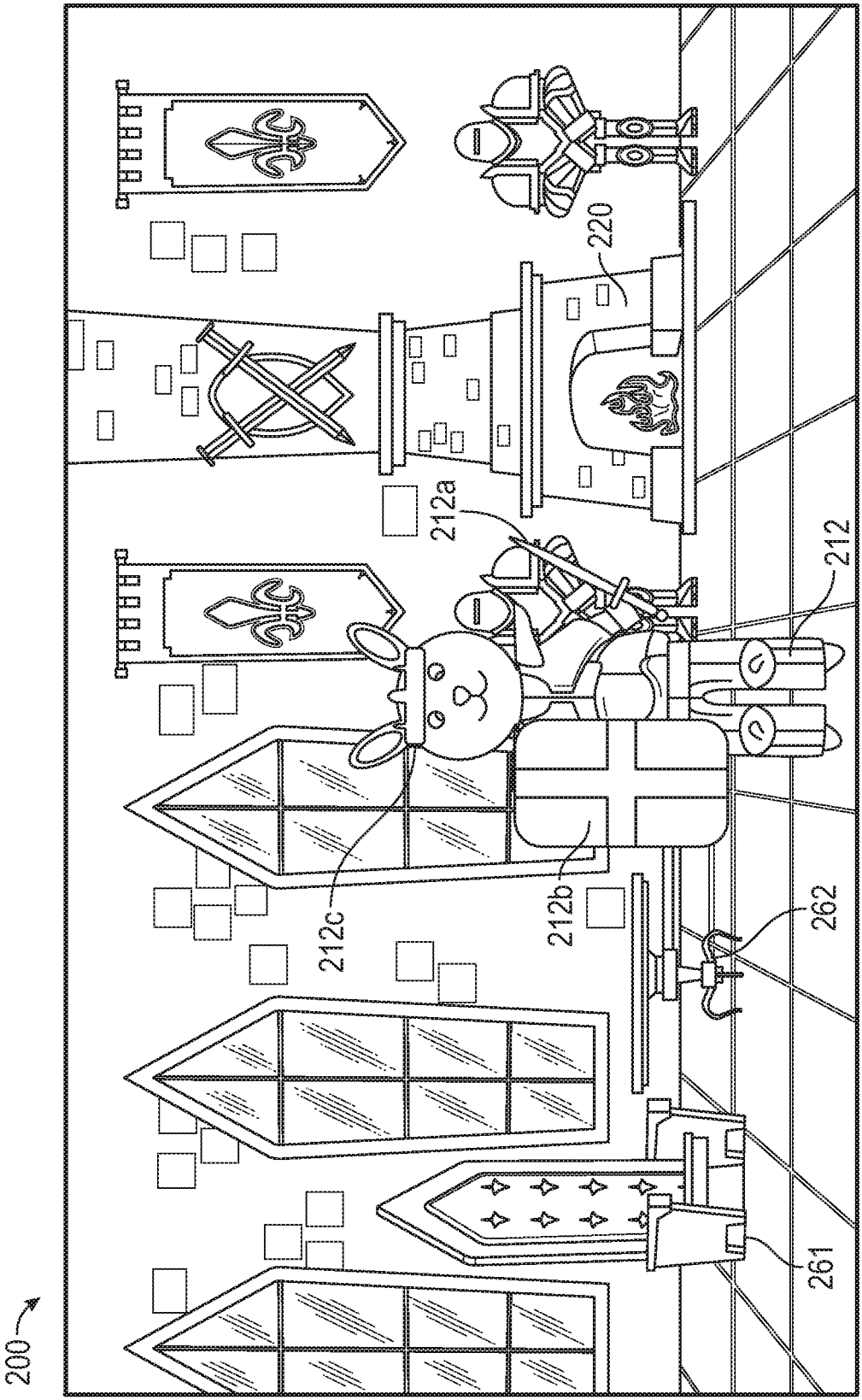

FIG. 2B

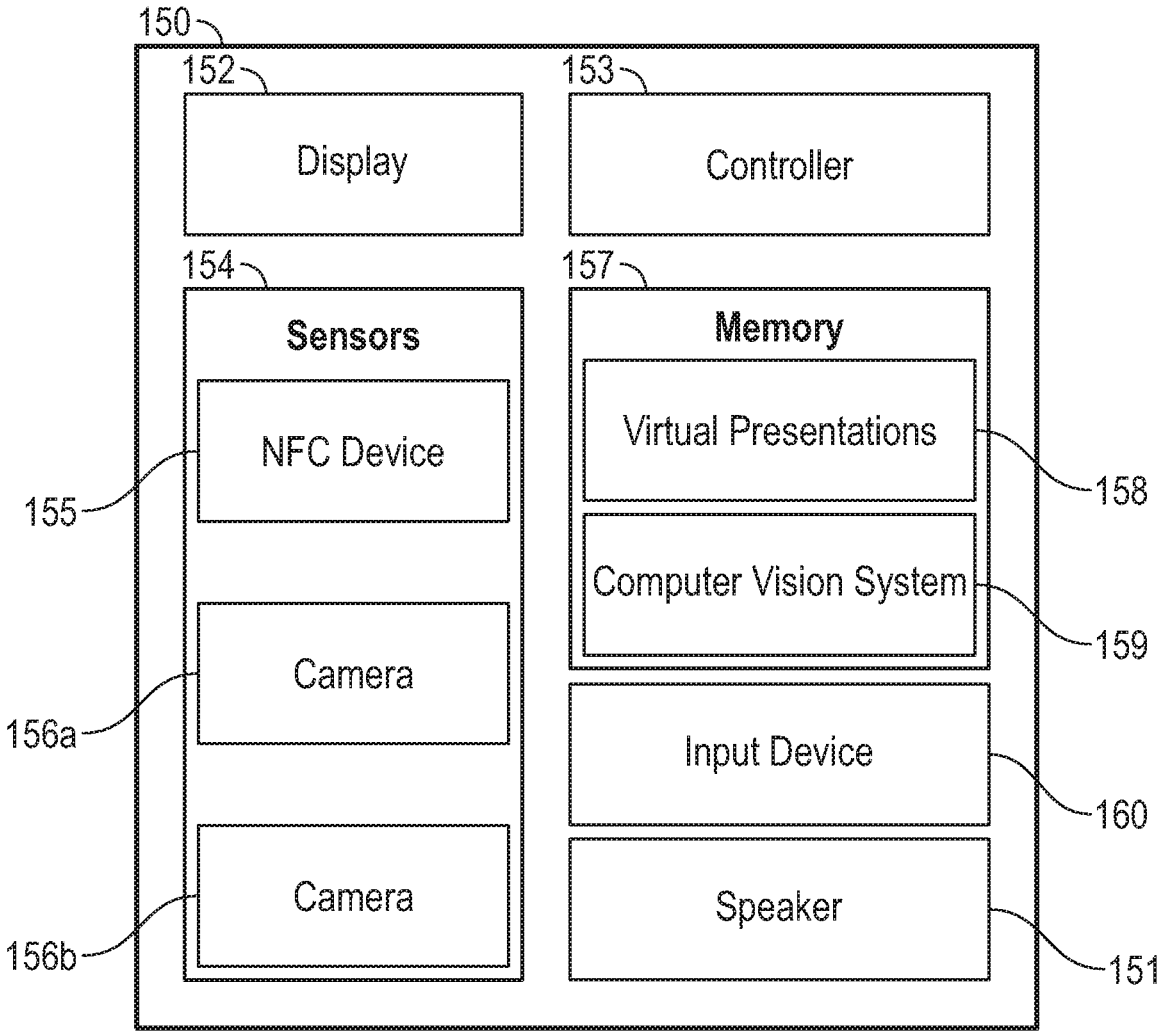
150
152
Display
153
Controller
154
Sensors
NFC Device
155
Camera
156a
Camera
156b
157
Memory
Virtual Presentations
158
Computer Vision System
159
Input Device
160
Speaker
151

FIG. 3

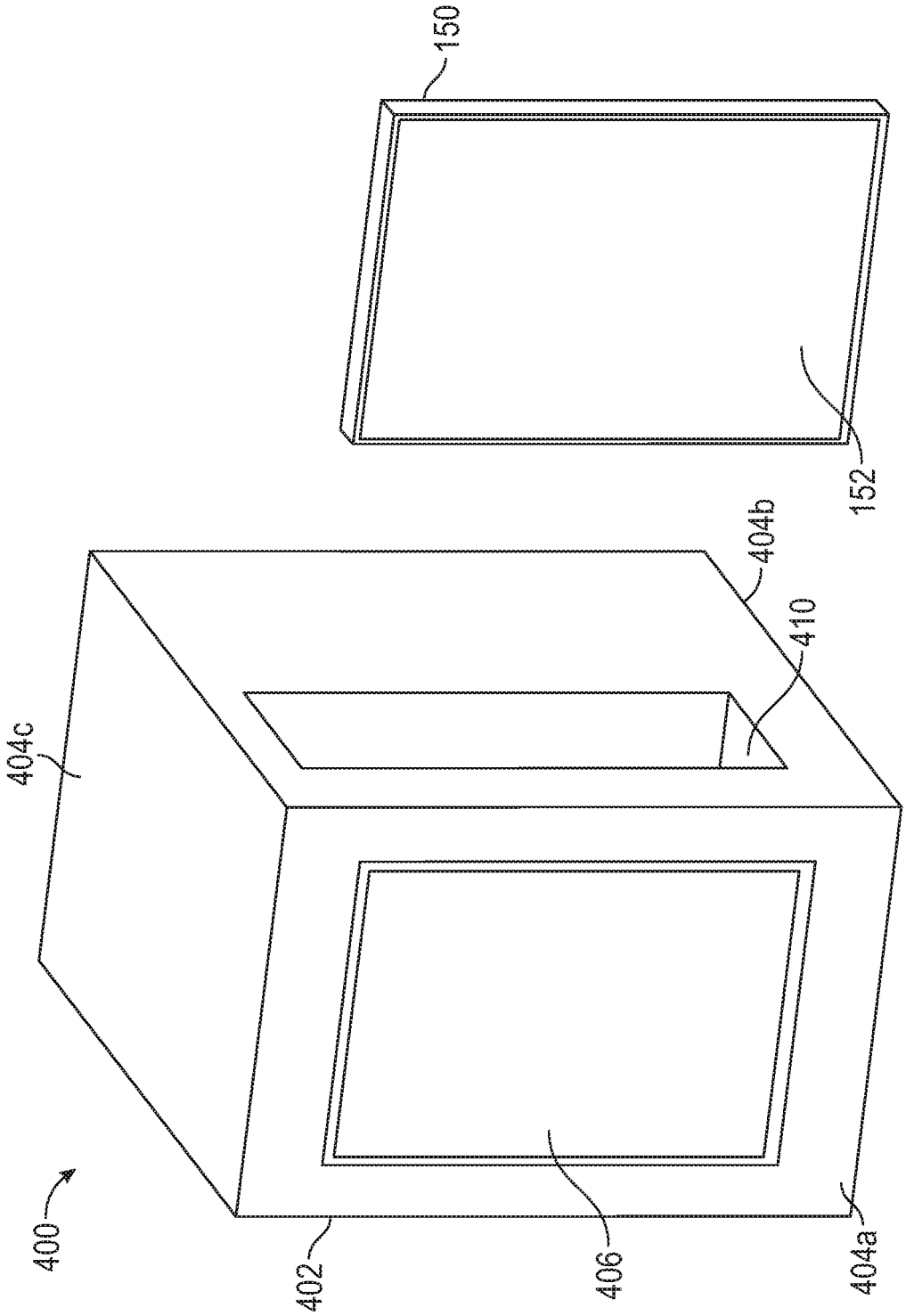

FIG. 4

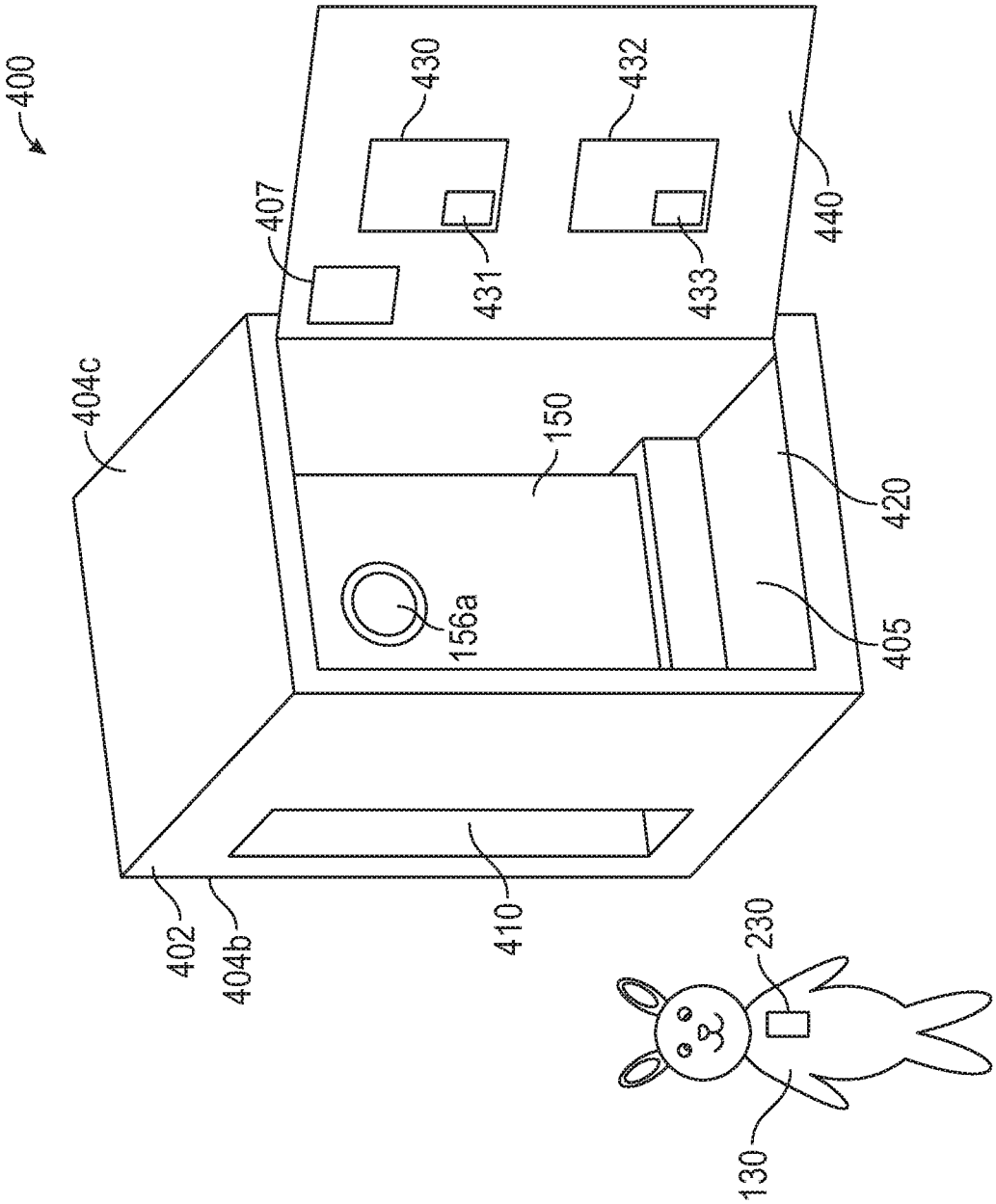
400
404c
407
430
431
432
433
440
150
156a
420
405
402
404b
410
230
130

FIG. 5

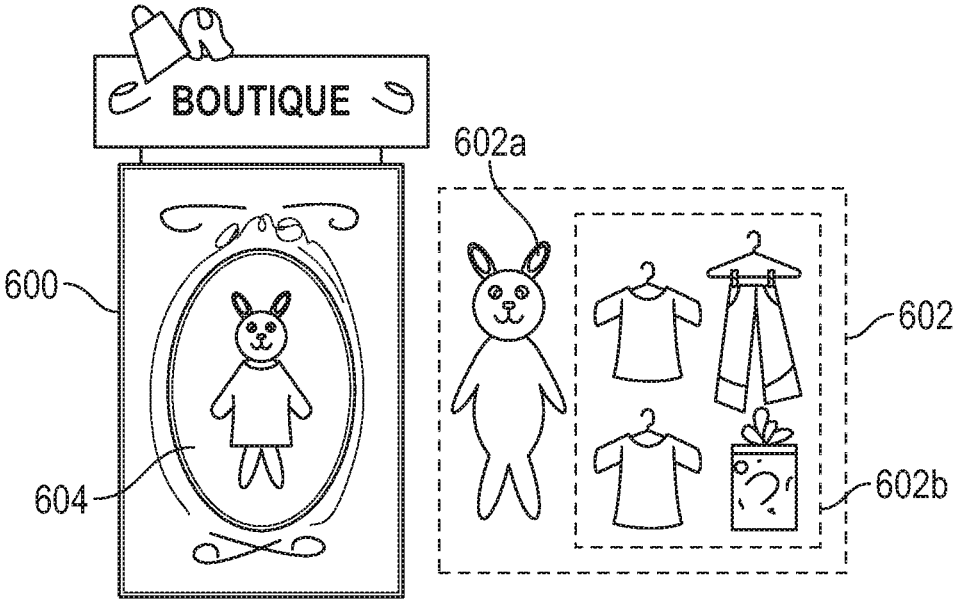

FIG. 6A

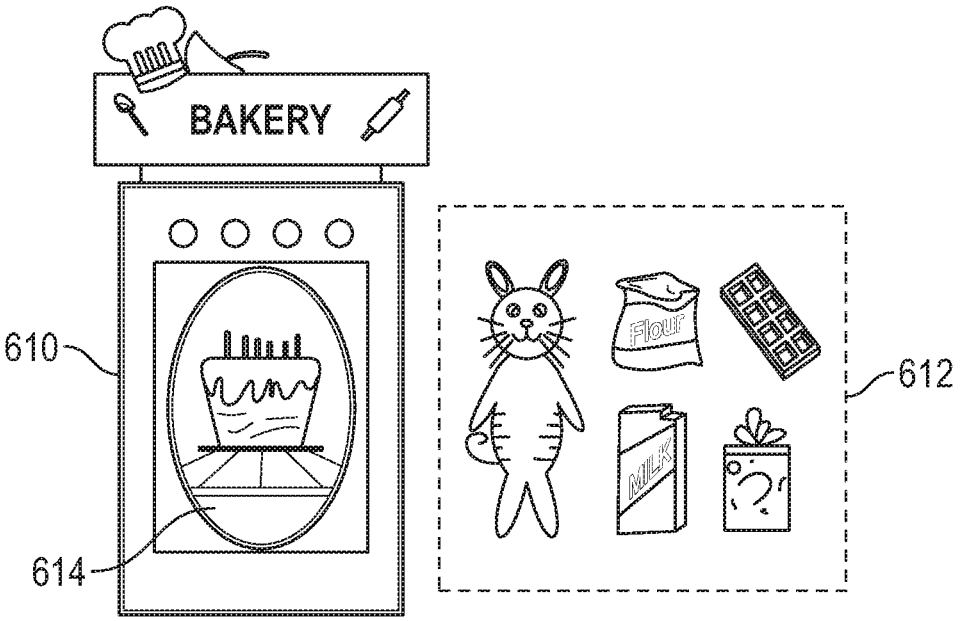

FIG. 6B

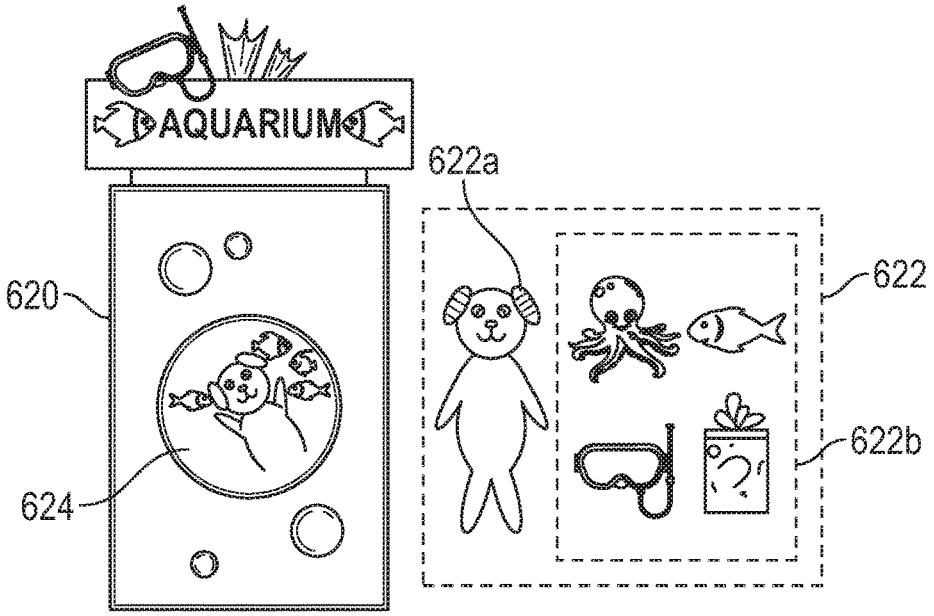
AQUARIUM
620
624
622a
622
622b

FIG. 6C

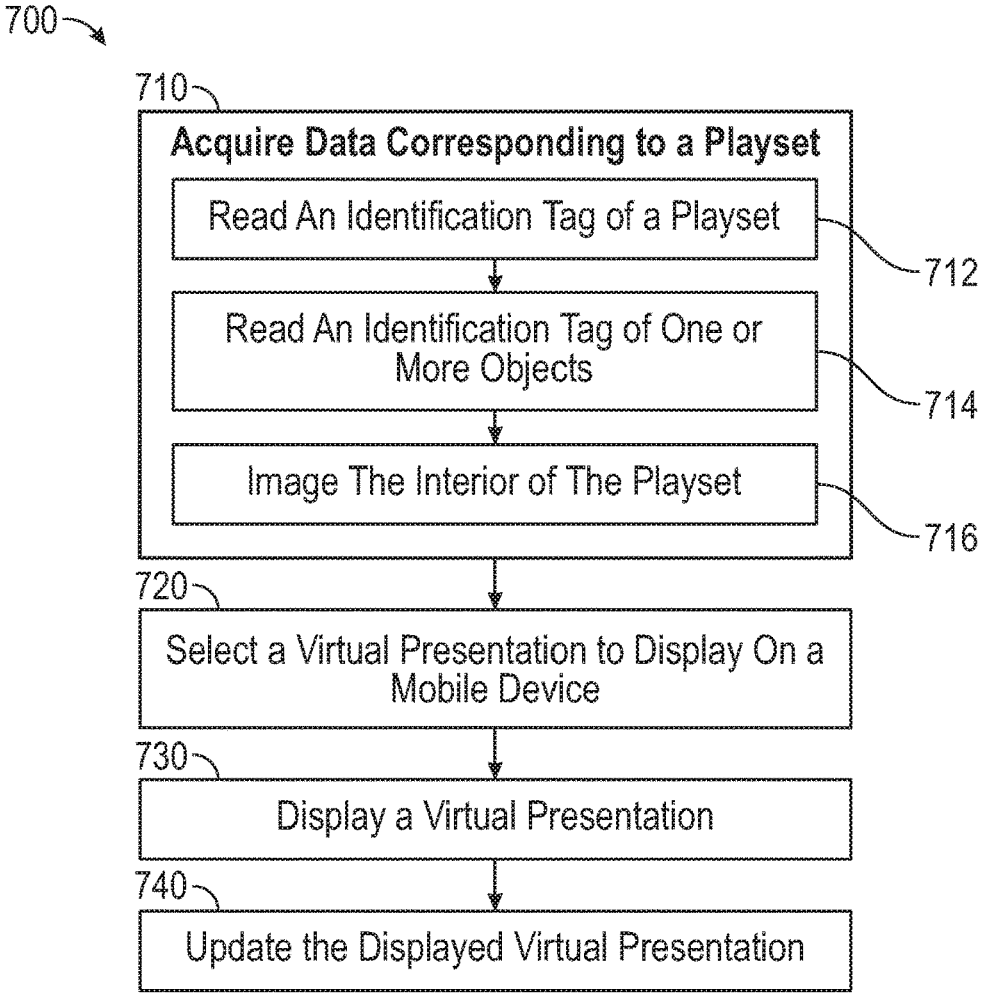
700
710
Acquire Data Corresponding to a Playset
Read An Identification Tag of a Playset
712
Read An Identification Tag of One or More Objects
714
Image The Interior of The Playset
716
720
Select a Virtual Presentation to Display On a Mobile Device
730
Display a Virtual Presentation
740
Update the Displayed Virtual Presentation

FIG. 7

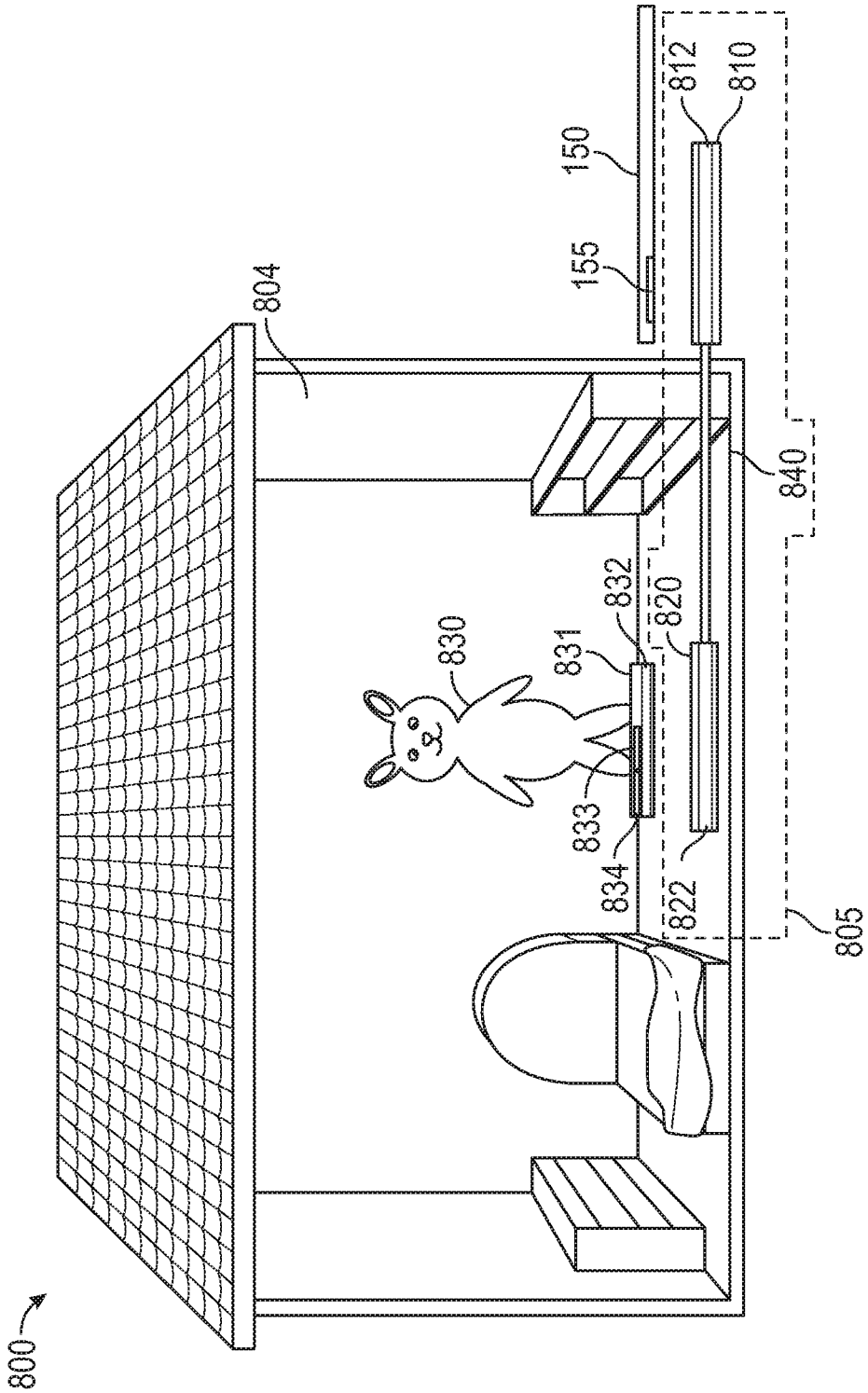

FIG. 8

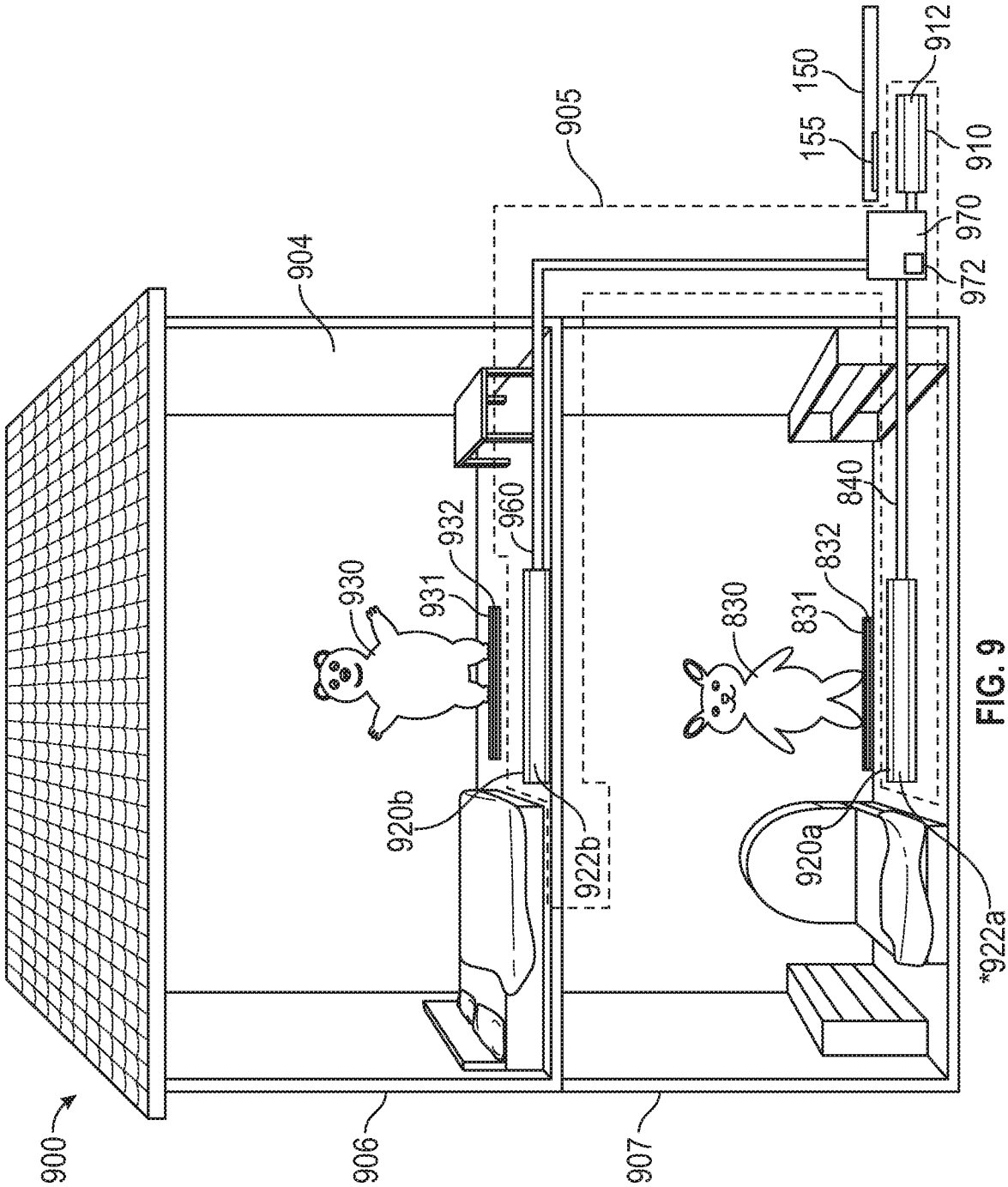
900
906
907
904
905
930
931
932
960
920b
922b
830
831
832
840
920a
*922a
150
155
912
910
970
972

FIG. 9

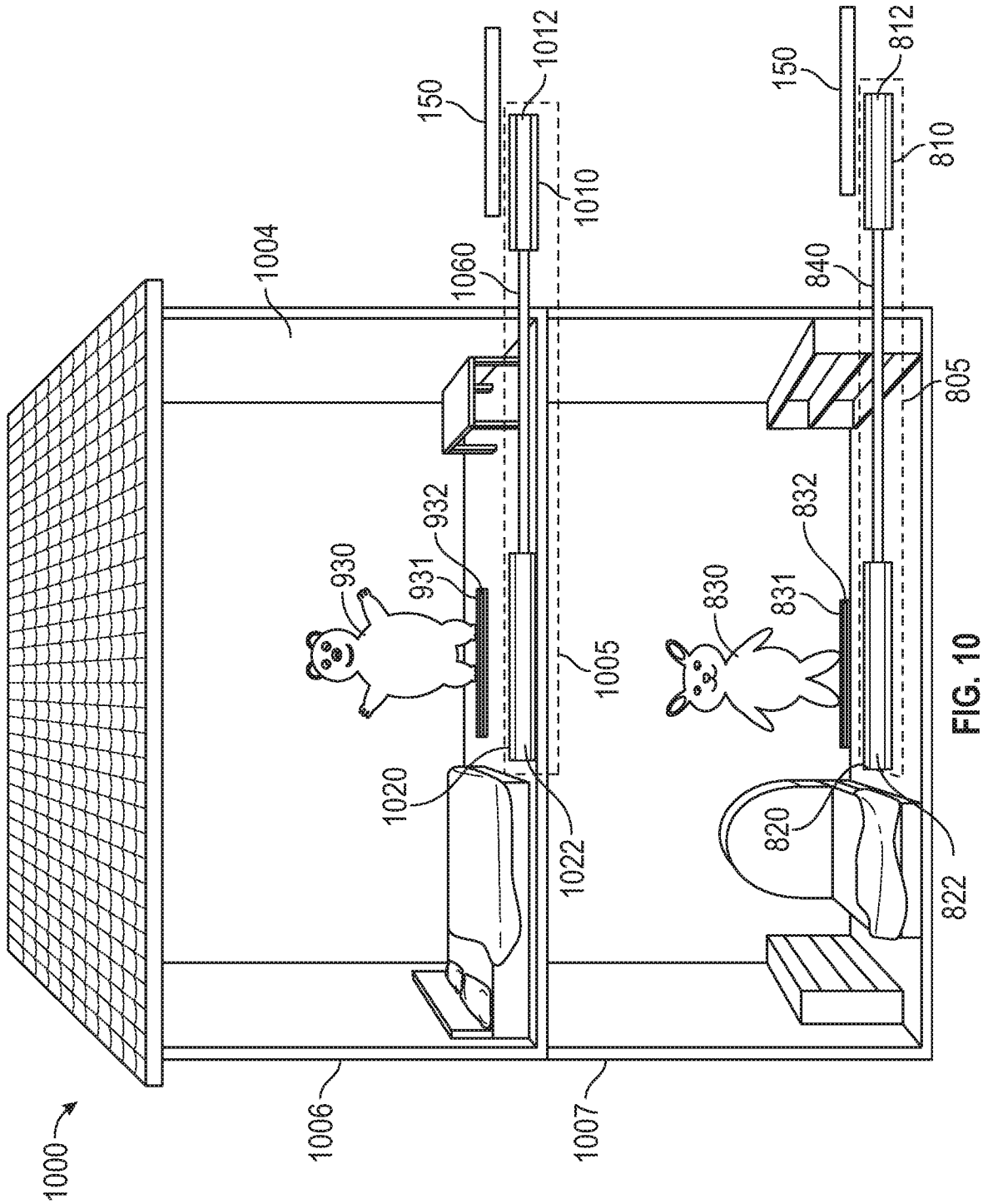
1000
1004
1005
1006
1007
1010
1012
1020
1022
1060
150
150
810
812
820
822
830
831
832
840
805
930
931
932

FIG. 10

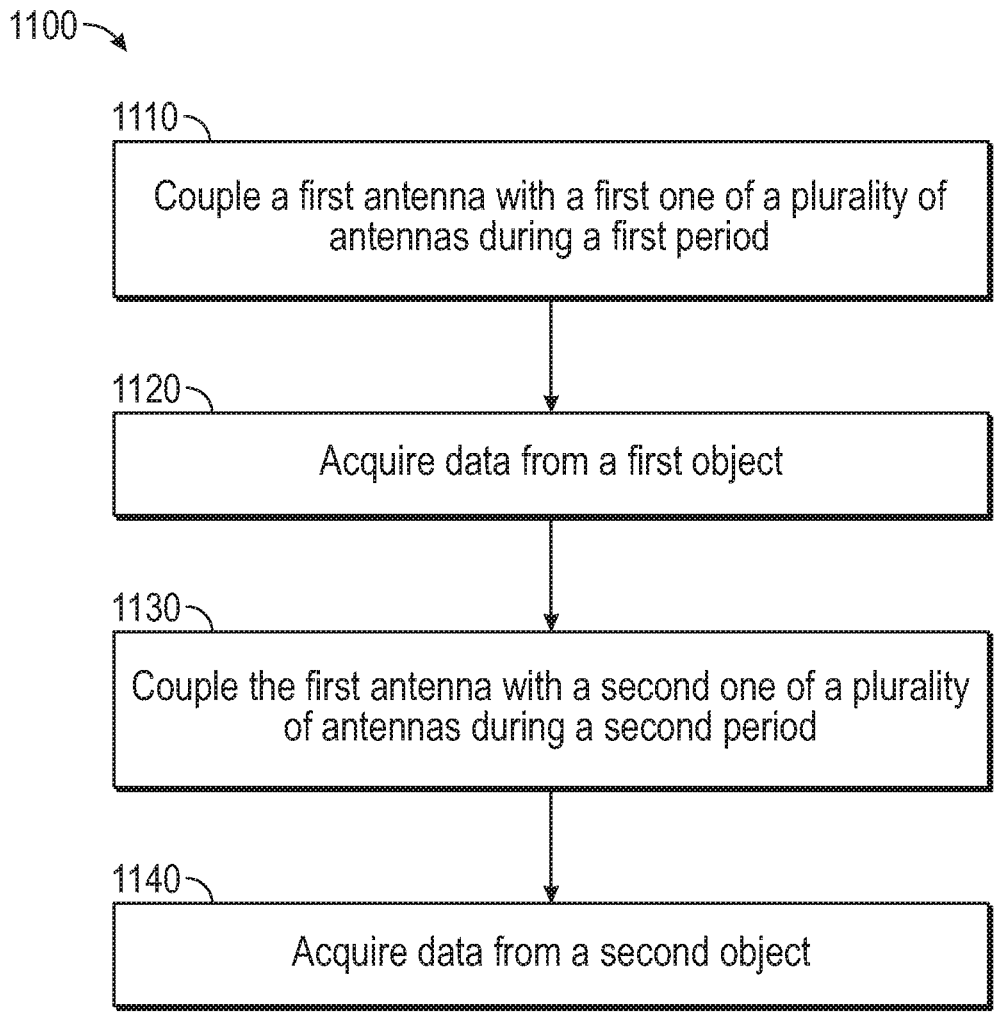
1100
1110
Couple a first antenna with a first one of a plurality of antennas during a first period
1120
Acquire data from a first object
1130
Couple the first antenna with a second one of a plurality of antennas during a second period
1140
Acquire data from a second object

FIG. 11

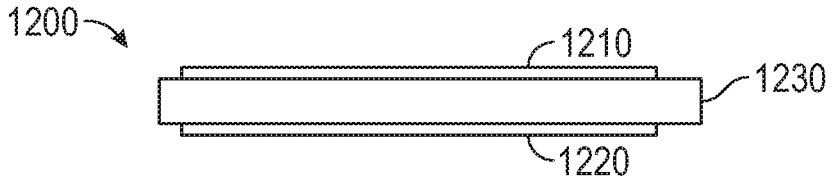
1200
1210
1230
1220

FIG. 12

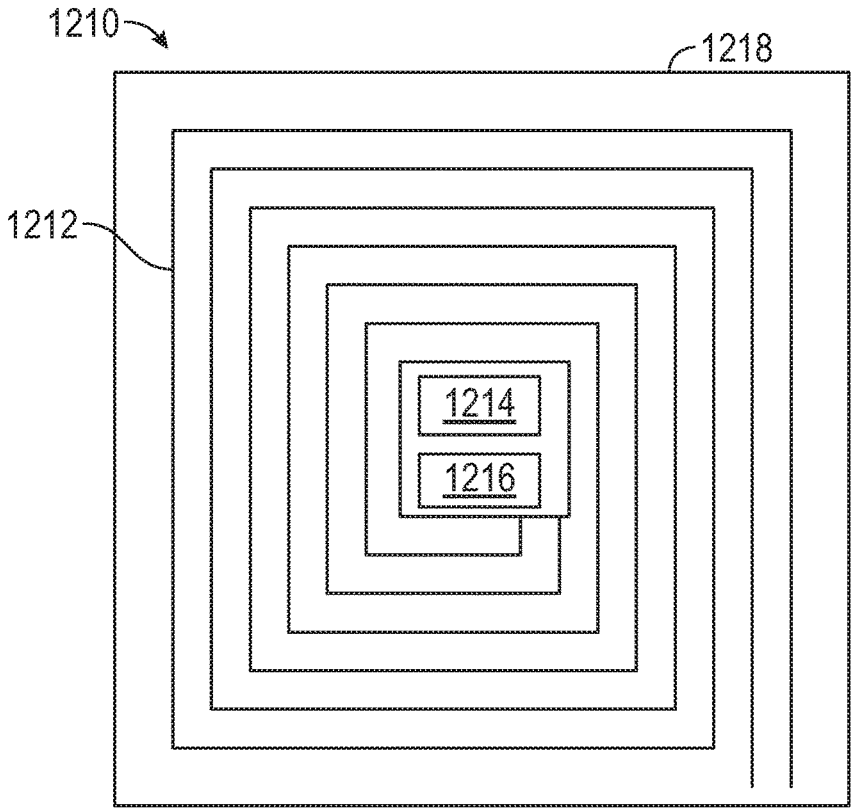

FIG. 13A

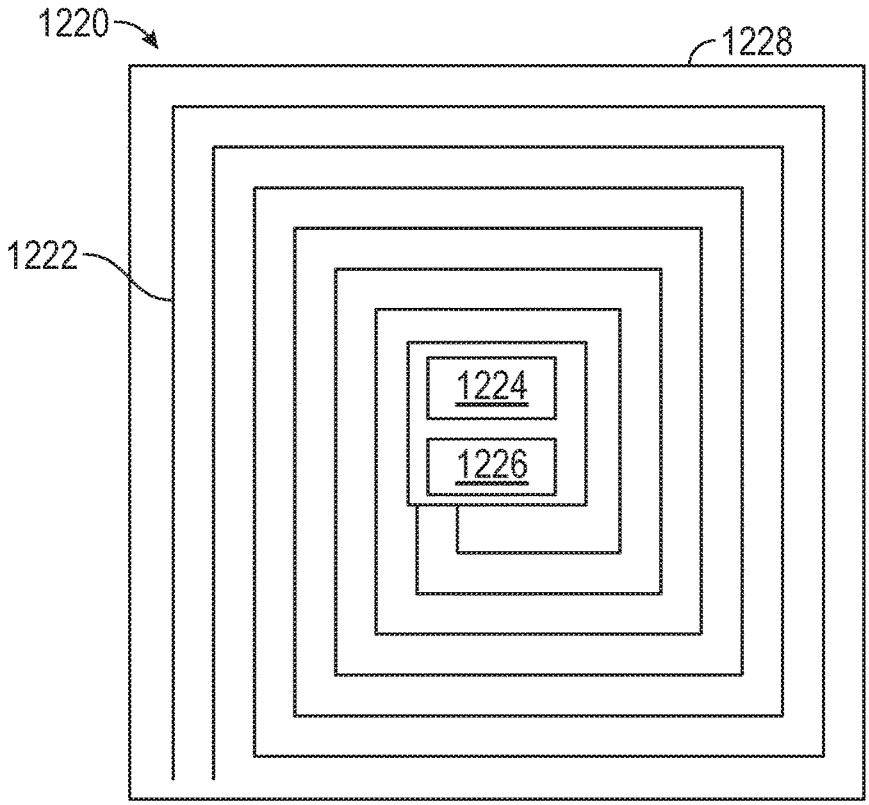

FIG. 13B

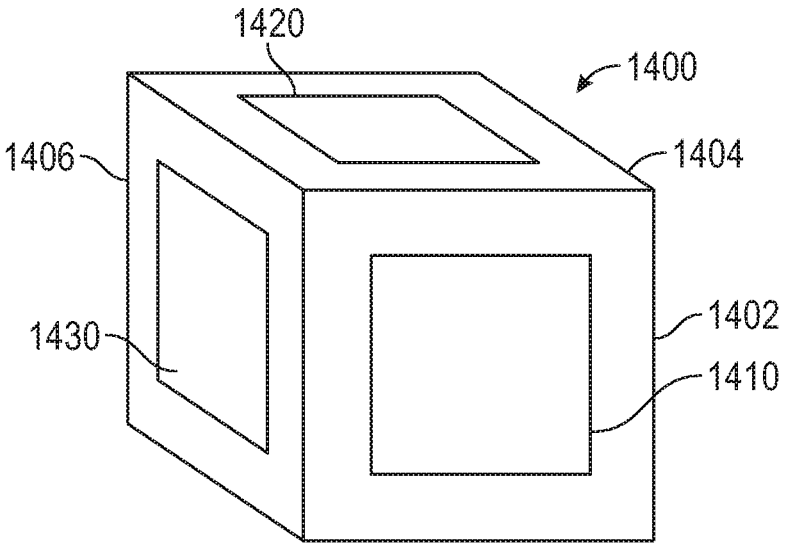
1420
1400
1406
1404
1430
1402
1410

FIG. 14

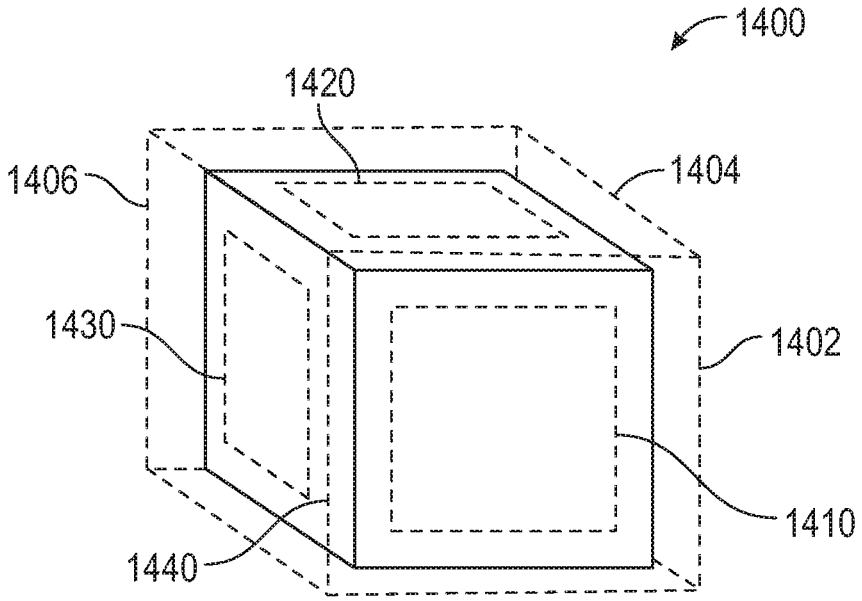
1400
1420
1406
1404
1430
1402
1410
1440

FIG. 15

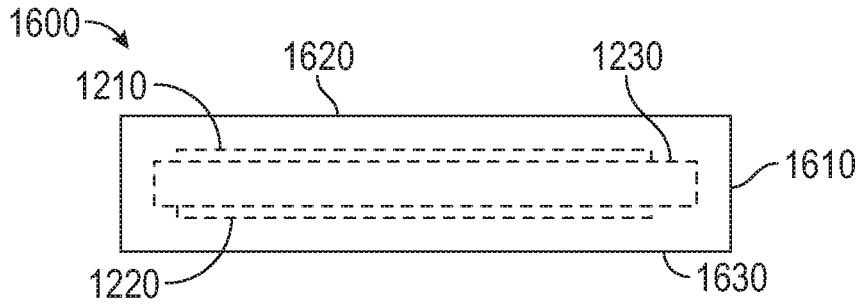
1600
1620
1230
1210
1610
1220
1630

FIG. 16

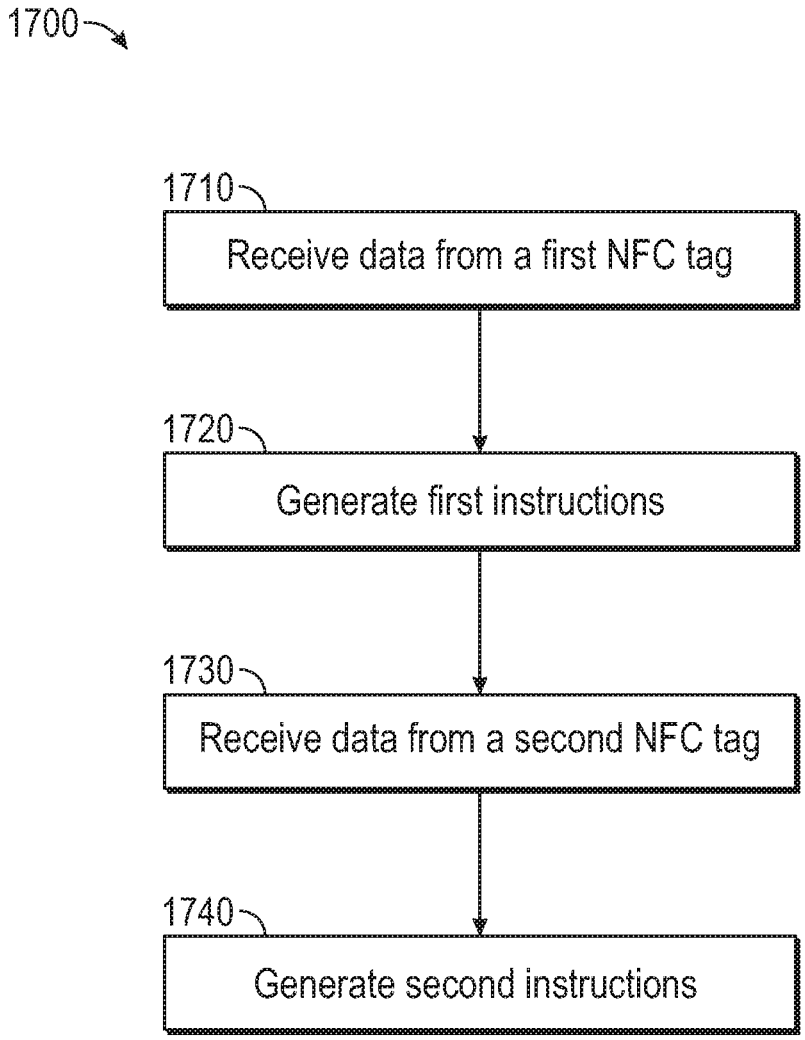
1700
1710
Receive data from a first NFC tag
1720
Generate first instructions
1730
Receive data from a second NFC tag
1740
Generate second instructions

FIG. 17

NEAR FIELD COMMUNICATION ANTENNA SYSTEM FOR A PLAYSET

BACKGROUND

[0001] Playsets having interactive features provide a user with an enhanced user experience. For example, playsets may include video and/or and sound playback features that may be triggered based on a user's actions. A user may insert an object (e.g., a play piece or game piece) within a playset and the playset may initiate video playback and/or sound playback in response. In current implementations, the antenna systems of playsets have limited communication distances. Accordingly, to interact with objects in different rooms of a playset, a user is required to move a mobile device from room to room, positioning the mobile device proximate to each object. Thus, the user experience of such playsets is reduced.

[0002] Thus, there is a need for improved near field communication antenna system for communicating with a playset.

SUMMARY

[0003] In one embodiment, a near field communication extending system for a playset comprises a main antenna and a plurality of extending antennas. The main antenna is positioned at a first location of the playset and configured to wirelessly communicate to a near field communication device of a mobile device. The plurality of extending antennas is positioned at a plurality of different locations within the playset. The near field communication extending system further comprising an antenna switching mechanism coupled to the plurality of extending antennas via a plurality of connection elements. The antenna switching mechanism is configured to switchably couple the main antenna with each of the plurality of extending antennas.

[0004] In one embodiment, a playset comprises a near field communication extending system. The near field communication extending comprises a main antenna and a plurality of extending antennas. The main antenna is positioned at a first location of the playset and configured to wirelessly communicate to a near field communication device of a mobile device. The plurality of extending antennas is positioned at a plurality of different locations in an interior of the playset. The near field communication extending system further comprising an antenna switching mechanism coupled to the plurality of extending antennas via a plurality of connection elements. The antenna switching mechanism is configured to switchably couple the main antenna with each of the plurality of extending antennas.

[0005] In one embodiment, a near field communication (NFC) device comprises a first NFC tag having a first antenna coupled to a first memory, a second NFC tag having a second antenna coupled to a second memory, and a first shield disposed between the first and second NFC tags. The first shield comprises a ferrite material and bounds each side of the first antenna and each side of the second antenna.

BRIEF DESCRIPTION OF THE DRAWINGS

[0006] So that the manner in which the above recited aspects are attained and can be understood in detail, a more particular description of embodiments described herein, briefly summarized above, may be had by reference to the appended drawings.

[0007] It is to be noted, however, that the appended drawings illustrate typical embodiments and are therefore not to be considered limiting; other equally effective embodiments are contemplated.

[0008] FIGS. **1**A and **1**B are illustrations of a playset, according to one or more embodiments.

[0009] FIG. **2**A is an illustration of an interior of a playset, according to one or more embodiments.

[0010] FIG. **2**B depicts a virtual presentation, according to one or more embodiments.

[0011] FIG. **3** is a schematic block diagram of a mobile device, according to one or more embodiments.

[0012] FIGS. **4** and **5** are illustrations of a playset, according to one or more embodiments.

[0013] FIGS. **6**A, **6**B, and **6**C are illustrations of a playset, according to one or more embodiments.

[0014] FIG. **7** is a flowchart for a method for interacting with a playset, according to one or more embodiments.

[0015] FIGS. **8**, **9**, and **10** are illustrations of playsets, according to one or more embodiments.

[0016] FIG. **11** is a flowchart for a method for interacting with a playset, according to one or more embodiments.

[0017] FIGS. **12**, **13**A, **13**B, **14**, **15**, and **16** are illustrations of a NFC device, according to one or more embodiments.

[0018] FIG. **17** is a flowchart for a method for interacting with a playset, according to one or more embodiments.

DETAILED DESCRIPTION

[0019] Interactive playsets provide a user an improved user experience as compared to playsets that do not include interactive capabilities. However, current interactive playsets have limitations that negatively impact the user experience such as limited video or sound playback options and frequent charging or replacement of batteries. In the following description, an improved playset and method for interacting with a playset is described where a mobile device is used in the interaction of the playset, providing the interactive features to the playset. Accordingly, the interactive features of the playset are increased from those using other designs. Further, as the playset no longer provides the interactive elements, batteries may be omitted from the playset, decreasing the cost of the playset.

[0020] FIG. **1**A illustrates a playset **100**, according to one or more embodiments. The playset **100** may have various different forms and/or sizes. For example, as illustrated by FIG. **1**A, the playset **100** is in the shape of a house. However, in other embodiments, the playset **100** may be a castle, a store, a restaurant, an attraction, a place of interest, and a garage, among others. The playset **100** includes a structure **102** that includes walls **105** and roof **106**, which collectively form one or more interior rooms (not shown). Further, the housing includes a plurality of openings, e.g., openings **110** and **120**. In other embodiments, the playset **100** may include more or less walls than illustrated in FIG. **1**A. Further, in one or more embodiments, the roof **106** may have a different shape and/or include additional features (e.g., spires, towers, or the like).

[0021] The openings **110** and **120** provide access to an interior (e.g., an interior region) **104** of the playset **100**. The opening **110** is located within the roof **106** and is sized to allow at least a portion of a mobile device, e.g., the mobile device **150**, to be exposed to the interior of the playset **100**. For example, the opening **110** may be sized such that a sensor of a mobile device is exposed to and able to access

the interior of the playset **100**. FIG. **1**B illustrates the mobile device **150** mounted to the roof **106** and over the opening **110**.

[0022] The playset **100** may include a support element **112**. The support element **112** may be positioned on the roof **106** around one or more sides of the opening **110**. Further, the support element **112** may include one or more support elements configured to maintain the position of the mobile device **150** over the opening **110**. For example, the mobile device **150** may rest on the support element **112** (e.g., a ledge or holder in which a bottom portion of the mobile device **150** is inserted) such that the mobile device **150** is positioned over the opening **110**. When positioned over the opening **110**, one or more sensors of the mobile device **150** may be able to interact with (e.g., image, scan, or the like) objects of the interior **104**. In one embodiment, the length and/or width of the opening **110** is smaller than the length and width of the mobile device **150** so that the mobile device **150** does not fall into the interior of the structure **102**.

[0023] In various embodiments, the opening **110** and the support element **112** may be positioned along more of the walls **105** instead of the roof **106**.

[0024] The opening **120** provides access to the interior **104**. For example, one or more objects or toys (e.g., the object **130**) may be positioned within or removed from the interior **104** through the opening **120**. The opening **120** may be a door, window, or another type of opening. In various embodiments, the playset **100** includes three or more openings. For example, the playset **100** includes the openings **110**, **120** and one or more additional openings. The additional openings may be located within the walls **105** and/or the roof **106**.

[0025] The playset **100** may additionally include an identification tag **107**. The identification tag **107** may be a near-field communication (NFC) tag. The NFC tag may also be a radio-frequency identification (RFID) tag or a Bluetooth low energy (BLE) tag, among others. The identification tag **107** may be a passive device, and thus, not powered by batteries. Alternatively, the identification tag **107** may be an active device powered by a power supply (e.g., one or more batteries or wirelessly acquired) of the structure **102**. In one or more embodiments, the identification tag **107** communicates with the mobile device **150**. For example, the identification tag **107** may communicate data corresponding to the playset **100** to the mobile device **150**. In other embodiments, the identification tag **107** may be a barcode, QRcode (e.g., a multi-dimensional barcode), glyph, etc. readable by the mobile device **150**.

[0026] The mobile device **150** may be a mobile phone or a tablet, among others. In one embodiment, as illustrated in FIG. **3**, the mobile device **150** comprises a display **152** configured to present a virtual presentation of the interior **104**. The virtual presentation may be an augmented version of the interior **104**. For example, the virtual presentation may include a combination of physical objects and features actually in the interior **104** and details and/or elements not present within the interior **104**. The latter details and elements being virtual augmentations to the virtual presentation. Further, the virtual presentation may correspond to the type of the playset. For example, if the type of the playset is determined to be a castle, the virtual presentation may depict an interior of a castle.

[0027] FIG. **2**A illustrates the interior **104** of the playset **100**, according to one or more embodiments. As illustrated, the walls **105** and the roof **106** have been made transparent such that a view of the interior **104** is unobstructed to visual inspection from the exterior. Further, in the embodiment of FIG. **2**A, the object **130** is positioned within the interior **104**. Additionally, objects **131** and **132** are positioned within the interior **104**. The object **130** may include identification tag **230**, the object **131** may include the identification tag **231**, and the object **132** may include the identification tag **232**. Alternatively, one or more of the objects **130**, **131**, and **132** may omit a corresponding identification tag. Further, one or more of the identification tags **230**, **231**, and **232** may be NFC tags. For example, the identification tags **230**, **231**, and **232** may be one of an RFID tag, and a BLE tag, among others. In other embodiments, one or more of the identification tags **230**, **231** and **232** may include a barcode, QRcode, or glyph, among others. While in the embodiment of FIG. **2**A, three objects are included within the interior **104**, in other embodiments, more than three objects or less than three objects may be included within the interior **104**. Further, in one or more embodiments, the objects **131** and **132** may comprise a substantially similar shape (e.g., a cube). However, in other embodiments, the objects **131** and **132** may differ in shape. Further, the size of the objects **131** and **132** may differ or be the same.

[0028] In one embodiment, the identification tags **230**, **231**, and **232** include identification information of the objects **130**, **131**, and **132**, respectively. The information may be utilized by the mobile device **150** to select and/or generate a virtual presentation. In one or more embodiments, one or more of the objects **131** and **132** may have a shape, size and/or element that may be identified by the mobile device **150** and utilized by the mobile device **150** to select and/or generate a virtual presentation to be displayed by the display **152** of the mobile device **150**.

[0029] The playset **100** may additionally include identification tag **240**. The identification tag **240** may be utilized by the mobile device **150** to select and/or generate a virtual presentation to be displayed by the display **152** of the mobile device **150**. For example, the identification tag **240** may have one or of a size, shape, and or element that may be identified by the mobile device **150** and utilized to select a virtual presentation to be displayed. In various embodiments, the playset **100** may include more than one identification tag **240**.

[0030] FIG. **2**B illustrates virtual presentation **200**, according to one or more embodiments. The virtual presentation **200** is displayed on the display **152** based on the data acquired by the mobile device **150**. Further, the virtual presentation **200** may be displayed on the display **152** of the mobile device **150** while the mobile device **150** is mounted to the roof **106** of the playset **100**, as illustrated in FIG. **2**B. The virtual presentation **200** comprises virtual content. For example, the virtual presentation **200** may comprise virtual objects **212**, **261**, and **262**. Further, the virtual presentation **200** is an augmented view of the interior **104** of the playset **100**. For example, in response to determining the playset **100** corresponds to a castle, a virtual presentation **200** of an interior view of a castle is displayed. The objects **130**, **131**, **132** in FIG. **2**A may also be represented within the virtual presentation **200** by virtual objects **212**, **261**, **262**, respectively. That is, the objects **130**, **131**, and **132** are presented with augmented features. For example, in the virtual presentation **200**, the physical object **130** is displayed as including elements **212***a*-**212***c* to form a virtual version (e.g.,

virtual object **212**) of the physical object **130**. Further, the objects **131** and **132** are displayed as virtual objects (elements) **261**, **262**, respectively, within the virtual presentation **200**. In one embodiment, the virtual objects **261** and **262** have a different shape and/or color from the objects **131**, **132**. For example, the virtual object **261** is depicted as a chair while the physical object **131** is a cube. Further, the virtual object **262** is depicted as a table while the physical object **132** is a cube. Depending on the selected virtual presentation, objects **131** and **132** may be presented differently. The number of objects within the virtual presentation **200** may correspond to the number of objects within the interior **104**. Additionally, the location of the objects within the virtual presentation **200** may correspond to the location of corresponding objects within the interior **104**. The location of the objects within the interior **104** may be determined by the mobile device **150** based on sensor data received from one of the sensors **154**.

[0031] In one or more embodiments, the virtual presentation **200** may additionally include a virtual fireplace **220** having a virtual burning fire. For example, one or more of the objects of the playset **100** may be a fireplace. The mobile device **150** may determine that the sensor data received from an object of the playset **100** identifies a fireplace. Accordingly, a virtual presentation comprising a fireplace having a burning fire based on sensor data may be selected and displayed by the display **152** of the mobile device **150**. Similarly, virtual presentations having other virtual objects with motion may be selected based on data acquired by the mobile device **150**. For example, a virtual presentation comprising virtual content including flowing water may be selected when one or more of the objects of the playset **100** is identified as including or corresponding to a water feature (e.g., a fountain, a stream, or the like).

[0032] The virtual presentation **200** simulates a view of the interior of the playset **100** that includes physical objects with added augmented reality (AR) features or a view made completely from virtual reality (VR) elements that may not look like the physical objects (e.g., objects **130**, **130**, and/or **132**) within the playset **100**. Thus, the mobile device **150** can provide a very different view of the interior of the playset **100** relative to when the mobile device **150** is not placed in the opening **110**. Further, leveraging the memory **157** and display **152** of the mobile device **150** enhances the user experience with the playset **100** without adding additional cost to the playset **100**.

[0033] FIG. **3** illustrates a schematic block diagram of the mobile device **150**, according to one or more embodiment. The mobile device **150** may include one or more sensors **154**. The sensors **154** may include one or more of an NFC device **155**, a camera **156***a*, and a camera **156***b*. The NFC device **155** may also be a RFID device, or a BLE device, among others. Further, the NFC device **155** may include a reader configured to acquire information from an NFC object or element. In embodiments where the NFC device **155** is an RFID device, the NFC device **155** includes an antenna. In one embodiment, the NFC device **155** is a barcode reader. In one or more embodiments, the mobile device **150** includes more than one NFC device **155**.

[0034] The mobile device **150** further includes a controller **153**. The controller **153** may be any general purpose processor. For example, the controller **153** may be a central processing unit (CPU) of the mobile device **150**. Further, the mobile device **150** may include memory **157**. The controller **153** may be communicatively coupled with the memory **157**. The memory **157** may be a computer readable storage medium. The memory **157** may store a plurality of virtual presentations **158** that are selected by the controller **153**. Further, the memory **157** may store a computer vision system **159** configured to identify one or more physical objects and/or features of physical objects from sensor data acquired by one or more of the cameras **156***a*, **156***b*. For example, the computer vision system **159** may receive data received from one or more of the sensors, process the data to detect one or more possible objects, and compare the possible objects to example data to determine whether or not the possible objects are actual objects and/r to identify the object.

[0035] The mobile device **150** may additionally include an input device **160**. The input device **160** may be a touch sensor (touch interface), a mouse, or keyboard, among others. The input device **160** receives input provided by a user which may be used by the controller **153** to augment the virtual presentation displayed on the display **152**. For example, the input device **160** may be a touch sensor that acquires input data (e.g., location and/or movement data) for one or more input objects (e.g., a user's digits or a stylus) and based on the input data, the virtual presentation (e.g., the virtual presentation **200**) may be altered. Altering the virtual presentation may comprise one or more of enlarging a portion of a virtual presentation, minimizing a portion of a virtual presentation, altering a position of a virtual representation of an object, e.g., the virtual object **212**, and imparting motion on a virtual representation of an object. In one or more embodiments, a video file and/or a sound file may be played based on input data received by the input device **160**.

[0036] The computer readable storage medium may be, for example, but is not limited to, an electronic storage device, a magnetic storage device, an optical storage device, an electromagnetic storage device, a semiconductor storage device, or any suitable combination of the foregoing. A non-exhaustive list of more specific examples of the computer readable storage medium includes the following: a portable computer diskette, a hard disk, a random access memory (RAM), a read-only memory (ROM), an erasable programmable read-only memory (EPROM or Flash memory), a static random access memory (SRAM), a portable compact disc read-only memory (CD-ROM), a digital versatile disk (DVD), a memory stick, or a floppy disk, among others. The memory **157** retains and stores instructions executable by the controller **153**. Additionally, one or more applications may be stored within the memory **157**. The applications may be executable by the controller **153**.

[0037] In various embodiments, the sensors **154** may be utilized to scan or image the interior **104** acquire data corresponding to the playset **100** and/or one or more objects within the interior **104**. The mobile device **150** may determine a type of playset based acquired data. Further, the mobile device **150** generates a virtual presentation of the playset **100** based on the acquired data.

[0038] FIG. **4** illustrates a front view of a playset **400**, according to one or more embodiments. The playset **400** may have various different forms and/or sizes like the playset **100** described in FIG. **1**A. The playset **400** includes structure **402**. The structure **402** includes surfaces **404***a*, **404***b*, and **404***c*. The surface **404***b* includes opening **410** and the surface **404***a* includes a window **406**. The opening **410**

is sized so that the display **152** of the mobile device **150** is viewable through the window **406**. The mobile device **150** generates a virtual presentation of the object **130** and/or other objects of within the playset **400** based on data acquired by a sensor of the mobile device **150**. As described with regard to FIGS. **1**, **2**A, and **2**B, the virtual presentation may include an augmented version of an object or objects within the playset **400**. The virtual presentation simulates a view of the interior region of the playset **400** that includes physical objects with added AR features or a view made completely from VR elements that do not look like the physical objects within the playset **400**. Thus, the mobile device **150** can provide a very different view of the interior of the playset **400** relative to what a viewer sees when the mobile device **150** is not placed in the opening **410**. Accordingly, the user experience with the playset **400** is enhanced by leveraging the memory **157** and display **152** of the mobile device **150** without adding additional cost to the playset **400** (e.g., without adding a display and memory for presenting the virtual presentation).

[0039] In one or more embodiment, the input device **160** of the mobile device **150** acquires input data which may be used by the controller **153** to augment the virtual presentation displayed on the display **152** of the mobile device **150**. For example, a user may interact with the input device **160** of the mobile device **150** via the window **406**.

[0040] FIG. **5** illustrates a rear view of the playset **400**, according to one or more embodiments. As illustrated, the playset **400** includes opening **420**. The opening **420** provides access to the interior **405** of the structure **402**. For example, the object **130** may be inserted into the interior **405** via the opening **420**. Further, objects **430** and **431** may be inserted into the interior **405** via the opening **420**. In one embodiment, the objects **430** and **431** may be mounted on a door **440** of the structure **402**. The objects **430** and **432** may include identification tags **431** and **433**. The identification tags may be configured similar to that of the identification tags **231** and **232**. In one embodiment, one or more of the objects **430** and **432** may omit the identification tags **431** and **433**, respectively. Further, the identification tags **431** and **433** may contain identification information corresponding to the objects **430** and **432**, respectively, which may be utilized by the mobile device **150** to identify the objects **430** and **432** and/or generate a virtual presentation. The playset **400** may additionally include the identification tag **407**. The identification tag **407** may be configured similar to that of the identification tag **107**. Further, the identification tag **407** may be utilized by the mobile device **150** to determine the type of the playset **400** and/or generate the virtual presentation. In various embodiments, the playset **400** may include more than one identification tag **407**.

[0041] In one or more embodiments, the mobile device **150** displays a virtual presentation based on the object **130**, and **430**, and **432**. The virtual presentation displayed on the display **152** of the mobile device **150** is viewable through the window **406**. In one or more embodiments, the virtual presentation includes an augmented version of object **130**. The augmented version of object **130** may be generated based on data received from one or more of the identification tags **407**, **431**, and **432**. For example, the virtual presentation may include virtual content corresponding to the object **130** and one or more of the objects **430** and **432**.

[0042] FIG. **6**A illustrates playset **600** and objects **602**. The playset **600** may be configured similar to that of the playset **400**. Further, the virtual presentation **604** displayed on the display **152** may correspond to one or more of the type of the playset **600** and data received from the objects **602**. For example, the type of the playset **600** may be determined to be a boutique. The type of playset **600** may be determined based on data acquired from the objects **602** and/or an identification tag of the playset **600**. The objects **602** may include clothes and other objects that when identified by a mobile device (e.g., the mobile device **150**) may alter the appearance of the object within a virtual presentation **604**. For example, the virtual presentation **604** may include an augmented view of the object **602***a* based on one or more of the objects **602***b*. In the illustrated embodiment, the object **602***a* is shown as wearing one or more of the objects **602***b*.

[0043] FIG. **6**B illustrates playset **610** and objects **612**. The playset **610** may be configured similar to that of the playset **400**. Further, the virtual presentation **614** displayed on the display **152** may correspond to one or more of the type of the playset **610** and data received from the objects **612**. For example, the type of the playset **610** may be determined to be a bakery. The type of playset **600** may be determined based on data acquired from the objects **612** and/or an identification tag of the playset **610**. The virtual presentation **614** may include an augmented view of one or more of the objects **612**. Alternatively, the virtual presentation **614** may include an object generated based on data received corresponding to the objects **612**. For example, the virtual presentation **614** includes a cake generated in response to the objects **612** being identified as ingredients corresponding to the cake. In or more embodiments, a user may collect objects corresponding to the ingredients of a cake. The ingredients may be part of a recipe. The user may place the objects within the structure of a playset (e.g., the playset **400**) to be identified by a mobile device (e.g., the mobile device **150**). In response, the mobile device **150** may display a virtual presentation including virtual content corresponding to the objects.

[0044] FIG. **6**C illustrates playset **620** and objects **622**. The playset **620** may be configured similar to that of the playset **400**. The virtual presentation **624** may be generated based on data corresponding to the playset **620** and/or the objects **622**. For example, the data corresponding to the playset **620**, the objects **622** and/or an identification tag of the playset **610** may be utilized by the mobile device **150** to identify the type of the playset **620** as being an aquarium. Accordingly, a corresponding virtual presentation **624** is displayed by the mobile device **150**. In one embodiment, the virtual presentation **624** includes a virtual presentation of object **622***a* augmented by one or more of the objects **622***b*. For example, the virtual presentation **624** may include a presentation of the object **622***a* augmented to include one or more of the objects **622***b*. In one embodiment, the presentation of the object **622***a* may be augmented to be wearing one or more of the objects **622***b* and/or interacting with one or more of the objects **622***b*. In or more embodiments, the objects **622***b* are accessories for object **622***a*. A user may place the objects **622** within the structure of a playset (e.g., the playset **400**) to be identified by a mobile device (e.g., the mobile device **150**). In response, the mobile device **150** may display a virtual presentation including virtual content corresponding to a virtualized version of the object **622***a* wearing the objects **622***b*.

[0045] One or more of the virtual presentations **604**, **614**, and **624** may be changed by changing one or more of the objects **602**, **612**, and **622**, respectively. For example, the presentation of the object **602***a* within virtual presentation **604** may be altered in response to detection that one or more of the objects **602***b* was changed. In one embodiment, with reference to FIG. **6**C, switching one or more of the objects **622***b* with another object alters the virtual appearance of the object **622***a* within the virtual presentation **624**. Further, one or more of the virtual presentations **604**, **614**, and **624** may be altered based on input received by the input device **160** of the mobile device **150**. For example, the position and/or orientation of a virtual object within a virtual presentation (e.g., the virtual presentations **604**, **614**, and **624**) may be altered based on input received by the input device **160**. In one or more embodiments, a video file and/or a sound file may be played based on an input received by the input device **160**.

[0046] In the embodiments of FIGS. **6**A-**6**C, the housing of the playset (e.g., the structure **402** of the playset **400** of FIG. **4**), may include one or more features corresponding to the type of the playset. For example, the housing may include a sign, illustration, and/or shape that correspond to the type of the playset that further enhances the user experience by further immersing a user within the corresponding virtual presentation.

[0047] FIG. **7** is a flowchart illustrating a method **700** for interacting with a playset, according to one or more embodiments. At operation **710**, the mobile device **150** acquires data corresponding to a playset (e.g., the playset **100**, **400**). The controller **153** instructs one or more of the sensors to acquire data from the playset. In one or more embodiments, a user may provide instructions to acquire sensor data via an application running on the mobile device **150** and the input device **160**.

[0048] At operation **712**, an identification tag of a playset (e.g., the identification tag **107** of playset **100** or the identification tag **407** of playset **400**) is read. With regard to FIG. **1**A, the NFC device **155** of the mobile device **150** communicates with the identification tag **107** to acquire data corresponding to the playset **100**. In one embodiment, the identification tag **107** is an NFC tag read by the NFC device **155** of the mobile device **150**. For example, the identification tag **107** may be a passive NFC tag, and an antenna of the identification tag **107** is powered by a power signal provided by one or more antennas of the NFC device **155** through a wireless coupling. The power signal provides radio energy to the identification tag **107** to power a processor of the identification tag **107**. In response to the power signal, the processor of the identification tag **107** is powered and data stored by a memory of the identification tag **107** may be accessed by the processor and wirelessly provided to an antenna of the NFC device **155** in the mobile device **150**. In another embodiment, the identification tag **107** is an active tag having a local power source. In such an embodiment, when the NFC device **155** is positioned proximate the identification tag **107**, an antenna of the NFC device **155** couples with an antenna of the identification tag **107** and a processor of the identification tag wirelessly communicates data from a memory of the identification tag to the NFC device **155**. While the above discussion is directed to the identification tag **107** and the playset **100**, a similar description may be applied to the identification tag **407** and the playset **400**.

[0049] In one or more embodiments, one or more of the identification tags **107** and **407** is a BLE tag and includes a BLE transceiver. In such an embodiment, the BLE transceiver wirelessly communicates with the NFC device **155** of mobile device **150** to communicate data regarding the playset (e.g., the playset **100**, **400**) from the identification tag.

[0050] In other embodiments, one or more of the identification tags **107** and **407** includes a barcode, QRcode, or a glyph, among others, and the camera **156***a* may be configured to image the barcode, QRcode, or glyph such that the mobile device **150** obtains data corresponding to the playset **100** and **400**, respectively.

[0051] Further, in various embodiments, the computer vision system **159** may identify the identification tags **107** and **407**. For example, the computer vision system **159** receives acquired data from the camera **156***a* corresponding to the identification tags **107** and **407**, processes the acquired data to detect one or more possible objects, and compares the possible objects to templates to identify the identification tags **107** and **407**.

[0052] In various embodiments, acquiring data from a playset comprises operation **714**, reading an identification tag of one or more objects of the playset. For example, the NFC device **155** of the mobile device **150** communicates with one or more of the identification tag **230** of the object **130**, the identification tag **231** of the object **131**, the identification tag **232** of the object **132**, or the identification tag **240** of FIG. **2**A. Further, the NFC device **155** of the mobile device **150** communicates with one or more of the identification tag **230** of the object **130**, the identification tag **431** of the object **131**, and the identification tag **433** of the object **432**.

[0053] The mobile device **150** may receive data from one or more of the identification tags **230**, **231**, **232**, **240**, **431** and **433**. For example, in one embodiment, one or more of the identification tags **230**, **231**, **232**, **431** and **433** are passive NFC tags and the NFC device **155** of the mobile device **150** provides a power signal to one or more of the identification tags **230**, **231**, **232**, **240**, **431** and **433**. In response, a processor of each of the passive identification tags is powered and communicates data stored within a memory of the identification tags to the NFC device **155**. In another embodiment, one or more of the identification tags **230**, **231**, **232**, **240**, **431** and **433** are active NFC tags and the NFC device **155** of the mobile device **150** receives data from the one or more of the identification tags in response to an antenna of the NFC device **155** coupling to an antenna of the identification tags. Further, in other embodiments, one or more of the identification tags **230**, **231**, **232**, **240**, **431** and **433** are BLE devices and communicate information to the mobile device **150** via the NFC device **155**. In such an embodiment, the NFC device **155** may be a BLE device configured to receive data from the one or more of the identification tags **230**, **231**, **232**, **240**, **431** and **433**.

[0054] In one or more embodiments, acquiring data corresponding to a playset additionally, or alternatively, includes operation **716**. In operation **716**, the interior of the playset (e.g., interior **104** of the playset **100** or the interior **405** of the playset **400**) is imaged. With reference to FIG. **1**A, the mobile device **150** may image the interior **104** of the playset **100** utilizing the camera **156***a*. In one embodiment, imaging the interior **104** of the playset **100** acquires data corresponding to one or more of the playset **100**, the object **130**, the object **131** and the object **132**. Further, one or more

of the objects **130**, **131**, and **132** may include an identifying element that may be detected by the mobile device **150** when the interior **104** is imaged. The identifying elements may be imaged and utilized by of the mobile device **150** to identify a feature of the playset **100**. The identifying elements may be a barcode, QRcode, glyph, or the like. Further, the identifying elements may be a shape of an object, a size of an object, a color of an object, and/or a feature of the object.

[0055] In one or more embodiments, the mobile device **150** images the interior **405** of the playset **400** using, e.g., the camera **156***a*. In one embodiment, the mobile device **150** images the interior **405** of the playset **400** and acquires data corresponding to one or more of the object **130**, the object **430** and/or the object **432**. For example, one or more of the objects **130**, **430**, and **432** includes an identifying feature that may be imaged and identified by the mobile device **150**. The computer vision system **159** may receive the images and identify one or more of the objects **130**, **430**, and **432**. Further, the computer vision system **159** may detect identifying elements within of the objects **130**, **430**, and **432** which aid in the identification of the objects. For example, the identifying elements of the objects **130**, **430**, **432** may be a barcode, QRcode, or glyph, among others. Further, the identifying elements may be a shape of an object, a size of an object, a color of an object, and/or a feature of the object.

[0056] In other embodiments, mobile device **150** acquires data corresponding to the position of one or more of the object **130**, the object **131**, and the object **132** within the interior **104** via the camera **156**. Similarly, the mobile device **150** may acquire data corresponding to the position of one or more of the object **130**, the object **430**, and the object **432** within the interior **405** via the camera **156**.

[0057] In various embodiments, acquiring data corresponding to a playset includes one or more of operations **712-716**. For example, in one embodiment, acquiring data corresponding to a playset comprises at least two of the operations **712-716**. In other embodiments, acquiring data corresponding to a playset comprises each of the operations **712-716**.

[0058] At operation **720**, the controller **153** selects a virtual presentation from the virtual presentations **158** to be displayed on the display **152** of the mobile device **150**. For example, the controller **153** may select a virtual presentation based on the data acquired during one or more of operations **712-716**. In one embodiment, the controller **153** selects a virtual presentation from a list of virtual presentations stored within the memory **157** based on the data acquired during one or more of the operations **712-716**. In one or more embodiments, the virtual presentation corresponds to the type of a playset. For example, a type of the playset may be determined form the acquired data. Further, if the type of playset is determined to be a castle, the controller **153** selects a virtual presentation that corresponds to an interior of a castle (e.g., the virtual presentation **200** of FIG. **2**B).

[0059] In one or more embodiments, the virtual presentation comprises virtual content including a virtual object that is generated based on the data acquired during operations **712-716**. For example, with regard to FIGS. **2**A and **2**B, a virtual presentation of the object **130**, virtual object **212**, may include elements **212***a*-**212***c* within the virtual presentation **200**. Further, with reference to FIG. **6**B, the virtual presentation **614** may include a virtualized object (e.g., a virtualized cake) as the objects **612** are identified by the mobile device **150** as being elements corresponding to a cake.

[0060] In one embodiment, a plurality of virtual presentations is stored within the memory **157**. Further, the controller **153** selects a virtual presentation from the plurality of virtual presentations based on the acquired data. For example, the controller **153** may determine one or more features of the playset from the acquired data and compares the features to the plurality of virtual presentations to select a corresponding virtual presentation. The virtual presentations may each include a one or more attributes which may be compared against the determined features of the playset to determine a virtual presentation to select.

[0061] At operation **730**, the virtual presentation is displayed on the display on the display **152** of the mobile device **150**. For example, the virtual presentation selected during operation **720** is displayed on the display **152** of the mobile device **150**.

[0062] At operation **740**, the controller **153** updates the virtual presentation displayed on the display **152**. Updating the displayed virtual presentation includes determining one or changes to an object (e.g., the objects **130**, **131**, **132**, **430**, and **432**). For example, the mobile device **150** may detect the insertion, removal, and/or movement of an object relative to an interior (e.g., the interior **104**, **404**) of a playset (e.g., the playset **100**, **400**). In response to the detection of an insertion, removal and/or movement of an object relative to the interior the controller **153** updates the virtual presentation displayed on the display **152** of the mobile device **150**. For example, the virtual presentation may be updated to include a virtual presentation of an object inserted into the interior, omit a virtual presentation of an object removed from the interior, and/or move a virtual object when a position of an object is changed within the interior. In various embodiments, operation **740** is optional. For example, in one or more embodiments, the operation **740** may be omitted from the method **700**.

[0063] In one or more embodiments, the mobile device **150** uses the sensors **154** to detect change to an object within an interior of the playset. For example, the camera **156***a* may scan the interior of the playset at predefined intervals to detect insertion, removal and/or movement of an object within the interior. A predefined intervals may be once every M seconds or once every M milliseconds, where M is one or more.

[0064] The mobile device **150** updates the displayed virtual presentation on the display **152** in response to the insertion, removal, and/or movement of the object within the interior **104**. Further, the mobile device **150** may detect the removal of, insertion of, or movement of one or more of the objects **430** and **432** of FIG. **5**. For example, the mobile device **150** may update a virtual presentation to display an updated augmented view of the object **130** in response to the insertion of the object **430** into the interior **405** or the removal of the of the object **430**. For example, the presentation of the object **430** may be updated to include or omit the object **430** in response to insertion of the object **430** into the interior **405** or the removal of the of the object **430**, respectively.

[0065] In one embodiment, updating the displayed virtual presentation comprises displaying a movie or an image, among others. For example, the controller **153** may update a displayed virtual presentation to show a movie in response

to movement of the object **130** within interior **104**. For example, with reference to FIG. **2**, in response to the detection of the object **130** leaving the interior **104**, a video showing a corresponding virtual object is displayed on the display **152**.

[0066] In one or more embodiments, updating a virtual presentation includes determining the position of a user relative to the mobile device **150**. For example, the camera **156***b* may be utilized to acquire the position of a user relative to the mobile device **150**. Acquiring the position of a user may include acquiring the position between a user's eyes relative to the mobile device **150** and display **152**. In one embodiment, as a user moves in one or more of the X, Y, and Z direction relative to the mobile device **150**, the virtual presentation is adjusted in a corresponding way. For example, if a user moves in the positive Z direction, the virtual presentation may be shifted in a negative Z direction. The virtual presentation may also be shifted in correlation to the angle determined to be moved by the user. In other embodiments, determining the position of a user relative to the mobile device **150** comprises determining the position of a user's pupils. Further, as the user's pupils are to be moved, the movement may be detected by the camera **156***b* and the virtual presentation may be adjusted accordingly.

Near-Field Communication Extending System

[0067] Playsets incorporate NFC devices to enhance the user experience of the playset. For example, the NFC devices wirelessly communicate with a mobile device **150** to communicate data to the mobile device **150** and generate an interaction within the mobile device. However, the user experience of a playset including NFC devices is limited due to the limited wirelessly communication range of the NFC devices. For example, a user may be required to move a mobile device within a playset to interact with objects at different positions within the playset. However, the communication range may be increased by coupling each of the NFC devices to another NFC device (e.g., an NFC extender) which wirelessly communicates with the mobile device. For example, NFC devices typically have a communication range of about 10 cm, but that range may be increased by incorporating additional NFC devices that are coupled together. Accordingly, the user experience is improved as the user may communicate with different parts of the playset without having to move the mobile device around the playset.

[0068] FIG. **8** illustrates a playset **800**, according to one or more embodiments. For example, the playset **800** includes an NFC extending system **805**. In one or more embodiments, the NFC extending system **805** comprises a main antenna **812** and an extending antenna **822**. Further, the NFC extending system **805** includes connecting element **840** coupling the main antenna **812** with the extending antenna **822**. In other implementations, the main antenna **812** is also part of an NFC device **810** and the extending antenna **822** is part of an NFC device **820**. The connecting element **840** comprises one or more standard and/or impedance matched wires and/or cables. In various embodiments, as shown in FIG. **9**, an NFC extending system (e.g., NFC extending system **905**) may include two or more extending antennas (e.g., extending antennas **922***a* and **922***b*) coupled to a main antenna (e.g., the main antenna **912**) via an antenna switching mechanism (e.g., antenna switching mechanism **970**). Such an embodiment is described in greater detail with regard to FIG. **9**.

[0069] The extending antenna **822** is positioned within the interior **804** of the playset **800**. The main antenna **812** of the NFC extending system **805** is coupled to the extending antenna **822** via the connecting element **840**. The NFC extending system **805** allows a mobile device (e.g. the mobile device **150**) to communicate with an NFC device (e.g., the object **830**) that is outside the range of the mobile device **150**. Stated differently, the NFC extending system **805** allows a mobile device positioned external to the playset **800** to communicate with the object **830** via the antenna **832** of the NFC tag **831** located within the interior **804** of the playset **800** when the mobile device **150** would be otherwise be unable to communicate directly with the NFC device in the object **830**. Further, in embodiments where the NFC extending system is comprised of multiple extending antennas **822**, the NFC extending system allows a mobile device to communicate with multiple NFC devices located within the interior of a playset.

[0070] The main antenna **812** of the NFC extending system **805** is configured to couple with the NFC device **155** of the mobile device **150**. Further, the antenna **822** of the NFC extending system **805** is configured to communicate with an antenna (e.g., the antenna **832**) of an object (e.g., the object **830**) within the interior **804**.

[0071] The mobile device **150** may provide a power signal to the antenna **832** of the NFC tag **831** of the object **830** via the NFC extending system **805**. In response to the receipt of the power signal, a processor **833** of the object **830** access a memory **834** of the object **830** and communicates data corresponding to the object **830** to the NFC device **155** of the mobile device **150** via the antenna **832** and the NFC extending system **805**.

[0072] In various embodiments, the controller **153** of the mobile device **150** accesses the memory **157** of the mobile device **150** to generate a sound file to be played by the speaker **151** or to update an image or video displayed on the display **152** of the mobile device **150**. For example, the controller **153** may access a sound file from the memory **157** that corresponds to the object **830** and plays the sound file via the speaker **151**. The sound file may include music, speech, sounds, or the like. Further, the controller **153** may access a video file, image file, application object, or game object from the memory **157** that corresponds to the object **830** and updates the displays **152** accordingly. In one or more embodiments, the input device **160** may receive input data from a user that may be utilized by the controller **153** to alter a sound file playing by the mobile device **150**, a video playing on the mobile device **150**, and/or an image displayed by the mobile device **150**.

[0073] FIG. **9** illustrates playset **900** with multiple extending antennas, according to one or more embodiments. The playset **900** includes an interior **904**. Further, the playset **900** has rooms **906** and **907**. The playset **900** includes the NFC extending system **905**. The NFC extending system **905** is disposed within the interior **904** and in rooms **906** and **907**. The NFC extending system **905** includes the extending antennas **922***a* and **922***b* and is configured to communicatively couple with an object (e.g., the object **830** or **930**) via an antenna switching mechanism **970**. Further, the NFC extending system **905** includes connecting elements **940***a* and **940***b*. The connecting elements **940***a* and **940***b* may each

include one or more standard and or impedance matched wires and/or cables. Additionally, in other implementations, the extending antenna **922***a* is part of an NFC device **920***a* and the extending antenna **922***b* is part of an NFC device **920***b*.

[0074] The antenna switching mechanism **970** is coupled to the main antenna **812**. The antenna switching mechanism **970** may be wirelessly powered by the NFC device **155** of the mobile device **150**. Alternatively, the antenna switching mechanism **970** may be powered by a local power source (e.g., one or more batteries). In embodiments where the antenna switching mechanism **970** is wirelessly powered, the antenna switching mechanism **970** may be referred to as a wirelessly powered antenna switching mechanism. Further, in such embodiments, the antenna switching mechanism **970** wirelessly receives a power signal from the antenna of the NFC device **155** which powers the antenna switching mechanism **970**.

[0075] The antenna switching mechanism **970** may be disposed external to the playset **900** or internal to the playset **900** in the interior **904**. Further, each of the rooms **906** and **907** may have one or more NFC devices **920** and corresponding extending antennas **922**. For example, each of the rooms may have two or more extending antennas **922**.

[0076] The antenna switching mechanism **970** sequentially couples the main antenna **912** to each of the extending antennas (e.g., extending antennas **922***a* and **922***b*) of the NFC extending system **905**. For example, in a first state, the antenna switching mechanism **970** couples the main antenna **912** to the extending antenna **922***a* and decouples the extending antenna **922***b* from main antenna **912**. In a second state, the antenna switching mechanism **970** couples the main antenna **912** to the extending antenna **922***b* and decouples the extending antenna **922***a* from main antenna **912**.

[0077] As illustrated in FIG. **9**, in the first state, the antenna switching mechanism **970** couples the mobile device **150** to the object **830** via the extending antenna **922***a* of NFC extending system **905**. In one embodiment, in the first state, the mobile device **150** transmits a power signal through the NFC extending system **905** to the antenna **932** of the object **830** to power and communicate with the NFC tag **831** of the object **830**. Further, in the second state, the antenna switching mechanism **970** couples the mobile device **150** to the object **930**. Additionally, in the second state, the mobile device **150** transmits a power signal through the NFC extending system **905** to the antenna **932** of the object **930** to power and communicate with the NFC tag **931** of the object **930**.

[0078] The antenna switching mechanism **970** includes a control switching element **972**. The control switching element **972** may be wirelessly powered by a mobile device (e.g., the mobile device **150**) or powered by a local source (e.g., a battery). Further, the control switching element **972** may be powered the same way as the antenna switching mechanism **970**. The control switching element **972** controls the state of the antenna switching mechanism **970**. For example, the control switching element **972** controls whether the antenna switching mechanism **970** couples the main antenna **912** with the extending antenna **922***a* or **922***b*.

[0079] The control switching element **972** may be preprogrammed to periodically switch between the first and second states that connect extending antennas **922***a* and **922***b* respectively to the main antenna **912**. Alternatively, the control switching element **972** may be controlled by the mobile device **150**. For example, the mobile device **150** may transmit a power signal and control signal to the control switching element **972** to switch the antenna switching mechanism **970** between the first and second states. The timing of when the control switching element **972** changes the antenna switching mechanism **970** between states may correspond to a timing of when the power signal is provided by the mobile device **150**. For example, each time the control switching element **972** receives the power signal, the control switching element **972** switches the state of the antenna switching mechanism **970**. In embodiments where the antenna switching mechanism **970** can be coupled to two or more extending antennas and comprises two of more states, the control switching element **972** may switch the antenna switching mechanism **970** between each of the states of the antenna switching mechanism **970**.

[0080] In one or more embodiments, the control switching element **972** may switch the antenna switching mechanism **970** between each of the states of the antenna switching mechanism **970** at a first rate. For example, in embodiments where the antenna switching mechanism **970** comprises two states, the control switching element **972** switches the antenna switching mechanism **970** from the first state to the second state and from the second state to the first state at a first rate. In one or more embodiments, the control switching element **972** may switch the antenna switching mechanism **970** between each of the states of the antenna switching mechanism **970** using different rates. For example, the antenna switching mechanism **970** may be positioned in the first state for a first period of time and in the second state for a second period of time, where the first period time is equal to, longer than or shorter than the second period of time.

[0081] FIG. **10** illustrates a playset **1000**, according to one or more embodiments. The playset **1000** is configured similar to that of the playsets **800** and **900**. For example, the playset **1000** includes NFC extending systems **805** and **1005** that extend the NFC range of the mobile device **150**. The NFC extending system **1005** is configured similar to that of the NFC extending system **805**. For example, the NFC extending system **1005** includes extending antenna **1022**, main antenna **1012** and connecting element **1060**. The main antenna **1012** is coupled to the extending antenna **1022** via the connecting element **1060**. Further, the main antenna **1012** is disposed within a NFC device **1010** positioned external to the playset **1000** while the extending antenna **1022** is disposed within a NFC device **1020** disposed within room **1006** in the interior **1004** of the playset **1000**. Additionally, the connecting element **1060** is configured similar to that of the connection element **840**.

[0082] As compared to the embodiment of FIG. **9**, the embodiment of FIG. **10** may omit the antenna switching mechanism **970**. For example, in the embodiment of FIG. **10**, each of the extending antennas **822** and **1022** is coupled to a corresponding main antenna **812** and **1012**, respectively. As another example, each of the extending antennas **822** and **1022**, of the NFC devices **820** and **920**, respectively, are coupled to a corresponding main antenna **812** and **1012** of the NFC devices **810** and **1010**, respectively. In other embodiments, while each of the NFC extending systems **805** and **1005** are illustrated as comprising a single extending antenna (e.g., extending antennas **822** and **1022**, respectively), one or more of the NFC extending systems **805** and **1005** comprise multiple extending antennas. In such

embodiments, the NFC extending systems **805** and **1005** are configured similar to that of NFC extending system **905** and comprise an antenna switching mechanism coupled between the extending antennas and the corresponding main antenna.

[0083] The NFC extending systems **805** and **1005** wirelessly couple the mobile device **150** to the object **830**, and the object **930**, respectively. For example, the NFC device **155** of the mobile device **150** includes an antenna that couples to the main antenna **812**. In embodiments employing RFID technologies, the NFC device **155** transmits a power signal that is received by the main antenna **812** and transmitted to the antenna **822** via the connecting element **840**. The antenna **822** transmits the power signal to the antenna **832** of the object **830**. In response to the receipt of the power signal, a processor of the object **830** transmits information corresponding to the object **830** to the NFC device **155** of the mobile device **150** through NFC extending system **805**. Further, the NFC device **155** of the mobile device **150** includes an antenna that couples to the main antenna **1012** of the NFC extending system **1005**. In embodiments employing RFID technologies, the NFC device **155** transmits a power signal that is received by the main antenna **1012** and transmitted to the extending antenna **1022** via the connecting element **1060**. In response to the receipt of the power signal, a processor of the object **930** transmits information corresponding to the object **930** to the NFC device **155** through the NFC extending system **1005**.

[0084] In one or more embodiments, a first mobile device couples to the NFC extending system **805** during a first period and a second mobile device couples to the NFC extending system **1005** during a second period. The first and second periods at least partially overlap. Alternatively, the first and second periods are non-overlapping. Further, in another embodiment, during a first period the mobile device **150** couples to the NFC extending system **805** and during a second period the mobile device **150** couples to the NFC extending system **1005**.

[0085] Further, the NFC extending systems **805** and **1005** may be positioned within a common room. For example, while the extending antennas **822** and **1022** are illustrated as being positioned in different rooms (e.g., the rooms **1006** and **1007**) of the playset **1000**, the extending antennas **822** and **1022** may be disposed in a common room (e.g., either the room **1006** or **1007**). Additionally, or alternatively, one or more of the NFC extending systems **805** and **1005** may include an extending antenna positioned in a first room (e.g., the room **1006**) and an extending antenna positioned in a second room (e.g., the room **1007**). In such embodiments, one or more of the NFC extending system **805** and **1005** may be configured similar to that of NFC extending system **905**. Additionally, or alternatively, the playset **1000** may include more than two NFC extending systems positioned in one or more rooms within the interior **1004** of the playset **1000**.

[0086] In various embodiments, the embodiments of FIGS. **8-10** may be combined with those of FIGS. **1** and **4**. For example, NFC devices as described in the embodiments of FIGS. **8-10** may be utilized within the playset **100** or the playset **400**. With regard to FIG. **1**A, the opening **110** may be replaced with an NFC device such as NFC device **810**, the NFC device **820** and the connection element **840** of FIG. **8**.

[0087] FIG. **11** is a flowchart of a method **1100** for interacting with a playset, according to one or more embodiments. At operation **1110**, a first antenna (e.g., the main antenna **912** of the NFC extending system **905**) is coupled to a first one of a plurality of antennas (e.g., the extending antenna of **922***a* or the extending antenna **922***b* of the NFC extending system **905**) during a first period. In one embodiment, the antenna switching mechanism **970** couples the main antenna **912** of the NFC device **910** with the extending antenna **922***a* of the NFC extending system **905** during the first period. Alternatively, the antenna switching mechanism **970** couples the main antenna **912** of the NFC device **910** with the extending antenna **922***b* of the NFC extending system **905** during the first period. Further, during the operation **1110**, the antenna switching mechanism **970** may receive a power signal wirelessly from the NFC device **155** of the mobile device **150** such that the switching mechanism is wirelessly powered and couples the main antenna **912** with one of the extending antennas **922***a* and **922***b*. Additionally, the control switching element **972** may be wirelessly powered and configured to switch the antenna switching mechanism **970** between the extending antennas **922***a* and **922***b* in response to receiving the power signal.

[0088] At operation **1120**, the NFC device **155** of the mobile device **150** acquires data from a first object. For example, the NFC device **155** wirelessly acquires data from an object wirelessly coupled to the extending antenna **922***a* via the NFC extending system **905**. Alternatively, the NFC device **155** is wirelessly coupled to the extending antenna **922***b* and acquires data from an object wirelessly coupled to the extending antenna **922***b* via the NFC extending system **905**.

[0089] At operation **1130**, the first antenna (e.g., the main antenna **912** of the NFC device **910**) is coupled to a second one of a plurality of antennas (e.g., the other one of the extending antenna of **922***a* and the extending antenna **922***b* of the NFC extending system **905**) during a second period. In one embodiment, if the extending antenna **922***b* was coupled to the main antenna **812** during the first period, the antenna switching mechanism **970** couples the main antenna **812** with the extending antenna **922***a* during the second period. Alternatively, if the extending antenna **922***a* was coupled to the main antenna **912** during the first period, the antenna switching mechanism **970** couples the main antenna **912** with the extending antenna **922***b* during the second period. The second period is non-overlapping with the first period. Further, during the operation **1130**, the antenna switching mechanism **970** may receive a power signal wirelessly from the NFC device **155** of the mobile device **150** such that the switching mechanism is wirelessly powered and couples the main antenna **912** with one of the extending antennas **922***a* and **922***b*. Additionally, the control switching element **972** may be wirelessly powered and configured to switch the antenna switching mechanism **970** between the extending antennas **922***a* and **922***b* in response to receiving the power signal.

[0090] At operation **1140**, the NFC device **155** of the mobile device **150** acquires data from a first object. For example, the NFC device **155** is wirelessly coupled to an object wirelessly coupled to the extending antenna **922***a* and acquires data from the object via the NFC extending system **905**. Alternatively, the NFC device **155** is wirelessly coupled to an object wirelessly coupled to the extending antenna **922***b* and acquires data from the object via the NFC extending system **905**.

[0091] The mobile device **150** may play a sound file via the speaker **151** based on the data acquired during one or more of the operations **1120** and **1140**. In one embodiment,

the mobile device **150** plays a first sound file via the speaker **151** based on data acquired during the operation **1120** and a second sound file via the speaker **151** based on data acquired during the operation **1140**. For example, the controller **153** locates a sound file from the memory **157** based on the data acquired during the operation **1120** and/or **1140**. Alternatively, or additionally, the mobile device **150** may display an image or movie in response to the data acquired during one or more of the operations **1120** and **1140**. For example, the controller **153** locates a movie file from the memory **157** based on the data acquired during the operation **1120** and/or **1140** which is displayed on the display **152**. A first image or movie may be displayed based on data acquired during the operation **1120**. Further, a second image or movie may be displayed based on data acquired during the operation **1140**.

Dual Near-Field Communication Tags

[0092] FIG. **12** illustrates an NFC device **1200**, according to one or more embodiments. The NFC device **1200** includes an NFC tag **1210**, an NFC tag **1220** and a shield **1230**. The shield **1230** shields the NFC tag **1210** from the NFC tag **1220**. Further, the shield **1230** may be referred to as a shield layer. The NFC tag **1210** and the NFC tag **1220** may be passively or actively powered. For example, in one embodiment, the NFC tag **1210** and the NFC tag **1220** are passively powered receive power from an external device, e.g., the mobile device **150**. In another embodiment, the NFC tag **1210** and the NFC tag **1220** are actively powered comprising a power supply. Further, the NFC tags **1210** and **1220** may be coupled to a common power supply.

[0093] As illustrated in FIG. **13**A, the NFC tag **1210** includes an antenna **1212**, a processor **1214**, memory **1216**, and a substrate **1218**. The antenna **1212**, the processor **1214**, and the memory **1216** are disposed on the substrate **1218**. The processor **1214** is powered by a power signal provided by an external device, e.g., the mobile device **150** or a local power supply. The processor **1214** is communicatively coupled with the memory **1216**. For example, the processor **1214** accesses information within the memory **1216** and communicates the information to an external device, e.g., the mobile device **150**, via the antenna **1212**. The memory **1216** stores information regarding a corresponding device. For example, the memory **1216** stores information regarding a corresponding object or objects.

[0094] As illustrated in FIG. **13**B, the NFC tag **1220** includes an antenna **1222**, a processor **1224**, memory **1226**, and a substrate **1228**. The antenna **1222**, the processor **1224**, and the memory **1226** are disposed on the substrate **1228**. The processor **1224** is powered by a power signal provided by an external device, e.g., the mobile device **150** or a local power supply. The processor **1224** is communicatively coupled with the memory **1226**. For example, the processor **1224** accesses information within the memory **1226** and communicates the information to an external device, e.g., the mobile device **150**, via the antenna **1222**. The memory **1226** stores information regarding a corresponding device. For example, the memory **1226** stores information regarding a corresponding object or object.

[0095] The shield **1230** may comprise a ferrite material. For example, the shield **1230** may comprise an iron oxide. The surface area of the shield **1230** may be larger than the outer boundary of each of the antennas of the NFC tags **1210** and **1220**. For example, the antennas of the NFC tags **1210** and **1220** may be bounded on all sides by the shield **1230**. In various embodiments, the shield **1230** may be attached to the NFC tags **1210** and **1220** via an adhesive. Alternatively, the shield **1230** may be attached to the NFC tags **1210** and **1220** through other methods. The shield **1230** isolates a magnetic field generated within the NFC tag **1210** from a magnetic field generated in NFC tag **1220**. Accordingly, the shield **1230** prevents energy generated within the antenna **1212** of the NFC tag **1210** from interacting with energy generated within the antenna **1222** of the NFC tag **1220**. Further, the shield **1230** prevents energy generated within the antenna **1222** of the NFC tag **1220** from interacting with energy generated within the antenna **1212** of the NFC tag **1210**. For example, when a mobile device, e.g., the mobile device **150**, is brought proximate the NFC tag **1210**, energy is generated in the NFC tag **1210** and the shield **1230** prevents energy from being generated in the NFC tag **1220**. Further, when a mobile device, e.g., the mobile device **150**, is brought proximate the NFC tag **1220**, energy is generated in the NFC tag **1220** and the shield **1230** prevents energy from being generated in the NFC tag **1210**.

[0096] FIG. **14** illustrates an NFC device **1400**. The NFC device **1400** includes sides **1402**, **1404**, and **1406**. An NFC tag **1410** is disposed on side **1402**, the NFC tag **1420** is disposed on side **1404**, and the NFC tag **1430** is disposed on side **1406**. Further, the NFC device **1400** may have additional sides not visible in FIG. **14**. Additionally, an NFC tag may be disposed along each of the non-visible sides. In one or more embodiments, the NFC device **1400** includes three or more sides. Accordingly, the NFC device **1400** includes three or more NFC tags. Further, each of the NFC tags **1410**, **1420**, and **1430** may be configured similar to that of the NFC tags **1210** and **1220**.

[0097] FIG. **15** illustrates the NFC device **1400** with the sides **1402**, **1404**, and **1406** made transparent such that the shield **1440** is visible. The shield **1440** may be configured similar to that of shield **1230** of FIG. **13**B. For example, the shield **1440** isolates the NFC tags **1410**, **1420**, and **1430** from each other as described with regard to shield **1230** and NFC tags **1210** and **1220** of FIG. **12**. The surface area of each side of the shield **1440** is larger than an outer boundary of the antenna of each corresponding NFC tag (e.g., the NFC tags **1410**, **1420**, and **1430**). For example, the antenna of each NFC tag (e.g., the NFC tags **1410**, **1420**, and **1430**) is bounded on all sides by a corresponding side of the shield **1440**.

[0098] In one or more embodiments, a shield may be disposed along each side of the NFC device **1400**. For example, a different shield may be attached to a side of the NFC device **1400** opposite each NFC tag.

[0099] FIG. **16** illustrates an NFC device **1600**. The NFC device **1600** includes the NFC tag **1210**, the NFC tag **1220**, and the shield **1230**. The NFC device **1600** additionally includes housing **1610**. The housing **1610** may include illustrations on one or more of the surfaces **1620** and **1630**. The illustrations on the surfaces **1620** and **1630** may correspond to the NFC tag **1210** and the NFC tag **1220**, respectively. For example, an illustration on the surface **1620** is different from an illustration on the surface **1630**. Further, in addition to or alternatively to illustrations, the surface **1620** may have one of a first shape and feature and the surface **1630** may have one of a second shape and feature. The first shape and feature may differ from the second shape and feature.

[0100] FIG. **17** illustrates a flowchart of method **1700** for interacting within an object, according to one or more embodiments. At operation **1710**, the NFC tag **1210** is powered and data is received from the NFC tag **1210**. For example, in one or more embodiments, when a mobile device, e.g., the mobile device **150**, is positioned proximate the NFC tag **1210**, a power signal provided by the NFC device **155** of the mobile device **150** is received by the antenna **1212** and communicated to the processor **1214**. In response to receipt of the power (e.g., query) signal, the processor **1214** accesses the memory **1216** and transmits data corresponding to the NFC tag **1210** to the mobile device **150** via the antenna **1212**. For example, the first action corresponds to a first state the NFC device **1600**. Further, due to the shield **1230**, the mobile device **150** is not able to communicate with the NFC tag **1220**. In one specific embodiment, the NFC device **1600** corresponds to a piece of bacon and the first state corresponds to a raw, or uncooked, state. That is, one side of the NFC device can have a picture of raw bacon while the opposite side contains a picture of cooked bacon.

[0101] At operation **1720**, the mobile device **150** generates first instructions based on the first data received from the NFC tag **1210**. For example, the mobile device **150** generates first instructions corresponding to the first state of the NFC device **1600**. In one embodiment, the first instructions initiate a function within an application executing on the mobile device **150**. For example, the first instructions initiate a counter within the application running on the mobile device **150**. The counter may be displayed to a user of the mobile device **150** via display **152**. At the completion of the counter, the mobile device **150** may instruct a user to change the position of the NFC device **1600** such that the NFC tag **1220** is communicatively coupled to the NFC device of the mobile device **150**.

[0102] At operation **1730**, the NFC tag **1220** is powered and data is received from the NFC tag **1220**. For example, in one or more embodiments, a power signal provided by the NFC device **155** of the mobile device **150** is received by the antenna **1222** and communicated to the processor **1224**. In response to receipt of the query signal, the processor **1224** accesses the memory **1226** and transmits data corresponding to the NFC tag **1220** to the mobile device **150** via the antenna **1222**. For example, the second action corresponds to a second state the NFC device **1600**. In one embodiment, the second state corresponds to bacon in a cooked state.

[0103] At operation **1740**, the mobile device **150** generates second instructions based on the second data received from the NFC tag **1220**. For example, the mobile device **150** generates second instructions corresponding to the second state of the NFC device **1600**. In one embodiment, the second instructions initiate a function within an application executing on the mobile device **150**. For example, the second instructions initiate a displayed image or video output a sound indicating a corresponding action is complete. For example, a bell sound may be output via the speaker **151** indicating the bacon has been cooked.

[0104] In one or more embodiments, an NFC device having one or more NFC tags and a shield (e.g., the NFC device **1200** or **1600**) may be utilized within a playset, such as playset **100** or **400**. For example, one or more of the identification tag **431** of the object **430** and the object **432** of FIG. **4** may include two more NFC tags and a shield as illustrated in FIG. **12**. In one embodiment, the identification tag **431** is configured similar to that of the NFC device **1200**. In such an embodiment, the identification tag **431** includes two NFC tags separated by a shield. When utilized with the playset, during a first time period the object **430** may be positioned with a first orientation relative to the mobile device **150** such that a first NFC tag may be read by the NFC device **155**. Further, a second time period the object **430** may be positioned with a second orientation relative to the mobile device **150** such that a second NFC tag may be read by the NFC device **155**. The first and second NFC tags may correspond to a first and second state, respectively, of the object **430**. Alternatively, the first and second NFC tags may correspond to a first object **430** and a second object, respectively.

[0105] In various embodiments, an NFC device comprising one or more NFC tags may be utilized with a playset configured similar to that of the playset **800** of FIG. **8**, the playset of FIG. **9**, and/or the playset of FIG. **10**. For example, the NFC device **1200** may be utilized in the place of object **830** and/or **930** in the embodiments of FIGS. **8**, **9** and/or **10**. In one embodiment, with reference to FIG. **8**, during a first period, the NFC tag **1210** couples with the NFC device **820** and during a second period the NFC tag **1220** couples with the NFC device **820**. Further, with reference to FIG. **9**, during a first period, the NFC tag **1210** couples with the NFC device **920** and during a second period the NFC tag **1220** couples with the NFC device **920**. Additionally, with reference to FIG. **10**, during a first period, the NFC tag **1210** couples with the NFC device **920** and during a second period the NFC tag **1220** couples with the NFC device **920**.

[0106] In the current disclosure, reference is made to various embodiments. However, it should be understood that the present disclosure is not limited to specific described embodiments. Instead, any combination of the following features and elements, whether related to different embodiments or not, is contemplated to implement and practice the teachings provided herein. Additionally, when elements of the embodiments are described in the form of "at least one of A and B," it will be understood that embodiments including element A exclusively, including element B exclusively, and including element A and B are each contemplated. Furthermore, although some embodiments may achieve advantages over other possible solutions or over the prior art, whether or not a particular advantage is achieved by a given embodiment is not limiting of the present disclosure. Thus, the aspects, features, embodiments and advantages disclosed herein are merely illustrative and are not considered elements or limitations of the appended claims except where explicitly recited in a claim(s). Likewise, reference to "the invention" shall not be construed as a generalization of any inventive subject matter disclosed herein and shall not be considered to be an element or limitation of the appended claims except where explicitly recited in a claim(s).

[0107] As will be appreciated by one skilled in the art, embodiments described herein may be embodied as a system, method or computer program product. Accordingly, embodiments may take the form of an entirely hardware embodiment, an entirely software embodiment (including firmware, resident software, micro-code, etc.) or an embodiment combining software and hardware aspects that may all generally be referred to herein as a "circuit," "module" or "system." Furthermore, embodiments described herein may take the form of a computer program product embodied in

one or more computer readable medium(s) having computer readable program code embodied thereon.

[0108] Program code embodied on a computer readable medium may be transmitted using any appropriate medium, including but not limited to wireless, wireline, optical fiber cable, RF, etc., or any suitable combination of the foregoing.

[0109] Computer program code for carrying out operations for embodiments of the present disclosure may be written in any combination of one or more programming languages, including an object oriented programming language such as Java, Smalltalk, C++ or the like and conventional procedural programming languages, such as the "C" programming language or similar programming languages. The program code may execute entirely on the user's computer, partly on the user's computer, as a stand-alone software package, partly on the user's computer and partly on a remote computer or entirely on the remote computer or server. In the latter scenario, the remote computer may be connected to the user's computer through any type of network, including a local area network (LAN) or a wide area network (WAN), or the connection may be made to an external computer (for example, through the Internet using an Internet Service Provider).

[0110] Aspects of the present disclosure are described herein with reference to flowchart illustrations or block diagrams of methods, apparatuses (systems), and computer program products according to embodiments of the present disclosure. It will be understood that each block of the flowchart illustrations or block diagrams, and combinations of blocks in the flowchart illustrations or block diagrams, can be implemented by computer program instructions. These computer program instructions may be provided to a processor of a general purpose computer, special purpose computer, or other programmable data processing apparatus to produce a machine, such that the instructions, which execute via the processor of the computer or other programmable data processing apparatus, create means for implementing the functions/acts specified in the block(s) of the flowchart illustrations or block diagrams.

[0111] These computer program instructions may also be stored in a computer readable medium that can direct a computer, other programmable data processing apparatus, or other device to function in a particular manner, such that the instructions stored in the computer readable medium produce an article of manufacture including instructions which implement the function/act specified in the block(s) of the flowchart illustrations or block diagrams.

[0112] The computer program instructions may also be loaded onto a computer, other programmable data processing apparatus, or other device to cause a series of operational steps to be performed on the computer, other programmable apparatus or other device to produce a computer implemented process such that the instructions which execute on the computer, other programmable data processing apparatus, or other device provide processes for implementing the functions/acts specified in the block(s) of the flowchart illustrations or block diagrams.

[0113] The flowchart illustrations and block diagrams in the Figures illustrate the architecture, functionality, and operation of possible implementations of systems, methods, and computer program products according to various embodiments of the present disclosure. In this regard, each block in the flowchart illustrations or block diagrams may represent a module, segment, or portion of code, which comprises one or more executable instructions for implementing the specified logical function(s). It should also be noted that, in some alternative implementations, the functions noted in the block may occur out of the order noted in the Figures. For example, two blocks shown in succession may, in fact, be executed substantially concurrently, or the blocks may sometimes be executed in the reverse order or out of order, depending upon the functionality involved. It will also be noted that each block of the block diagrams or flowchart illustrations, and combinations of blocks in the block diagrams or flowchart illustrations, can be implemented by special purpose hardware-based systems that perform the specified functions or acts, or combinations of special purpose hardware and computer instructions.

[0114] While the foregoing is directed to embodiments of the present disclosure, other and further embodiments of the disclosure may be devised without departing from the basic scope thereof, and the scope thereof is determined by the claims that follow.

1. A near field communication extending system for a playset, comprising:

a main antenna positioned at a first location of the playset and configured to wirelessly communicate to a near field communication device;

a plurality of extending antennas positioned at a plurality of different locations within the playset; and

an antenna switching mechanism coupled to the plurality of extending antennas via a plurality of connection elements, wherein the antenna switching mechanism is configured to switchably couple the main antenna with each of the plurality of extending antennas.

2. The near field communication extending system of claim **1**, wherein the main antenna is positioned at the first location external to an interior region of the playset.

3. The near field communication extending system of claim **2**, wherein the playset is subdivided into a plurality of rooms and each of the plurality of extending antennas is positioned in a different one of the plurality of rooms.

4. The near field communication extending system of claim **3**, wherein the antenna switching mechanism is positioned external to the interior region of the playset.

5. The near field communication extending system of claim **4**, wherein the antenna switching mechanism is further configured to:

couple the main antenna with a first one of the plurality of extending antennas during a first period; and

couple the main antenna with a second one of the plurality of extending antennas during a second period occurring after the first period.

6. The near field communication extending system of claim **5**, wherein the antenna switching mechanism is further configured to couple the main antenna with the first one of the plurality of extending antennas during a third period occurring after the second period.

7. The near field communication extending system of claim **5**, wherein the antenna switching mechanism comprises a control switching system configured to receive a power signal from the near field communication device and switch the antenna switching mechanism from coupling the main antenna with the first one of the plurality of extending antennas to coupling the main antenna with the second one of the plurality of extending antennas based on the power signal.

8. The near field communication extending system of claim **4**, wherein the antenna switching mechanism is configured to wirelessly receive a power signal from the near field communication device via the main antenna.

9. The near field communication extending system of claim **1**, wherein the plurality of extending antennas are configured to couple with a first object comprising:

a first antenna coupled to a first memory;

a second antenna coupled to a second memory; and

a shield disposed between the first and second antennas.

10. A playset, comprising:

a near field communication extending system comprising:

a main antenna positioned at a first location of the playset and configured to wirelessly communicate to a near field communication device;

a plurality of extending antennas positioned at a plurality of different locations in an interior of the playset; and

an antenna switching mechanism coupled to the plurality of extending antennas via a plurality of connection elements, wherein the antenna switching mechanism is configured to switchably couple the main antenna with each of the plurality of extending antennas.

11. The playset of claim **10**, wherein the main antenna is positioned at the first location external to an interior region of the playset.

12. The playset of claim **11**, wherein the playset is subdivided into a plurality of rooms and each of the plurality of extending antennas is positioned in a different one of the plurality of rooms.

13. The playset of claim **10**, wherein the antenna switching mechanism is positioned external to the interior of the playset.

14. The playset of claim **13**, wherein the antenna switching mechanism is further configured to:

couple the main antenna with a first one of the plurality of extending antennas during a first period; and

couple the main antenna with a second one of the plurality of extending antennas during a second period occurring after the first period.

15. The playset of claim **14**, wherein the antenna switching mechanism comprises a control switching system configured to receive a power signal from the near field communication device and switch the antenna switching mechanism from coupling the main antenna with the first one of the plurality of extending antennas to coupling the main antenna with the second one of the plurality of extending antennas based on the power signal.

16. The playset of claim **13**, wherein the antenna switching mechanism is configured to wirelessly receive a power signal from the near field communication device via the main antenna.

17. A near field communication (NFC) device comprises:

a first NFC tag having a first antenna coupled to a first memory;

second NFC tag having a second antenna coupled to a second memory; and

a first shield disposed between the first and second NFC tags, wherein the first shield comprises a ferrite material and bounds each side of the first antenna and each side of the second antenna.

18. The NFC device of claim **17**, further comprising:

a third NFC tag comprising a third antenna and coupled a third memory;

a fourth NFC tag comprising a fourth antenna and to a fourth memory; and

a second shield disposed between the third and fourth antennas, wherein the second shield comprises a ferrite material and bounds each side of the third antenna.

19. The NFC device of claim **17**, wherein the first NFC tag and the second NFC tag are configured to be powered by a power signal provided by an antenna external to the NFC device, and wherein when the first NFC tag is powered by the power signal the first shield prevents the power signal from powering the second NFC tag and when the second NFC tag is powered by the power signal the first shield prevents the power signal from powering the first NFC tag.

20. The NFC device of claim **17** further comprises a housing comprising:

a first surface having a first illustration, where the first surface corresponds to the first NFC tag and the first illustration corresponds to a first state of the NFC device; and

a second surface having a second illustration, where the second surface corresponds to the second NFC tag and the second illustration corresponds to a second state of the NFC device.

21. The near field communication extending system of claim **1**, wherein the near field communication device includes a reader.

22. The near field communication extending system of claim **1**, wherein the near field communication device is part of a mobile device.

* * * * *