US 20220097580A1

(19) United States

(12) Patent Application Publication

(10) Pub. No.: US 2022/0097580 A1

(43) Pub. Date: Mar. 31, 2022

Gupta et al.

(54) VEHICLE SEAT WITH INTEGRATED TEMPERATURE-CONTROL SYSTEM

(71) Applicant: **Tesla, Inc.**, Palo Alto, CA (US)

(72) Inventors: **Gaurang Gupta**, Mountain View, CA (US); **Wentao Wang**, Sunnyvale, CA (US); **Adnan Esmail**, Palo Alto, CA (US)

(21) Appl. No.: **17/444,692**

(22) Filed: **Aug. 9, 2021**

Related U.S. Application Data

(63) Continuation of application No. 16/281,500, filed on Feb. 21, 2019, now Pat. No. 11,084,404.

(60) Provisional application No. 62/647,230, filed on Mar. 23, 2018.

Publication Classification

(51) **Int. Cl.**
B60N 2/56 (2006.01)
B60N 2/70 (2006.01)

(52) **U.S. Cl.**
CPC ***B60N 2/5614*** (2013.01); ***B60N 2/5685*** (2013.01); ***B60N 2/5642*** (2013.01); ***B60N 2/70*** (2013.01)

(57) **ABSTRACT**

A vehicle seat includes a seating portion and a backrest portion coupled to the seating portion. The seat also includes a temperature-control system associated with at least one of the seating portion and the backrest portion. The temperature-control system includes a base layer and an intermediate layer disposed adjacent to the base layer. The intermediate layer is adapted to allow fluid to flow through it. The temperature-control system includes a cover layer disposed adjacent to the intermediate layer. The temperature-control system includes at least one heating element disposed between the intermediate layer and the cover layer. The temperature-control system further includes a fluid pump to provide fluid flow through the intermediate layer.

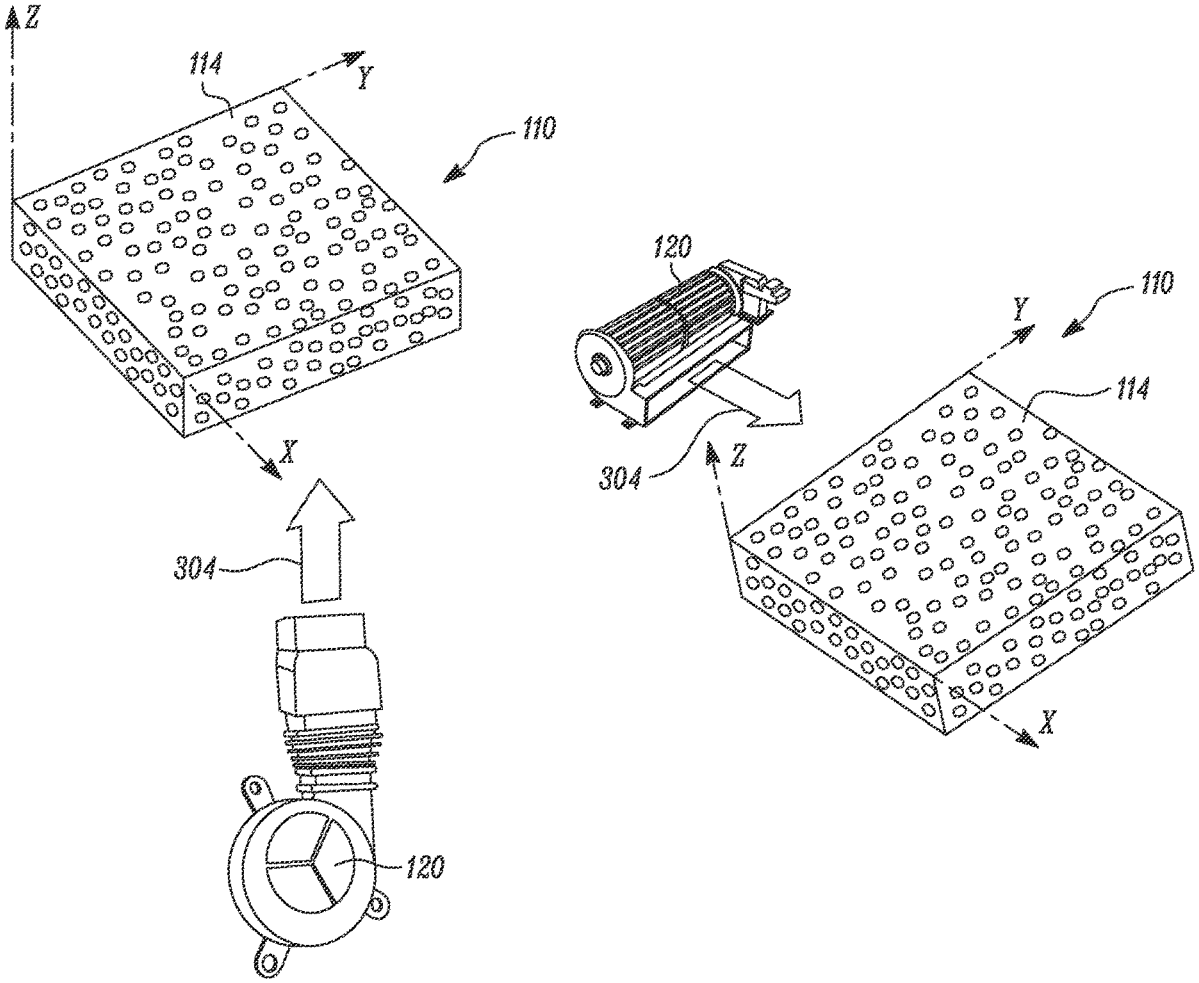

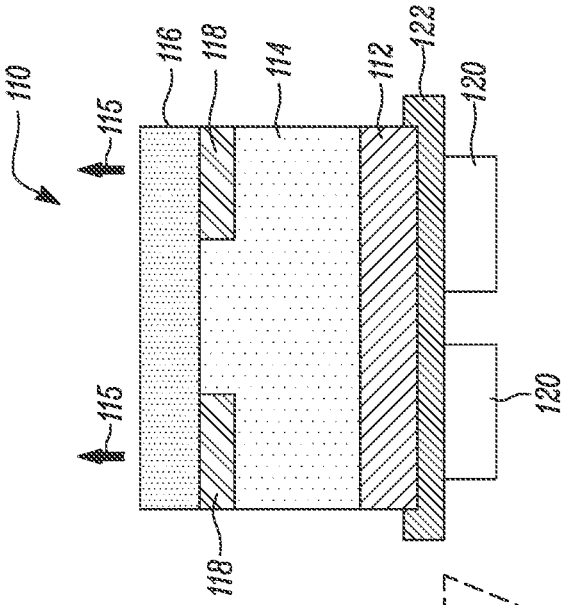
110
115
116
118
114
112
122
120
115
118
120

FIG. 1B

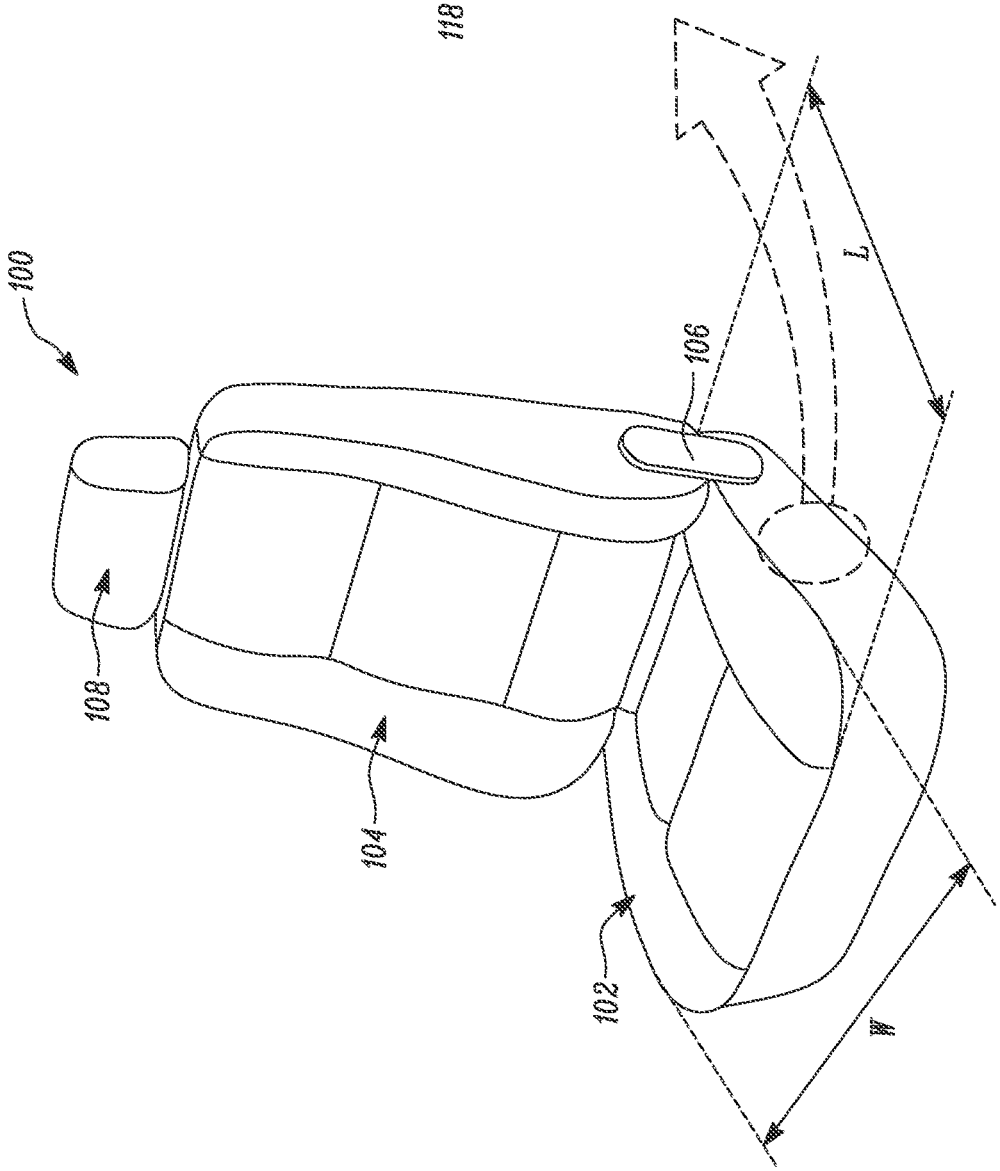
100
108
104
102
106
L
W

FIG. 1A

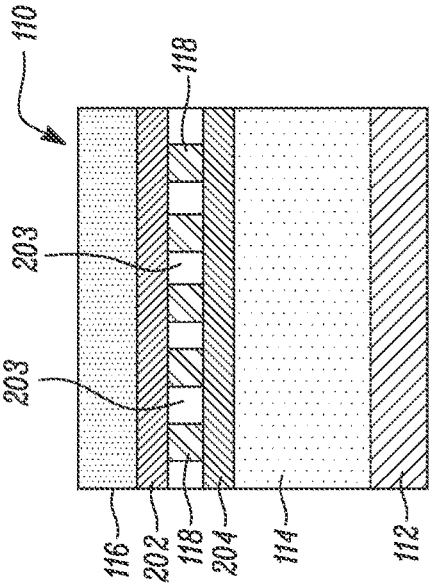

FIG. 2B

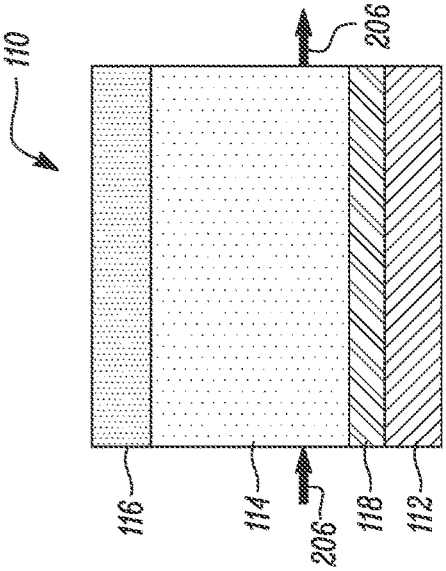

FIG. 2D

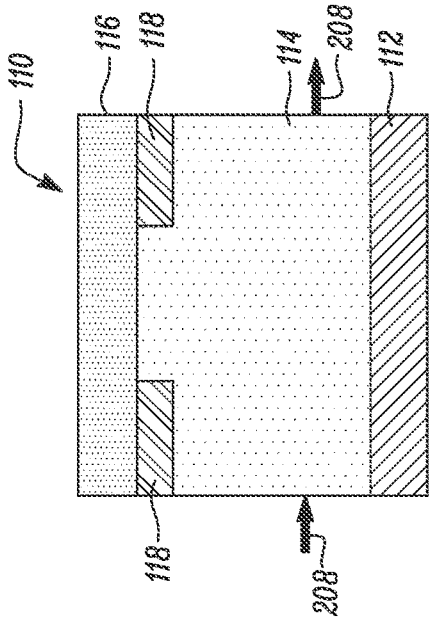

FIG. 2A

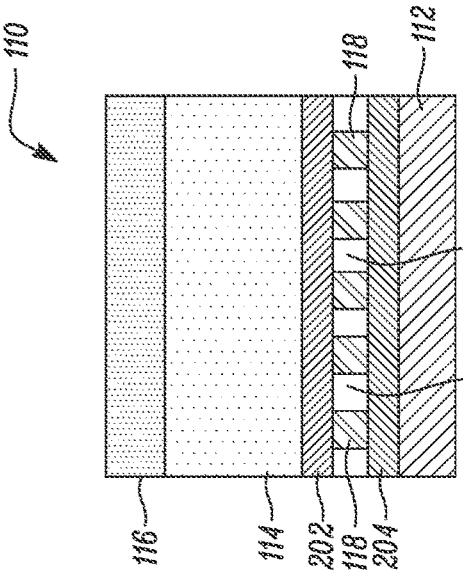

FIG. 2C

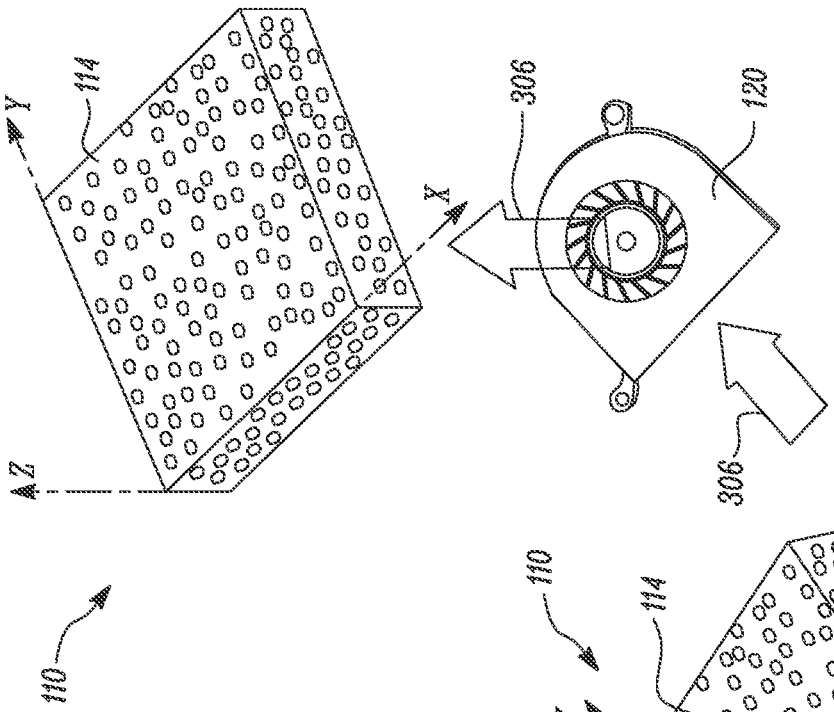

FIG. 3C

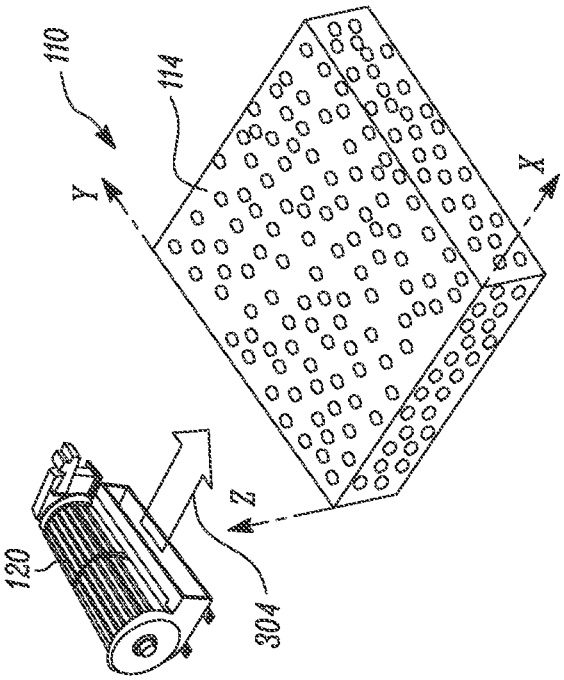

FIG. 3B

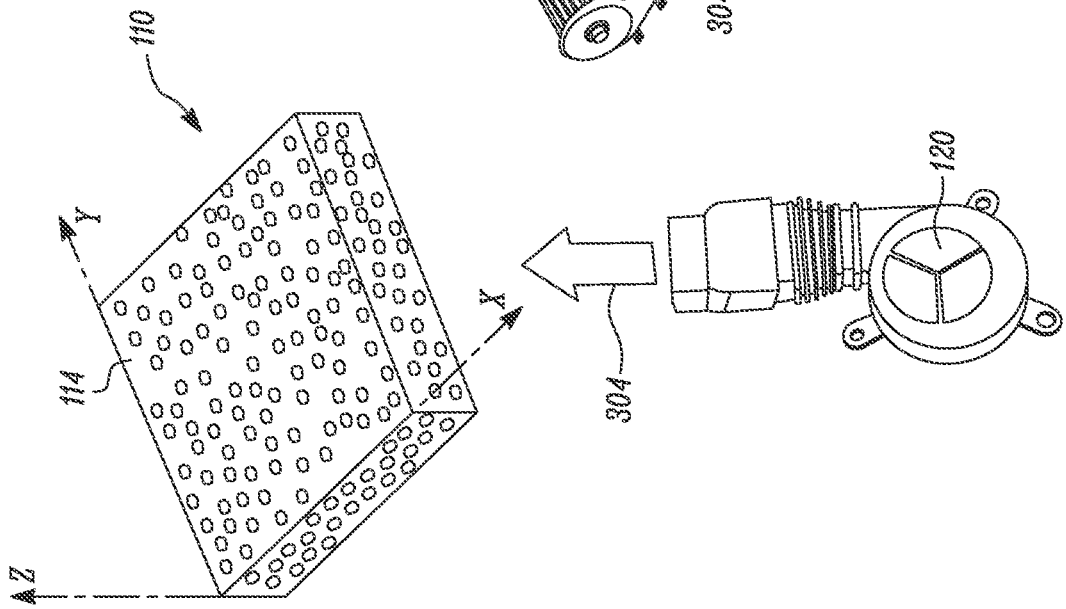

FIG. 3A

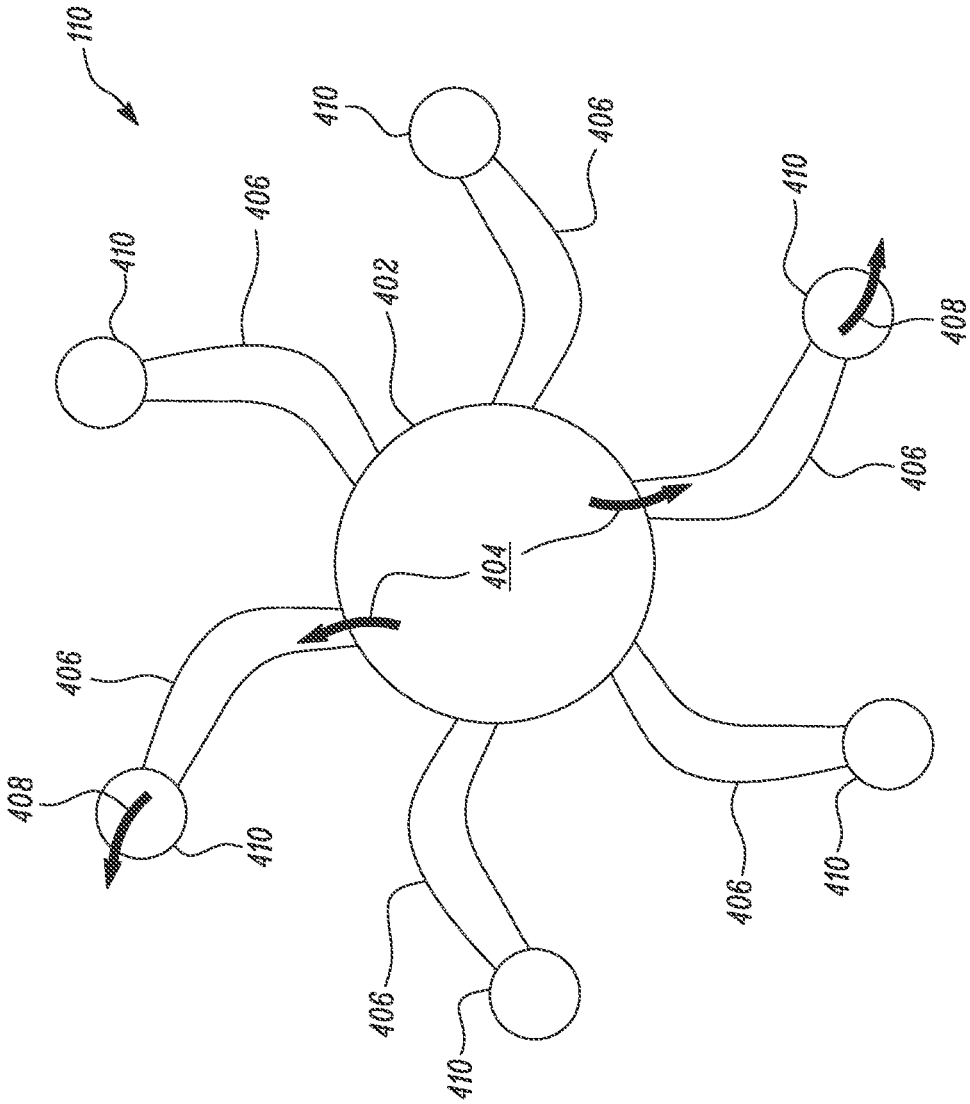

FIG. 4

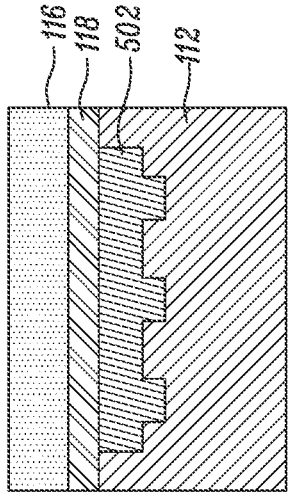

FIG. 5B

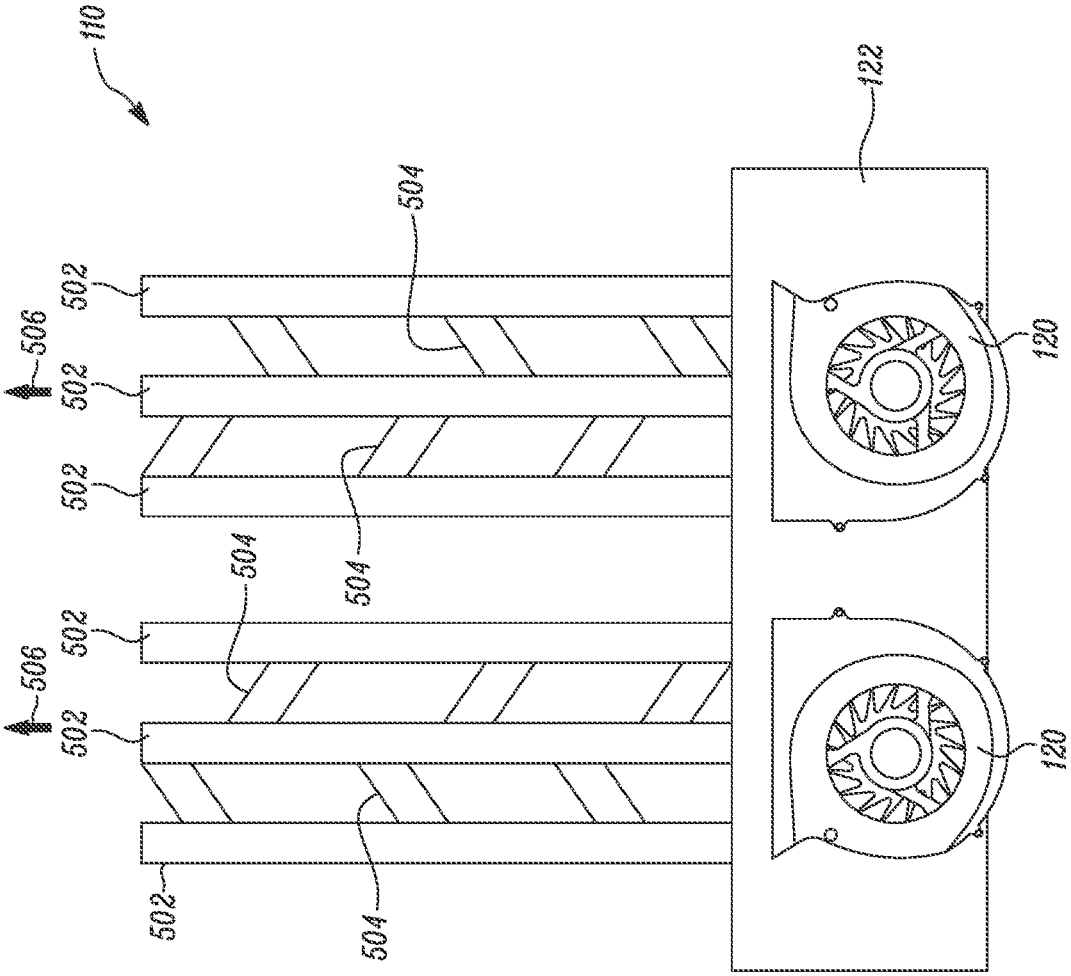

FIG. 5A

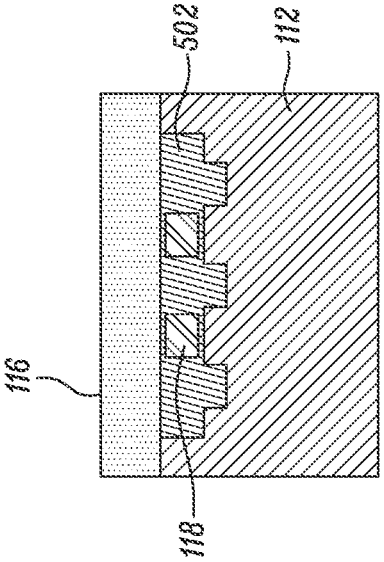

FIG. 6B

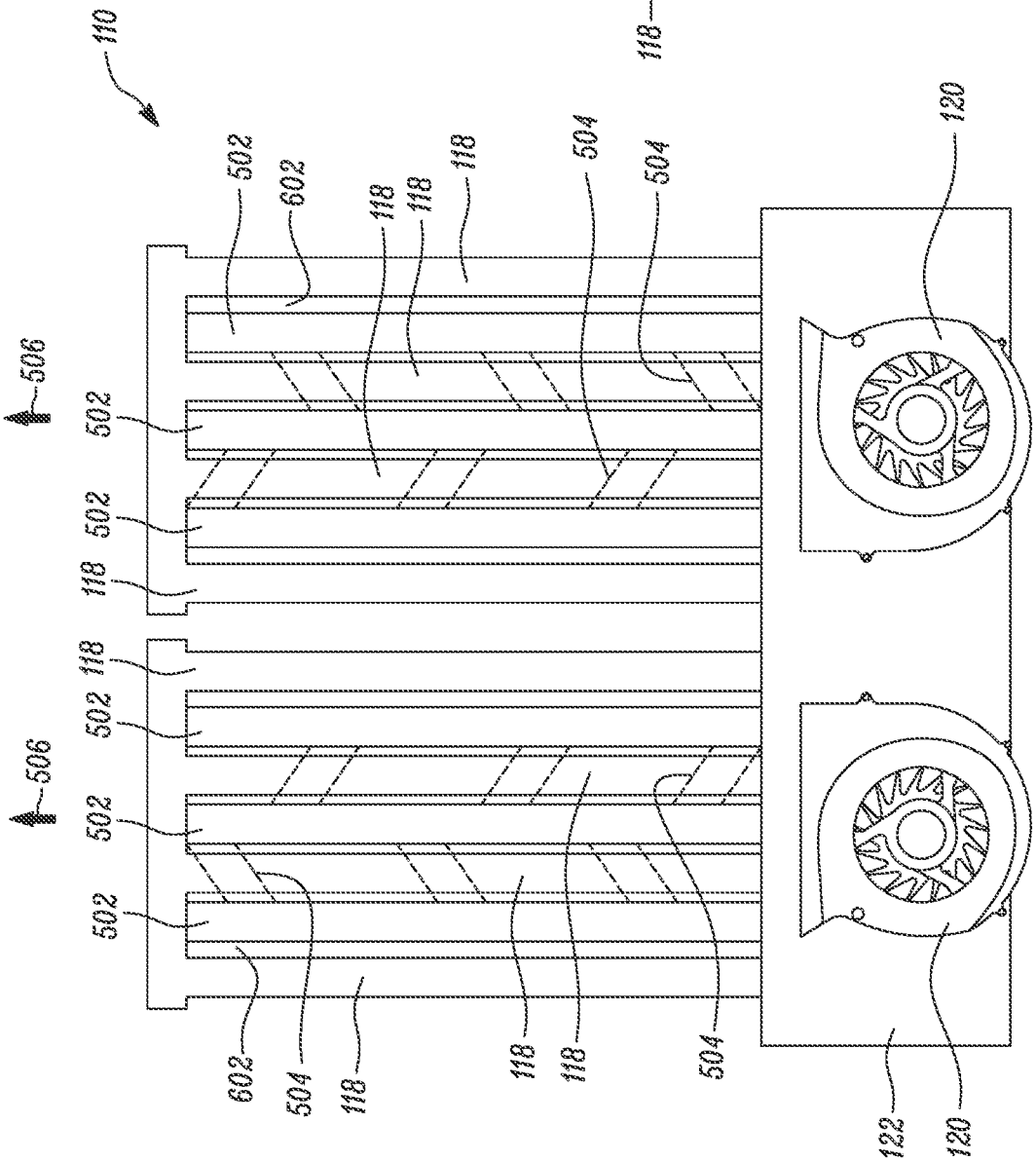

FIG. 6A

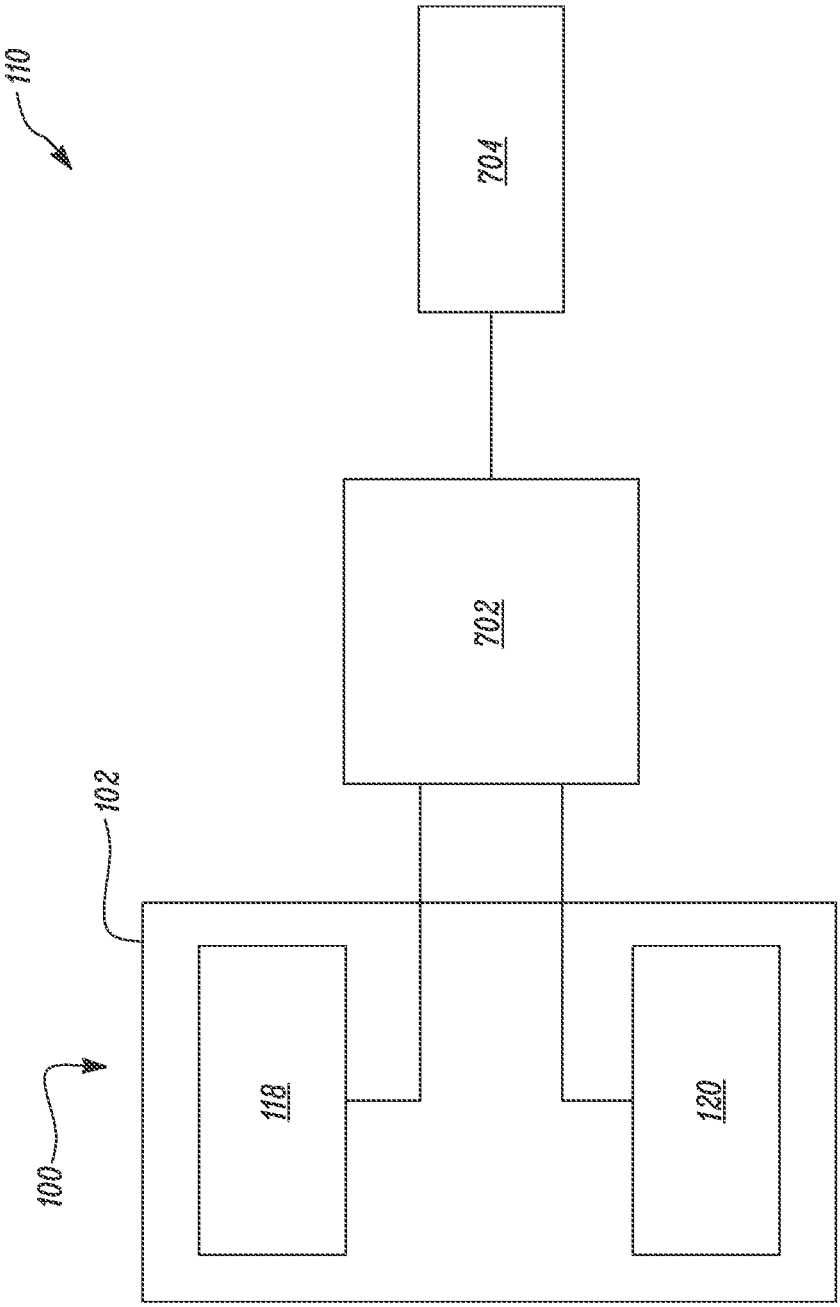

FIG. 7

VEHICLE SEAT WITH INTEGRATED TEMPERATURE-CONTROL SYSTEM

CROSS-REFERENCES TO RELATED APPLICATIONS

[0001] This application is a continuation of U.S. application Ser. No. 16/281,500, titled "VEHICLE SEAT WITH INTEGRATED TEMPERATURE-CONTROL SYSTEM," filed on Feb. 21, 2019, which claims priority to U.S. Provisional Application No. 62/647,230, entitled "VEHICLE SEAT WITH INTEGRATED TEMPERATURE-CONTROL SYSTEM", filed Mar. 23, 2018, which is hereby incorporated herein by reference in its entirety and made part of the present U.S. Utility patent application for all purposes.

STATEMENT REGARDING FEDERALLY SPONSORED RESEARCH OR DEVELOPMENT

[0002] Not applicable.

INCORPORATION-BY-REFERENCE OF MATERIAL SUBMITTED ON A COMPACT DISC

[0003] Not applicable.

BACKGROUND

Technical Field

[0004] The present disclosure relates to a vehicle seat. More particularly, the present disclosure relates to a temperature-control system for the vehicle seat.

Description of Related Art

[0005] A vehicle, such as a sedan, a Sports Utility Vehicle (SUV), a Multi Utility Vehicle (MUV), a van, a bus, a truck, and the like, includes one or more seats to accommodate a driver and passengers. During warm and/or humid weather conditions, vehicle seats will become warm and may cause occupants to perspire, especially in areas of seat contact, creating an uncomfortable environment. Conversely, during cold weather conditions, vehicle seats can be cold, similarly creating an uncomfortable environment.

[0006] Conventional vehicle seats do not solve the aforementioned problems. Attempts to provide air ventilation through the seat foam are typically insufficient to remove excess heat and provide a comfortable environment for the occupant. Further, conventional heating systems are bulky, occupy space in the seat which typically requires the seat to be thicker, and are inefficient in heating the seat as the heat typically must travel through multiple layers and heats regions of the seat that the occupant does not contact. Hence, there is a need for an improved temperature-control system for vehicle seats.

SUMMARY

[0007] This application relates to a vehicle seat. The seat includes a seating portion and a backrest portion coupled to the seating portion. The seat also includes a temperature-control system associated with at least one of the seating portion and the backrest portion. The temperature-control system includes a base layer and an intermediate layer disposed adjacent to the base layer. The intermediate layer allows fluid to flow through it. The temperature-control system includes a cover layer disposed adjacent to the intermediate layer. The temperature-control system also includes at least one heating element disposed between the intermediate layer and the cover layer. The temperature-control system further includes a fluid pump to provide the flow of fluid through the intermediate layer.

[0008] In embodiments, a temperature-control system for a seat is provided. The temperature-control system is associated with at least one of a seating portion and a backrest portion of the seat. The temperature-control system includes a base layer. The temperature-control system includes an intermediate layer disposed adjacent to the base layer. The intermediate layer allows fluid to flow through it. The temperature-control system includes a cover layer disposed adjacent to the intermediate layer. The temperature-control system also includes at least one heating element disposed between the intermediate layer and the cover layer. The temperature-control system further includes a fluid pump to provide the flow of fluid through the intermediate layer.

BRIEF DESCRIPTION OF THE DRAWINGS

[0009] FIG. **1**A illustrates a perspective view of an exemplary seat, according to certain embodiments of the current invention.

[0010] FIG. **1**B illustrates a partial cross-sectional view of a portion of a temperature-control system for the seat, according to certain embodiments of the current invention.

[0011] FIGS. **2**A to **2**D illustrate different partial cross-sectional views of the portion of the temperature-control system, according to certain embodiments of the current invention.

[0012] FIGS. **3**A to **3**C illustrate different partial perspective views of another portion of the temperature-control system, according to certain embodiments of the current invention.

[0013] FIG. **4** illustrates a partial top view of another portion of the temperature-control system, according to certain embodiments of the current invention.

[0014] FIGS. **5**A and **5**B illustrate a partial top view and a partial cross-sectional view, respectively, of another portion of the temperature-control system, according to certain embodiments of the current invention.

[0015] FIGS. **6**A and **6**B illustrate a partial top view and a partial cross-sectional view, respectively, of another portion of the temperature-control system, according to certain embodiments of the current invention.

[0016] FIG. **7** is a schematic representation of the temperature-control system, according to certain embodiments of the current invention.

[0017] Embodiments of the present disclosure and their advantages are best understood by referring to the detailed description that follows. It should be appreciated that like reference numerals are used to identify like elements illustrated in one or more of the figures, wherein showings therein are for purposes of illustrating embodiments of the present disclosure and not for purposes of limiting the same.

DETAILED DESCRIPTION OF THE DISCLOSURE

[0018] The present disclosure relates to a vehicle seat. More particularly, the present disclosure relates to a temperature-control system for the seat associated with the

vehicle. The temperature-control system provides cooling and/or heating of one or more portions of any seat in a vehicle, such as a driver seat, a co-passenger seat, a rear passenger seat, a bench-type passenger seat, or other seat. The temperature-control system includes a number of components, such as multiple layers of different materials, a fluid pump, and a heating element, working together to provide active cooling and/or heating of the seat.

[0019] The temperature-control system provides a low cost, low noise, power efficient, and effective method for cooling and/or heating of the seat. The temperature-control system may be incorporated in a seat having any size and/or shape associated with the vehicle. Reference will now be made in detail to specific aspects or features, examples of which are illustrated in the accompanying drawings. Wherever possible, corresponding or similar reference numbers will be used throughout the drawings to refer to the same or corresponding parts.

[0020] FIG. **1**A shows a perspective view of an exemplary seat **100**. The seat **100** includes a seating portion **102**. The seating portion **102** provides a seating surface for an occupant. The seat **100** also includes a backrest portion **104**. The backrest portion **104** may be coupled to the seat **100** portion via a hinge joint **106**. The backrest portion **104** provides a back support to the occupant seated on the seating portion **102**. Additionally, the seat **100** also includes a headrest portion **108**. The headrest portion **108** may be coupled to the backrest portion **104**. The headrest portion **108** provides a head support to the occupant seated on the seating portion **102**. In some embodiments, the headrest portion **108** may be integrally formed with the backrest portion **104**.

[0021] The seat **100** further includes a temperature-control system **110**. FIG. **1**B is a partial cross-sectional view of the temperature-control system **110**. The temperature-control system **110** may be referred to as the "system **110**." In the illustrated embodiment, the system **110** will be described with reference to the seating portion **102**. The system **110** may be, additionally or optionally, employed within the backrest portion **104** and/or the headrest portion **108**. The system **110** includes a base layer **112**. The base layer **112** extends at least partially along a width "W" and a length "L" of the seating portion **102**. The base layer **112** may be made from a polymer foam, a polymer wire mesh, or another suitable material. In some embodiments, the base layer **112** is made using a cushion foam, a nylon wire mesh, or another non-metallic material.

[0022] The system **110** includes an intermediate layer **114**. The intermediate layer **114** is disposed adjacent to the base layer **112**. The intermediate layer **114** extends at least partially along the width "W" and the length "L" of the seating portion **102**. The intermediate layer **114** includes a substantially porous configuration, for example a continuous network of pores. The intermediate layer **114** allows fluid to flow through it. In the illustrated embodiment, the fluid flow is substantially perpendicular to the intermediate layer **114**, as shown by arrows **115**. The intermediate layer **114** may be made of a polymer foam, a polymer mesh, a polymer wire mesh, a metallic mesh, a metallic wool, a wire mesh, or another suitable material. In some embodiments, the intermediate layer **112** may be made of an aluminum mesh, an aluminum wire mesh, a nylon wire mesh, a steel wool, or another mesh. The intermediate layer **114** may be manufactured using standard methods, including a sol-gel process or another process.

[0023] The system **110** includes a cover layer **116**. The cover layer **116** is disposed adjacent to the intermediate layer **114**. The cover layer **116** extends along the width "W" and the length "L" of the seating portion **102**. The cover layer **116** encloses the intermediate layer **114** therein. The cover layer **116** may be made of leather, a synthetic leather, a fabric, a polymer foam, or another suitable material. In an embodiment, the cover layer **116** is a leather or synthetic leather with a foam.

[0024] The system **110** includes heating elements **118** disposed between the intermediate layer **114** and the cover layer **116**. In FIG. **1**B, two heating elements **118** are shown. In other embodiments, there is one heating element **118**. In other embodiments, there are multiple heating elements **118**. Each heating element **118** is spaced apart from another. Each heating element **118** provides heat to the seating portion **102** to increase its temperature. Each heating element **118** may be an electrically powered heating element, a copper-based heating element, a heat pipe, or another heating element.

[0025] As shown in the embodiment illustrated in FIG. **2**A, the system **110** includes the base layer **112**, the intermediate layer **114**, the cover layer **116**, and the heating elements **118**. Fluid flow is substantially parallel to the intermediate layer **114**, as shown by arrows **208**. In some embodiments, a distribution layer **202** is associated with each heating element **118**. The distribution layer **202** may provide substantially even distribution of heat generated by each of the heating elements **118**. The distribution layer **202** may be made of a metal, a conductive polymer, or another thermally-conductive material that distributes heat.

[0026] Further, a gap **203** may separate heating elements **118** and may allow air to flow, improving heat distribution. Each heating element **118** may also include an insulating layer **204** to thermally or electrically insulate the heating element **118** from other areas within the layer or other components. In embodiments, the insulating layer **204** allows for the distribution of heat towards the cover layer **116** and limits the spread of heat to other portions of the system **110**, such as the intermediate layer **114** and/or the base layer **112**. The insulating layer **204** may be a polymer, rubber, or another insulating material. The heating elements **118**, the distribution layer **202**, and/or the insulation layer **204** may be disposed non-continuously across the width "W" and the length "L" of the seating portion **102**.

[0027] As shown in the embodiment of FIG. **2**C, each of the heating elements **118**, the distribution layer **202**, and/or the insulation layer **204** are disposed between the base layer **112** and the intermediate layer **114**. In some embodiments, such as the one shown in FIG. **2**D, the heating element **118** includes a single heating element **118**. In other embodiments, there are multiple heating elements **118**. The heating elements **118** may be disposed between the base layer **112** and the intermediate layer **114**. In the illustrated embodiments of FIGS. **2**C and **2**D, the flow of the fluid is substantially parallel to the intermediate layer **114**, as shown by arrows **206**. In other embodiments, the flow of the fluid may be in any direction, such as perpendicular to the intermediate layer **114**, based on application requirements.

[0028] As shown in FIG. **1**B, the system **110** includes one or more fluid pumps **120**. Each fluid pump **120** provides fluid that flows through the intermediate layer **114**. In embodiments, the fluid is water. In other embodiments, the fluid is an aqueous-based coolant. In such a situation, the fluid pump **120** is a liquid pump. In embodiments, the fluid

is air. In such a situation, the fluid pump **120** is an air pump. In one embodiment, the fluid pump **120** provides flow of a fluid that has a lower temperature than the seating portion **102**. The flow of the fluid cools the seating portion **102** by reducing its overall temperature or the temperature in specific regions where the occupant is seated.

[0029] In another embodiment, when the heating elements **118** are active, the flow of the fluid may distribute heat generated by the heating element **118** across the seating portion **102**. In another embodiment, the fluid pump **120** provides the flow of the fluid that has a relatively higher temperature with respect to the seating portion **102**. In such a situation, the flow of the fluid heats the seating portion **102** by increasing its overall temperature, or the temperature in specific regions where the occupant is seated. In such an embodiment, the heating element **118** may be, optionally, omitted.

[0030] The system **110** also includes a support portion **122** disposed adjacent to the seating portion **102** and may be next to the fluid pump **120**. The support portion **122** is also disposed adjacent to the base layer **112**. The support portion **122** may be made of a metal, a polymer, or another suitable material. In embodiments, the support portion **122** is made from an aluminum sheet or a plastic sheet. Further, the base layer **112** may be partially or fully embedded within the support portion **122**. The support portion **122** supports the fluid pump **120** thereon. In embodiments, the fluid pump **120** is connected to a frame (not shown) of the seat **100** or a chassis (not shown) of the vehicle. In such a situation, the support portion **122** may be omitted.

[0031] FIGS. **3**A to **3**C illustrate different configurations of the fluid pump **120**. Different layers of material, such as the base layer **112**, the cover layer **116**, the heating elements **118**, the support portion **122**, and other elements, are not shown in FIGS. **3**A to **3**C for the purposes of clarity and explanation. The fluid pump **120** may be a centrifugal type fluid pump as shown in FIG. **3**A. In an embodiment, the flow of the fluid is transverse to an X-Y plane of the intermediate layer **114**, as shown by an arrow **302**. The fluid pump **120** may be a cross-flow fluid pump as shown in FIG. **3**B. The fluid flow may be parallel to the X-Y plane of the intermediate layer **114**, as shown by an arrow **304**.

[0032] The fluid pump **120** may be a radial inlet-axial outlet type fluid pump as shown in FIG. **3**C. The flow of the fluid may be transverse with respect to the X-Y plane of the intermediate layer **114**, as shown by arrows **304**. The flow of the fluid with respect to the X-Y plane or any other plane associated with the intermediate layer **114** may vary irrespective of the type of the fluid pump **120**. The fluid pump **120** may provide the flow of the fluid in order to overcome a pressure drop through the intermediate layer **114**. The intermediate layer **114** may be highly permeable in order to provide low pressure drop to the flow of the fluid during compression thereof when the occupant may be seated on the seating portion **104**.

[0033] FIG. **4** illustrates a top view of another portion of the system **110**. In some embodiments, the system **110** includes one or more conduits **402**. The conduit **402** is disposed substantially perpendicular with respect to the seating portion **102**. The conduit **402** is connected to the fluid pump **120**. The conduit **402** allows the flow of the fluid therethrough, as shown by arrows **404**. The system **110** further includes a plurality of auxiliary conduits **406** and openings **410** connected to the conduit **402** through which the fluid may flow. Each of the plurality of auxiliary conduits **406** and openings **410** distribute fluid through the intermediate layer **114**, as shown by arrows **408**. In an embodiment, each of the auxiliary conduits **406** are guide vanes. In embodiments, the plurality of auxiliary conduits **406** includes a pressure-based valve (not shown), such that the pressure-based valve allows the flow of the fluid based on a pressure applied by the occupant on the seating portion **102**.

[0034] FIG. **5**A illustrates a top view of another exemplary configuration of the system **110**. In embodiments, the system **110** includes a plurality of conduits **502**. Each conduit **502** is spaced apart from one another and substantially parallel to one another. Also, each conduit **502** is substantially perpendicular to the seating portion **102**. As shown in FIG. **5**A, there are six conduits. In embodiments, there are multiple conduits **502** based on application requirements. Each conduit **502** is connected to the fluid pumps **120**.

[0035] More specifically, the fluid pumps **120** may be disposed at the front of the seating portion **102**, such that the flow of the fluid may exit at the rear of the seating portion **102**. Also, each conduit **502** is disposed in the seating portion **102** and extends along the length "L" of the seating portion **102**. In some embodiments, when the conduits **502** are disposed within the backrest portion **104**, the fluid pumps **120** may be disposed at the bottom of the backrest portion **104**, such that the flow of the fluid exits at the top of the backrest portion **104**. Also, each conduit **502** may extend parallel to the backrest portion **104**. Each conduit **502** provides the flow of the fluid through an extended distance within the seating portion **102** and/or the backrest portion **104**. In some embodiments, an aluminum wire mesh is thermally connected to the conduits **502** to improve heat transfer.

[0036] Each conduit **502** allows fluid to flow through it, as shown by arrows **506**. In embodiments, each conduit **502** includes a pressure-based valve (not shown), such that the pressure-based valve actuates the flow of the fluid based on the pressure applied by the occupant on the seating portion **102**. As such, the seating portion **102** may be heated or cooled based on transfer of heat between the fluid and the intermediate layer **114** via each conduit **502**. In some embodiments, the conduits **502** includes interconnecting conduits **504** disposed between each conduit **502**. The interconnecting conduits **504** provide rigidity to the conduits **502**. In embodiments, the interconnecting conduits **504** provide cross flow of fluid between the conduits **502**. The conduits **502** and interconnecting conduits **504** may be made of metal, polymer, or another suitable material. In embodiments, one or more conduits **502** or the interconnecting conduit **504** is a heat pipe.

[0037] FIG. **5**B illustrates a partial cross-sectional view of the system **110** of FIG. **5**A. Each conduit **502** is disposed next to the base layer **112**. In an embodiment, the conduits **502** are embedded in the base layer **112**. The heating element **118** is disposed between the cover layer **116** and the conduits **502** and/or the base layer **112**. As illustrated, the intermediate layer **114** is omitted. In other embodiments, the conduits **502** are disposed next to the intermediate layer **114**, with the intermediate layer **114** disposed between the cover layer **116** and the base layer **112**. The conduits **502** may be disposed next to the base layer **112** or the intermediate layer **114**, and the heating element **118** may be disposed between

the cover layer **116** and the intermediate layer **114**, or the intermediate layer **114** and the base layer **112**, based on application requirements.

[0038] FIGS. **6**A and **6**B illustrate top view and partial cross-sectional view, respectively, of another configuration of the system **110**. The system **110** includes the conduits **502** and the heating elements **118**. As shown, there are four heating elements **118**. In embodiments, the heating element **118** includes a single or multiple heating elements **118** based on application requirements. Each heating element **118** is disposed substantially parallel to and spaced apart from one another. The heating elements **118** may also be spaced apart from the conduits **502**. Each heating element **118** may be disposed adjacent to each conduit **502**. In embodiments, the heating elements **118** are integrally formed with each conduit **502**. In other embodiments, the heating elements **118** are woven directly into the conduits **502**. For example, as illustrated, each heating element **118** is disposed in a gap **602** provided between the conduits **502**.

[0039] FIG. **7** illustrates a schematic representation of the system **110**. The system **110** includes the fluid pump **120**. In embodiments, the fluid pump **120** is disposed next to the seating portion **102** of the seat **100**. In embodiments, the fluid pump **120** is located away from the seat **100**. The system **110** also includes the heating element **118** associated with the seating portion **102** of the seat **100**. Each of the fluid pump **120** and the heating element **118** is communicably coupled to a controller **702**. The controller **702** controls the fluid pump **120** and the heating element **118** based on one or more parameters, such as an occupant input, an ambient temperature, a cabin temperature, a seat temperature, or another parameter. In embodiments, the controller **702** is a dedicated control unit configured to perform functions related to the system **110**. In other embodiments, the controller **702** may be an Electronic Control Unit (ECU) associated with the vehicle, or another control unit, configured to perform functions related to the system **110**.

[0040] Additionally, the system **110** includes a switch **704** communicably coupled to the controller **702**. The switch **704** provides an input to the controller **702** in order to control the fluid pump **120** and the heating element **118**. In embodiments, the switch **704** is a manual switch adapted to receive the occupant input indicative of actuating the fluid pump **120** and/or the heating element **118**. In embodiments, the switch **704** is a temperature-based switch adapted to provide the input indicative of actuating the fluid pump **120** and/or the heating element **118** based on exceeding or dropping of the temperature of the seat **100** beyond a threshold.

[0041] In other embodiments, the switch **704** is a pressure-based switch adapted to provide the input indicative of actuating the fluid pump **120** and/or the heating element **118** based on the pressure applied on the seating portion **102** of the seat **100**. In such a situation, the switch **704** may be associated with a pressure-based valve element (not shown). The pressure-based valve element may be provided in the seating portion **104** and may be actuated based on the pressure applied by the occupant. The pressure-based valve element may, in turn, actuate the switch **704** to selectively allow the flow of the fluid from the fluid pump **120** or actuate the heating element **118** based on the pressure applied on the seating portion **102** by the occupant.

[0042] The system **110** provides a simple, efficient, and cost-effective method of controlling the temperature of the seat **100**. The system **110** may be employed with any portion of the seat **100**, such as the seating portion **102**, the backrest portion **104**, and/or the headrest portion **108**. The system **110** provides substantially uniform cooling of the seat **100** by employing the intermediate layer **114** and/or the conduit **402**, and improved distribution of the cooling/heating. Also, the system **110** controls the temperature of the seat **100** with limited moving components, thus, reducing power consumption, system noise and improving occupant comfort. Also, the system **110** may be retrofitted in any seat **100** with little or no modification to the existing system.

[0043] The foregoing disclosure is not intended to limit the present disclosure to the precise forms or particular fields of use disclosed. As such, it is contemplated that various alternative embodiments and/or modifications to the present disclosure, whether explicitly described or implied herein, are possible in light of the disclosure. Having thus described embodiments of the present disclosure, a person of ordinary skill in the art will recognize that changes may be made in form and detail without departing from the scope of the present disclosure. For example, reference is made to "seat," but a person of ordinary skill in the art will understand that in certain embodiments, one or more other types of seats or seating devices may be substituted. Thus, the present disclosure is limited only by the claims.

[0044] In the foregoing specification, the disclosure has been described with reference to specific embodiments. However, as one skilled in the art will appreciate, various embodiments disclosed herein can be modified or otherwise implemented in various other ways without departing from the spirit and scope of the disclosure. Accordingly, this description is to be considered as illustrative and is for the purpose of teaching those skilled in the art the manner of making and using various embodiments of the disclosed seat. It is to be understood that the forms of disclosure herein shown and described are to be taken as representative embodiments.

[0045] Equivalent elements, or materials may be substituted for those representatively illustrated and described herein. Moreover, certain features of the disclosure may be utilized independently of the use of other features, all as would be apparent to one skilled in the art after having the benefit of this description of the disclosure. Expressions such as "including", "comprising", "incorporating", "consisting of", "have", "is" used to describe and claim the present disclosure are intended to be construed in a non-exclusive manner, namely allowing for items, components or elements not explicitly described also to be present. Reference to the singular is also to be construed to relate to the plural.

[0046] Further, various embodiments disclosed herein are to be taken in the illustrative and explanatory sense and should in no way be construed as limiting of the present disclosure. All joinder references (for example, attached, affixed, coupled, connected, and the like) are only used to aid the reader's understanding of the present disclosure, and may not create limitations, particularly as to the position, orientation, or use of the systems and/or methods disclosed herein. Therefore, joinder references, if any, are to be construed broadly. Moreover, such joinder references do not necessarily infer that two elements are directly connected to each other.

[0047] Additionally, all numerical terms, such as, but not limited to, "first", "second", "third", "primary", "secondary", "main" or any other ordinary and/or numerical terms,

should also be taken only as identifiers, to assist the reader's understanding of the various elements, embodiments, variations and/or modifications of the present disclosure, and may not create any limitations, particularly as to the order, or preference, of any element, embodiment, variation and/or modification relative to, or over, another element, embodiment, variation and/or modification. It will also be appreciated that one or more of the elements depicted in the drawings/figures can also be implemented in a more separated or integrated manner, or even removed or rendered as inoperable in certain cases, as is useful in accordance with a particular application.

1. (canceled)

2. A vehicle seat, the vehicle seat comprising:

a temperature-control system associated with a portion of a vehicle seat, the temperature-control system comprising:

a fluid pump configured to provide fluid flow; and

a conduit fluidically connected to the fluid pump and extending at least partially into the portion of the vehicle seat, wherein fluid flows through the conduit and into the portion of the vehicle seat.

3. The vehicle seat of claim **2**, wherein the conduit comprises a pressure-based valve configured to regulate a flow of the fluid through the conduit based at least in part on a pressure applied by an occupant of the vehicle seat.

4. The vehicle seat of claim **2**, wherein the temperature-control system further comprises a plurality of auxiliary conduits connected to the conduit, wherein each of the plurality of auxiliary conduits is configured to distribute fluid to portion of the vehicle seat through a respective opening.

5. The vehicle seat of claim **4**, wherein each of the plurality of auxiliary conduits comprises a pressure-based valve configured to regulate a flow of the fluid through a respective auxiliary conduit based at least in part on a pressure applied by an occupant of the vehicle seat.

6. The vehicle seat of claim **2**, wherein the conduit is a first conduit, and wherein the temperature-control system further comprises:

a second conduit fluidically connected to the fluid pump and extending at least partially into the portion of the vehicle seat, wherein fluid flows through the second conduit and into the portion of the vehicle seat; and

a plurality of interconnecting conduits disposed between the first conduit and the second conduit, wherein the plurality of interconnecting conduits are configured to allow cross flow of the fluid between the first conduit and the second conduit.

7. The vehicle seat of claim **2**, further comprising a heating element integrally formed with the conduit.

8. The vehicle seat of claim **2**, wherein the portion of the vehicle seat is a seating portion.

9. The vehicle seat of claim **2**, wherein the portion of the vehicle seat is a backrest portion.

10. The vehicle seat of claim **2**, wherein the portion of the vehicle seat comprises a plurality of layers, wherein the conduit extends at least partially into a first layer of the plurality of layers, and wherein fluid flows into the first layer.

11. The vehicle seat of claim **10**, wherein the first layer comprises at least one of a polymer foam or a metallic mesh.

12. A temperature-control system for a vehicle seat, the temperature-control system comprising:

a fluid pump configured to provide fluid flow; and

a conduit fluidically connected to the fluid pump and extending at least partially into the portion of the vehicle seat, wherein fluid flows through the conduit and into the portion of the vehicle seat.

13. The temperature-control system of claim **12**, wherein the conduit comprises a pressure-based valve configured to regulate a flow of the fluid through the conduit based at least in part on a pressure applied by an occupant of the vehicle seat.

14. The temperature-control system of claim **12**, wherein the temperature-control system further comprises a plurality of auxiliary conduits connected to the conduit, wherein each of the plurality of auxiliary conduits is configured to distribute fluid to portion of the vehicle seat through a respective opening.

15. The temperature-control system of claim **4**, wherein each of the plurality of auxiliary conduits comprises a pressure-based valve configured to regulate a flow of the fluid through the respective auxiliary conduit based at least in part on a pressure applied by an occupant of the vehicle seat.

16. The temperature-control system of claim **12**, wherein the conduit is a first conduit, and wherein the temperature-control system further comprises:

a second conduit fluidically connected to the fluid pump and extending at least partially into the portion of the vehicle seat, wherein fluid flows through the second conduit and into the portion of the vehicle seat; and

a plurality of interconnecting conduits disposed between the first conduit and the second conduit, wherein the plurality of interconnecting conduits are configured to allow cross flow of the fluid between the first conduit and the second conduit.

17. The temperature-control system of claim **12**, further comprising a heating element integrally formed with the conduit.

18. The temperature-control system of claim **12**, wherein the portion of the vehicle seat comprises a plurality of layers, wherein the conduit extends at least partially into a first layer of the plurality of layers, and wherein fluid flows into the first layer.

19. The temperature-control system of claim **20**, wherein the first layer comprises at least one of a polymer foam or a metallic mesh.

20. A temperature-control system for a vehicle seat, the temperature-control system comprising:

a means for providing fluid flow; and

a means for guiding the fluid flow into a portion of the vehicle seat.

21. The temperature-control system of claim **20**, wherein the means for guiding the fluid flow includes a conduit extending at least partially into the portion of the vehicle seat.

* * * * *