US 20160112787A1

(19) United States

(12) Patent Application Publication

Rich et al.

(10) Pub. No.: US 2016/0112787 A1

(43) Pub. Date: Apr. 21, 2016

(54) **AUDIO CLASS-COMPLIANT CHARGING ACCESSORIES FOR WIRELESS HEADPHONES AND HEADSETS**

(71) Applicant: **Apple Inc.**, Cupertino, CA (US)

(72) Inventors: **Zachary C. Rich**, San Francisco, CA (US); **Baptiste P. Paquier**, Saratoga, CA (US); **Joseph A. Sarlo**, Sunnyvale, CA (US); **Jahan C. Minoo**, San Jose, CA (US)

(21) Appl. No.: **14/517,693**

(22) Filed: **Oct. 17, 2014**

Publication Classification

(51) **Int. Cl.**

H04R 1/10 (2006.01)

H04B 1/3827 (2006.01)

(52) **U.S. Cl.**

CPC ***H04R 1/10*** (2013.01); ***H04B 1/385*** (2013.01); *H04B 2001/3872* (2013.01)

(57) **ABSTRACT**

A headphone is disclosed herein. The headphone includes a wireless transceiver, a wired communication module, a power storage device, a speaker, and control circuitry. The wireless transceiver and the wired communication module and the wireless transceiver are connected to the speaker via the control circuitry. The control circuitry is configured to determine whether to control the speaker according to data received via the wired communication module and the wireless transceiver and to seamlessly transition control of the speaker from data received from one of the wired communication module and the wireless transceiver to the other of the wired communication module and the wireless transceiver.

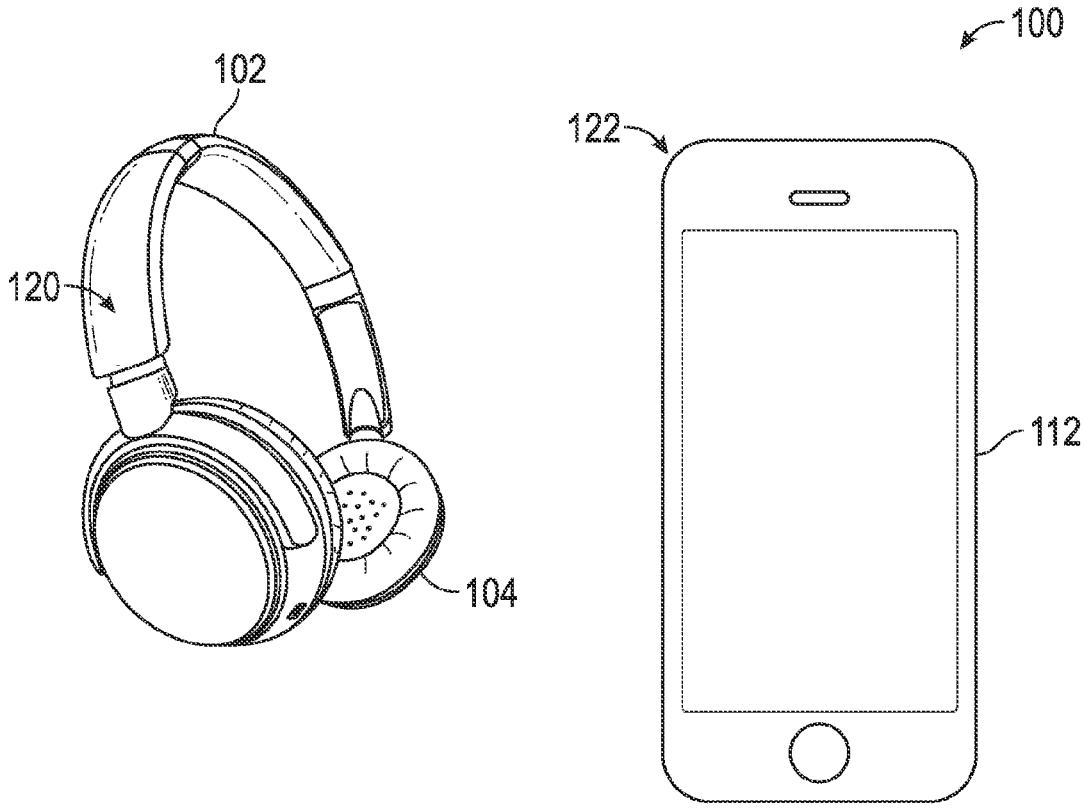

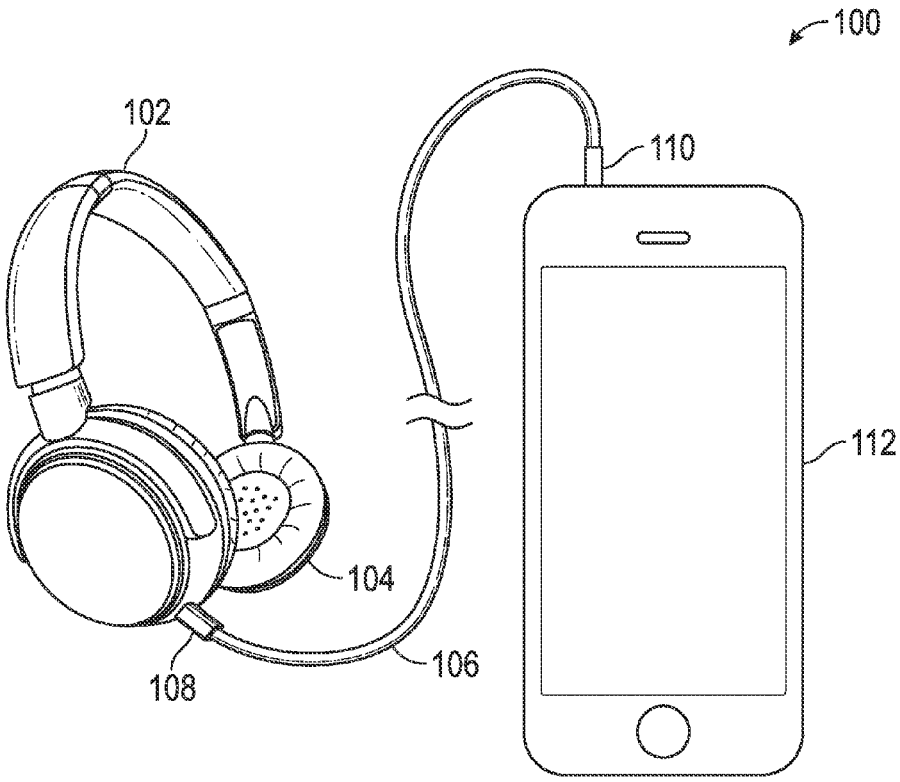

FIG. 1

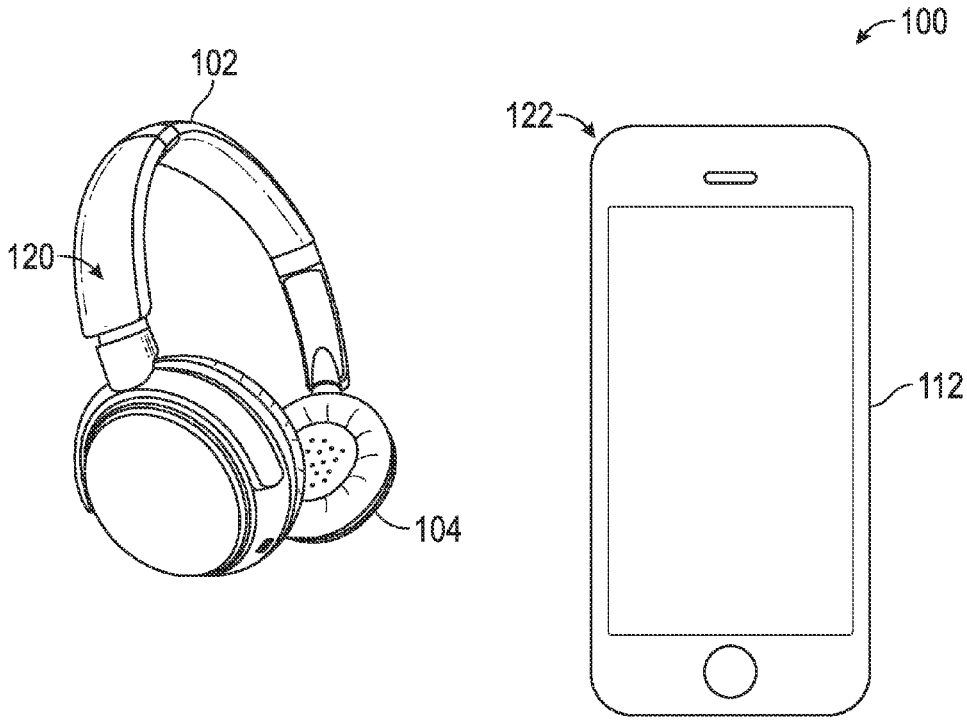

FIG. 2

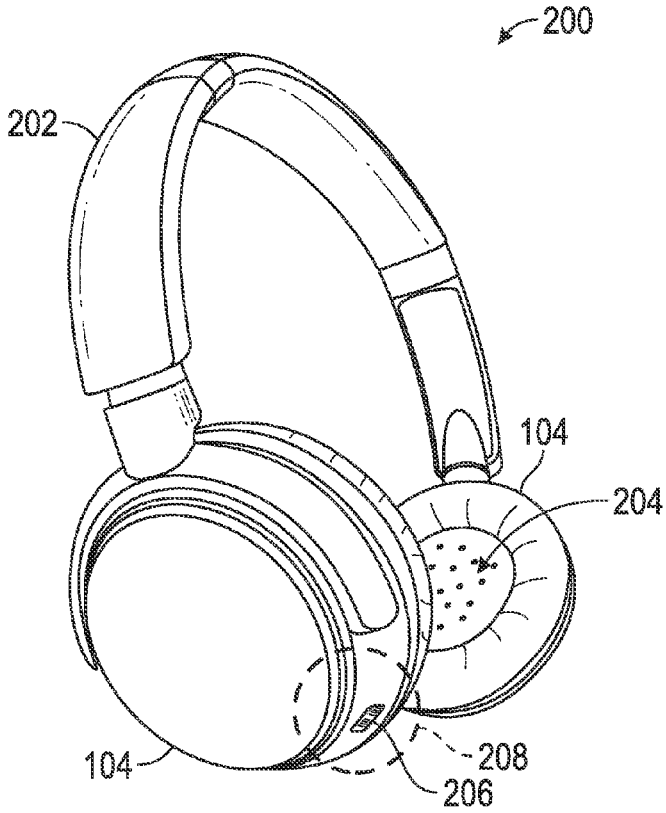

FIG. 3

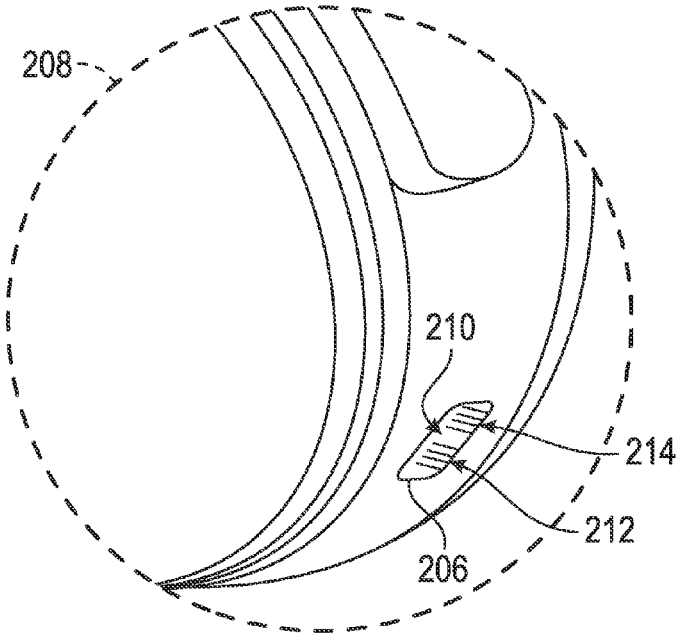

FIG. 4

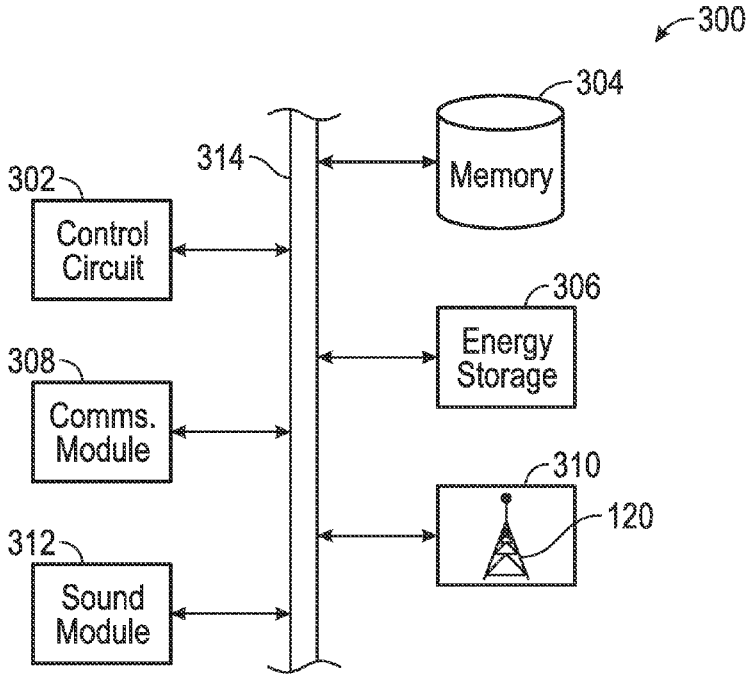
300
304
Memory
314
302
Control Circuit
306
Energy Storage
308
Comms. Module
310
120
312
Sound Module

FIG. 5

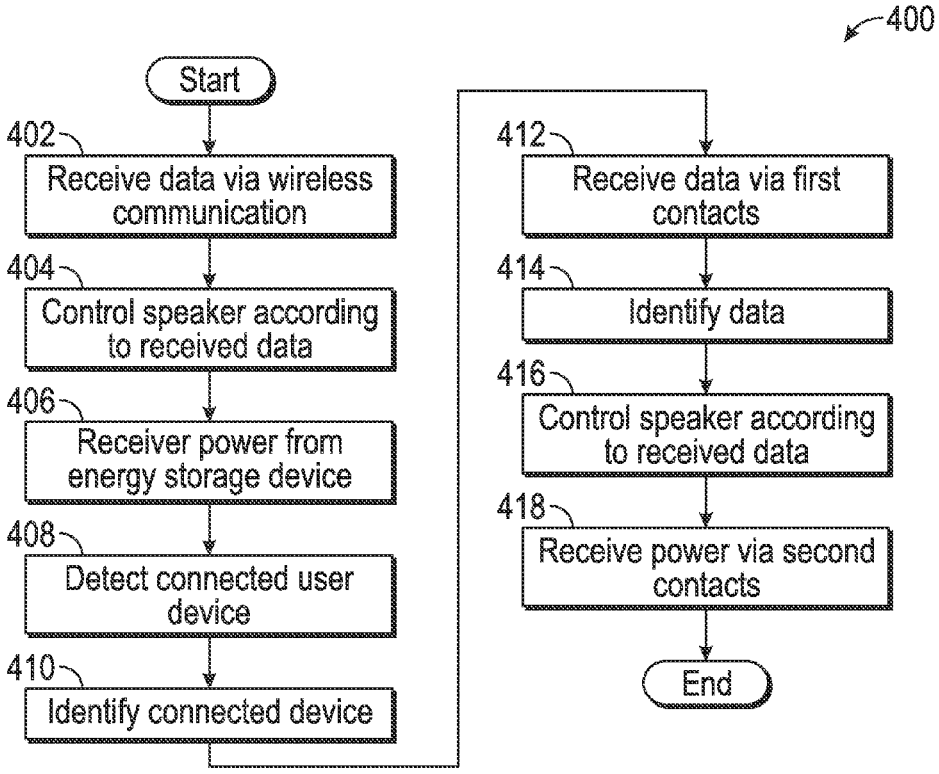
400
Start
402
Receive data via wireless communication
404
Control speaker according to received data
406
Receiver power from energy storage device
408
Detect connected user device
410
Identify connected device
412
Receive data via first contacts
414
Identify data
416
Control speaker according to received data
418
Receive power via second contacts
End

FIG. 6

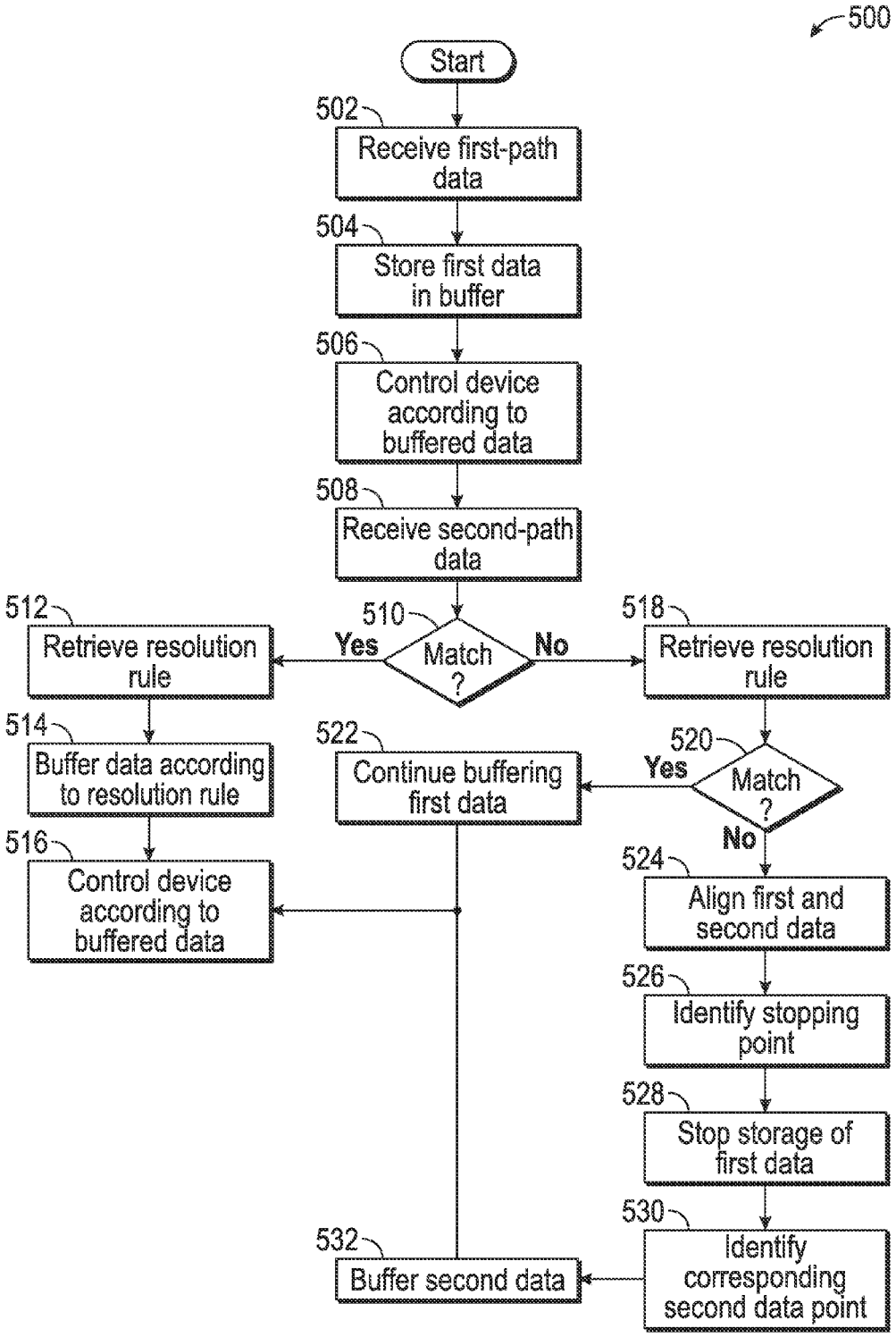
500
Start
502
Receive first-path data
504
Store first data in buffer
506
Control device according to buffered data
508
Receive second-path data
510
Match ?
Yes
No
512
Retrieve resolution rule
514
Buffer data according to resolution rule
516
Control device according to buffered data
518
Retrieve resolution rule
520
Match ?
Yes
No
522
Continue buffering first data
524
Align first and second data
526
Identify stopping point
528
Stop storage of first data
530
Identify corresponding second data point
532
Buffer second data

FIG. 7

AUDIO CLASS-COMPLIANT CHARGING ACCESSORIES FOR WIRELESS HEADPHONES AND HEADSETS

BACKGROUND

[0001] Electronic media consumption appears to be increasing both in volume and in the number of locations of consumption. This is particularly the case with the increase in prevalence of portable electronic devices, such as handheld electronic devices. Frequently, individuals consume this media using headphones, which can include a speaker that is positioned proximate to the ear. While headphones increase the ease with which media can be consumed, by increasing both the privacy with which the media can be consumed, and in many cases, the quality of audio, headphones are not desirable in every circumstance, and issues can arise in the use of headphones. Accordingly, new devices, systems, and methods are required to improve the performance of headphones.

BRIEF SUMMARY

[0002] Some embodiments relate to a headphone. The headphone includes an energy storage device, a wireless transceiver, which can include a wireless receiver, and a connector having a first contact and a second contact. In some embodiments, the first contact is connected to the energy storage device such that the energy storage device can be charged via the first contact. In some embodiments, the first contact can comprise a plurality of contacts including, for example, a power contact and a ground contact. The headphone can include an earpiece having a speaker, which speaker can be controllably connected to the second contact and to the wireless transceiver. In some embodiments, the second contact can comprise one or several contacts configured to transmit control signals. In one embodiment, the second contact can comprise a pair of contacts positioned so as to connect to components configured to transmit via a differential signal.

[0003] In some embodiments, the headphone includes a data buffer operatively coupled to receive audio data from the wireless transceiver and the second contact and to output audio data to the speaker. In some embodiments, the headphone includes control circuitry coupled to the data buffer and the speaker, the control circuitry can: (i) provide a first path for audio data received over the wireless transceiver to be stored in the data buffer and a second path for audio data received over the second contact to be stored in the data buffer, and (ii) determine whether to control the speaker according to audio data received over the wireless transceiver or according to audio data received of the second contact and/or whether to store audio data in the buffer that is received from the wireless transceiver or from the second contact.

[0004] In some embodiments, the control circuitry of the headphone can include a processor. In some embodiments, the processor can seamlessly transition speaker control between data received via the wireless transceiver and data received via the second contact. In some embodiments, the data buffer can be sized to operate the headphone for a predetermined amount of time without the receipt of additional data via the wireless transceiver or the second contact. This length of time can be greater than the length of time required to transition between storing data from the wireless transceiver into the buffer to storing data from the connector into the buffer.

[0005] In some embodiments, the headphone can be capable of receiving digital audio data via the second contact, and in some embodiments, the headphone can be capable of receiving analog data via the second contact. In some embodiments, the connector can be a USB connector, and in some embodiments, the connector can be a custom connector with USB signaling. In some embodiments, the energy storage device can be a rechargeable battery.

[0006] Some embodiments relate to a method of seamlessly transitioning between data sources controlling operation of a speaker. The method includes receiving data at a headphone from a user device via first data path, storing data received at the headphone from the user device via the first data path within a data buffer, controlling a speaker according to the data stored within the data buffer, receiving data from a second data path, and transitioning from storing data from the first data path within the data buffer to storing data from the second data path within the data duffer without affecting the controlling of the speaker according to the data stored within the data buffer.

[0007] In some embodiments, the first data path can be a wireless connection with a user device. In some embodiments, the second data path can be a wired connection with a user device.

[0008] In some embodiments, the method can include determining that the user device connected via the wired connection is the same user device as is connected via the wireless connection. An exemplary embodiment of the method can include determining that the data received via the second data path is the same as the data received via the first data path. In some embodiments, the method can include stopping the storing of data received from the first data path within the data buffer, and/or identifying a stopping point in the data stored in the data buffer and received from the first data path. In some embodiments, the stopping point can be the last data received from the first data path and stored in the data buffer.

[0009] In some embodiments, the method can include identifying data corresponding to the stopping point in the data received from the second data path. An exemplary embodiment of the method can include storing data from the second data path after the data corresponding to the stopping point in the data buffer. In some embodiments, the method can include sizing the data buffer to allow transitioning from storing data from the first data path within the data buffer to storing data from the second data path within the data buffer without affecting the controlling of the speaker according to the data stored within the data buffer.

BRIEF DESCRIPTION OF THE DRAWINGS

[0010] FIG. **1** is a schematic illustration of one embodiment of a headphone system communicating via a wired connection.

[0011] FIG. **2** is a schematic illustration of one embodiment of a headphone system communicating via a wireless connection.

[0012] FIG. **3** is a perspective view of one embodiment of a head-fitting headphone.

[0013] FIG. **4** is a detail view of a portion of the headphone of FIG. **3**.

[0014] FIG. **5** is a schematic illustration of one embodiment of a headphone.

[0015] FIG. **6** is a flowchart illustrating one embodiment of a process for controlling a headphone to generate sound.

[0016] FIG. **7** is a flowchart illustrating one embodiment of a process for controlling a headphone to seamlessly transition between data sources.

DETAILED DESCRIPTION

[0017] Embodiments of the headphone are disclosed herein. The headphone can include features to allow and facilitate the wireless and wired reception of data, including audio data, that can be used to control operation of one or more speakers of the headphone. In one embodiment, the headphone can include control circuitry connected to at least one speaker. The control circuitry can receive audio data from a wireless transceiver of the headphone and/or from a connector of the headphone, which wireless receiver can be a receiver. The control circuitry can, if audio data is received from both the wireless transceiver and the connector of the headphone, determine which audio data to use in controlling the speaker and can, determine whether to switch from controlling the speaker according to audio data from one of the wireless transceiver and the connector to controlling the speaker according to audio data from the other of the wireless transceiver and the connector. If it is determined that the control of the speaker should switch from audio data received from one of the wireless transceiver and the connector to audio data received from the other of the wireless transceiver and the connector, the control circuitry can seamlessly transition control of the speaker so that the transition is not noticed by the user. This can allow a user to switch between wired and wireless use of the headphone, which can improve the user experience.

[0018] In some embodiments of the headphone, the connector of the headphone can connect with the cable that can connect to or be connected to the user device. The connector of the headphone can include one or several first contacts and one or several second contacts, which first contacts can receive power from the cable and which second contacts can receive the audio data from the cable. In some embodiments, the first contacts can comprise a pair of contacts, one of which can be connected to circuitry to provide power—a power contact, and the other of which connected to ground—a ground contact. In some embodiments, the second contacts can comprise a pair of contacts connected to circuitry configured to transmit and/or receive data via differential signaling. In some embodiments, the cable can provide both power and audio data to the headphone. This combination of power and data into a single cable connected to the headphone can improve headphone performance by eliminating ground loops that can arise if separate power and data cables are connected to the headphone, which ground loops can degrade performance of the headphone, and specifically can adversely impact the audio fidelity of the headphone. Additionally, this combination of power and data into a single cable connected to the headphone can improve the user experience by eliminating the need for use of a cable to power the headphone and a separate cable to control the headphone.

[0019] With reference now to FIG. **1**, a schematic illustration of one embodiment of a headphone system **100** is shown, and specifically, one embodiment of headphone system **100** configured for wired communication of audio data is shown. Headphone system **100** includes a headphone **102**. Headphone **102** can be configured to receive audio data and convert the audio data into sound. Headphone **102** can be a variety of shapes and sizes, can be made from a variety materials, and can include a variety of features. In some embodiments, headphone **102** can include, for example, a head-fitting headphone, an ear-fitting headphone, such as, for example, ear buds, or any other type of headphone.

[0020] In the embodiment depicted in FIG. **1**, headphone **102** includes earpieces **104**. Earpieces **104** can interface between the user's ear and headphone **102**. In some embodiments, earpieces **104** can include one or several features configured to generate sound such as, for example, one or several speakers.

[0021] Headphone system **100** can include a cable **106** that can, for example, include features to allow simultaneous providing of power, such as electricity, and audio data to headphone **102**. Cable **106** can be a variety of shapes and sizes, a variety of cable types, and can be made from a variety of materials.

[0022] Cable **106** can connect to headphone **102** via a headphone connector **108**. Headphone connector **108** can be a variety of shapes and sizes and can be a variety of different connector types. In some embodiments, headphone connector **108** can receive power and/or audio data that can be used to control sound generated by headphone **102**. In some embodiments, headphone connector **108** can include features for receiving power to charge headphone **102** and features for receiving audio data to control sound generated by headphone **102**. In some embodiments, headphone connector **108** can be, for example, a USB connector, a SATA connector, or any other desired connector.

[0023] In some embodiments, headphone connector **108** can include a first portion that is located on headphone **102** such as, for example, a connector receptacle or a connector insert and a mating second portion that is located on cable **106**. Details of connector **108** will be discussed at greater length below.

[0024] Headphone system **100** can include user device **112**. User device **112** can be the source of audio data that controls the operation of headphone **102** and/or the source of power for the headphone **102**. In some embodiments, user device **112** can be an electronic device such as a portable electronic device including, for example, a computer, a tablet, a cell phone, a smart phone, a PDA, a television, a radio, a gaming console, or any other electronic device usable to consume media.

[0025] In some embodiments, user device **112** can connect to cable **106** via a device connector **110**. Device connector **110** can be a variety of shapes and sizes and can be a variety of different connector types. In some embodiments, device connector **110** can transmit power and/or audio data that can be used to control sound generated by headphone **102**. In some embodiments, device connector **110** can include features for transmitting power to power headphone **102** and/or for transmitting audio data to control sound generated by headphone **102**. In some embodiments, device connector **110** can be, for example, a USB connector, a SATA connector, or any other desired connector. In some embodiments, device connector **110** can include a first portion that is located on user device **112** such as, for example, a connector receptacle or a connector insert and a mating second portion that is located on cable **106**

[0026] With reference now to FIG. **2**, a schematic illustration of one embodiment of a headphone system **100** is shown, and specifically, one embodiment of a headphone system **100** configured for wireless communication of audio data is shown. Headphone system **100** includes a headphone **102** having earpieces **104**. Headphone **102** additionally includes

an antenna **120**. Antenna **120** can be part of a wireless transceiver that will be discussed at greater length below. In some embodiments, antenna **120** can be located so that all or portions of antenna **120** are inside of headphone **102**, and in some embodiments, antenna **120** can be located so that all or portions of antenna **120** are external to headphone **102**. Antenna **120** can be configured to receive information, such as, for example, audio data, from user device **112** from user device **112**.

[0027] As further seen in FIG. **2**, headphone system **100** includes user device **112** that include a wireless transmitter **122**. Wireless transmitter can include an antenna, and in some embodiments, wireless transmitter **122** can be located so that all or portions of wireless transmitter **122** are inside of user device **112**, and in some embodiments, wireless transmitter **122** can be located so that all or portions of wireless transmitter **122** are external to user device **112**. Wireless transmitter **122** can be configured to transmit information, such as, for example, audio data, to headphone **102**. In some embodiments, the wireless communication between headphone **102** and user device **112** can be performed according to any desired communication protocol or standard including, for example, Bluetooth, WiFi (WLAN), NFC, or the like

[0028] With reference now to FIG. **3**, a perspective view of one embodiment of a headphone **102** is shown. Headphone **102** can be configured to receive data, including, for example, audio data, and convert the data into sound. Headphone **102** can be a variety of shapes and sizes, can be made from a variety materials, and can include a variety of features. In some embodiments, headphone **102** can include, for example, a head-fitting headphone, an ear-fitting headphone—such as ear buds, or any other type of headphone.

[0029] Headphone **102** includes a headband **202**. Headband **202** can be sized and shaped to fit to a user's head, and can, in some embodiments, be adapted for variable sizing to fit to a variety of user heads. Headband **202** attaches to earpieces **104** of headphone **102** and holds earpieces **104** proximate to the user's ear when headphone **102** is placed on users head.

[0030] As seen in FIG. **3**, earpieces **104** include a speaker **204**. Speaker **204** can be used to generate sound based on audio data received by headphone **102**. Speaker **204** can be any desired type of controllable sound generating device.

[0031] Headphone **102** includes a connector **206**. Connector **206** depicted in FIG. **3** is located on headband **202**, but in other embodiments, connector **206** can be located on other portions of headphone **102** including, for example, on earpiece **104**.

[0032] Connector **206** can receive audio data for controlling operation of speaker **204** and can receive power including, for example, an electric power, for charging/recharging headphone **102** and/or for powering headphone **102**. Connector **206** can be a variety of shapes and sizes and can be a variety of types. In some embodiments, the size, shape, and type of connector **206** can be selected based on desired traits of headphone **102** such as, for example, the size and compatibility of headphone **102**. In some embodiments, connector **206** can include, for example, a universal serial bus ("USB") connector, a SATA connector, or any other connector type. Connector **206** can further be either a male or female connector, and can include, for example, a connector receptacle or a connector insert.

[0033] FIG. **3** further depicts detail region **208** which is shown enlarged in FIG. **4**. As seen in the expanded detail region **208** of FIG. **4**, connector **206** includes a plurality of contacts **210**. Contacts **210** can interface with corresponding contacts of cable **106** to allow the communication of data, which can include audio data, between user device **112** and headphone **102**, and/or transmission of power, such as electric power between user device **112** and headphone **102**.

[0034] Contacts **210** can include at least one first contact **212** and at least one second contact **214**. In some embodiments, first contact **212** can be connected with power-consuming and/or power-storing components of headphone **102**. In such an embodiment, power can be received from cable **106** via first contact **212** and provided to the power-consuming and/or power-storing components of headphone **102**. In some embodiments, second contact **214** can be connected with control circuitry of headphone **102**. In such an embodiment, data, including audio data and particularly digital audio data, received via second contact **214** can be provided to control circuitry of headphone **102**, and can be used to control operation of speaker **204** of headphone **102**.

[0035] With reference now to FIG. **5**, a schematic illustration of one embodiment of the hardware and software components **300** and/or modules of headphone **102** is shown. Headphone **102** can optionally include a control circuitry **302** that can include, for example, a processor. The processor can provide instructions to and receive information from the other components of headphone **102**. The processor can act according to stored instructions, which stored instructions can be located in memory, associated with the processor, and/or in other components of the headphone **102**. The processor can make decisions in accordance with stored instructions. The processor can be a microprocessor, such as a microprocessor from Intel® or Advanced Micro Devices, Inc.®, or the like. In some embodiments, the processor can be a System on Chip (SOC) such as, for example, an integrated circuit manufactured with ARM System-on-Chip architecture.

[0036] In some embodiments, the stored instructions directing the operation of the processor may be implemented by hardware, software, scripting languages, firmware, middleware, microcode, hardware description languages, and/or any combination thereof. When implemented in software, firmware, middleware, scripting language, and/or microcode, the program code or code segments to perform the necessary tasks may be stored in a machine readable medium such as a storage medium. A code segment or machine-executable instruction may represent a procedure, a function, a subprogram, a program, a routine, a subroutine, a module, a software package, a script, a class, or any combination of instructions, data structures, and/or program statements. A code segment may be coupled to another code segment or a hardware circuit by passing and/or receiving information, data, arguments, parameters, and/or memory contents. Information, arguments, parameters, data, etc. may be passed, forwarded, or transmitted via any suitable means including memory sharing, message passing, token passing, network transmission, etc.

[0037] Headphone **102** can optionally include a memory **304**. Memory **304** may represent one or more memories for storing data, including read only memory (ROM), random access memory (RAM), magnetic RAM, core memory, optical storage mediums, flash memory devices and/or other machine readable mediums for storing information. In some embodiments, memory **304** may be implemented within the processor or external to the processor. In some embodiments, memory **304** can be any type of long term, short term, volatile,

nonvolatile, or other storage medium and is not to be limited to any particular type of memory or number of memories, or type of media upon which memory is stored. In some embodiments, memory **304** can include, for example, one or both of volatile and nonvolatile memory. In one specific embodiment, memory **304** can include a volatile portion such as RAM memory, and a nonvolatile portion such as flash memory

[0038] Headphone **102** can include a buffer, also referred to herein as a data buffer. The buffer can be configured to temporarily store data that is being received by headphone **102**. In some embodiments, the buffer can be implemented in the memory **304**, can be implemented in software stored in the memory, or can be implemented in the control circuitry **302**. In some embodiments, the buffer can receive data, including audio data and specifically including digital audio data from wired communication module **308**, and specifically from second contact **214**, and/or wireless transceiver **310**, and can provide this data to control circuitry **302** of headphone **102**.

[0039] As depicted in FIG. **5**, headphone **102** can optionally include an energy storage device **306**. Energy storage device **306** can store energy such as, for example, electrical energy that can power headphone **102**. Energy storage device **306** can be any feature or combination of features capable of storing a desired amount of energy. In some embodiments, energy storage device **306** can be one or several batteries, rechargeable batteries, capacitors, or the like. Energy storage device **306** can have any desired capacity. In some embodiments, energy storage device **306** can have a capacity so as to enable operation of headphone **102** on power from energy storage device **306** for duration of at least 1 hour, 2 hours, 3 hours, 4 hours, 5 hours, 10 hours, 20 hours, 50 hours, or any other or intermediate length of time.

[0040] Headphone **102** can optionally include a wired communication module **308**. In some embodiments, the wired communication module can include connector **206**, contacts **210**, and/or any other hardware or software component used in receiving power and/or data, including audio data, via connector **206**.

[0041] Headphone **102** can optionally include a wireless transceiver **310**, which can be, for example, a wireless receiver. Wireless transceiver **310** can, in some embodiments, include antenna **120** and software or hardware components used to control and/or operate antenna **120**. Wireless transceiver **310** can be configured to wirelessly send and receive information. In some embodiments, for example, wireless transceiver **310** can receive data, which can include, for example, audio data from the user device **112** and provide this data to other components of headphone **102** including, for example, control circuitry **302**.

[0042] Headphone **102** can optionally include a sound generation module **312**. In some embodiments, sound generation module **312** can include speaker **204** or other components of headphone **102** that create sound waves and/or control speaker **204** or the creation of sound waves.

[0043] In some embodiments, components **300** of headphone **102** can be communicatingly and/or electrically connected. As depicted in FIG. **5**, components **300** of headphone **102** are communicatingly and/or electrically connected via a circuit board **314**. While depicted in the embodiment of FIG. **5** as circuit board **314**, components **300** of headphone **102** can be connected via any desired features or components including, for example, one or several wires, one or several lightguides, or the like.

[0044] With reference now to FIG. **6**, a flowchart illustrating one embodiment of a process **400** for generating sound with headphone **102** is shown. Process **400** begins at block **402** wherein data is wirelessly received via wireless transceiver **310**. In some embodiments, this data can be received from a user device **112**, which user device **112** can be identified based, in part, on the received data. This data, which can include audio data, is provided to control circuitry **302**. The control circuitry **302** can, as illustrated in block **404** control the sound generation module **312** and the speaker **204** according to the data.

[0045] After the sound generation module **312** is controlled according to the received data, or simultaneously therewith, process **400** proceeds to block **406**, wherein power is received from energy storage device **306**. In some embodiments, this can include using power from energy storage device **306** to power the operation of headphone **102**.

[0046] In some embodiments, while headphone **102** is operating according to data received via wireless transceiver **310**, a connection to a user device **112** via wired communication module **308** is detected as indicated in block **408**. In some embodiments, this detection can include, for example, identifying the user device **112** connected via wired communication module **308** and determining if the user device **112** connected via wired communication module **308** is the same as the user device **112** connected via wireless transceiver **310**.

[0047] After the user device **112** connected via wired communication module **308** has been identified, process **400** proceeds to block **412**, wherein data, including, for example, audio data, is received via contacts **210**, and in some embodiments, via second contacts **214**. After the data has been received, process **400** proceeds to block **414**, wherein the received data is identified. In some embodiments, the identification of the received data can include determining if the data received via wired communication module **308** is the same as data received via wireless transceiver **310**.

[0048] After the data received via wired communication module **308** has been identified, process **400** proceeds to block **416**, wherein speaker **204** is controlled according to the received data. In some embodiments, speaker **204** can be controlled according to the received data by control circuitry **302**, which control circuitry **302** can generate control signals, corresponding to the received data, to control speaker **204**. In some embodiments in which it is determined that the user device **112** connected to headphone **102** via wired communication module **308** is the same as the user device **112** connected to headphone **102** via wireless transceiver **310**, and/or it is determined that the data received via wireless transceiver **310** is the same as data received via wired communication module **308**, this step can include controlling speaker **204** according to the data received via wired communication module **308**. In some embodiments in which it is determined that the user device **112** connected to headphone **102** via wired communication module **308** is different than the user device **112** connected to headphone **102** via wireless transceiver **310**, and/or it is determined that the data received via wireless transceiver **310** is different than data received via wired communication module **308**, this step can include controlling speaker **204** according to the data received via wireless transceiver **310**.

[0049] After the speaker is controlled according to the received data, or simultaneous therewith, process **400** proceeds to block **418**, wherein power is received via wired communication module **308**. In some embodiments, this can

include receiving electrical power via connector **206** and/or at least one contact **210** of connector **206**, including, for example, first contact **212**.

[0050] With reference now to FIG. **7**, a flowchart illustrating one embodiment of a process **500** for controlling headphone **102** is shown. Process **500** can be performed to allow seamless transition between controlling headphone **102** according to data received via wired communication module **308** and data received via wireless transceiver **310**. In some embodiments, the steps of process **500** can be serially performed, one after another, and in some embodiments, one or several of the steps of process **500** can be simultaneously performed.

[0051] Process **500** begins in block **502** wherein data is received via a first path. Data received via a first path is also referred to herein as first data. In some embodiments, data received via the first path can be received via one of the wired communication module **308** and wireless transceiver **310**. In some embodiments, this first data can be received from a user device, which user device can, in some embodiments, be identified based on some or all of the first data.

[0052] After the data has been received via the first path, or alternatively if data is received via the first path over a period of time such as, for example, when data is being streamingly received, while the data is being received via the first path, process **500** proceeds to block **504** wherein some or all of the first data is stored in the buffer and/or is buffered. In some embodiments, the buffer can be in memory **304**. In some embodiments, the amount of data stored in the buffer and/or buffered can be selected to allow a desired amount of uninterrupted sound generation by speaker **204** if the receipt of data by headphone **102** is interrupted. In some embodiments, the buffer can be sized to allow uninterrupted sound generation for 0.1 seconds, 0.2 seconds, 0.3 seconds, 0.5 seconds, 1 second, 2 seconds, 3 seconds, 5 seconds, 10 seconds, 20 seconds, 30 seconds, 1 minute 5 minutes, and/or any other or intermediate length of time.

[0053] After or while the first data has been stored in the buffer, and after and/or while data is being buffered, process **500** proceeds to block **506**, wherein headphone **102**, and specifically speaker **204** of headphone **102** is controlled according to the first data that is stored in the buffer. In some embodiments, control circuitry **302** can receive data from the buffer and can, based on the received data, generate control signals to control the operation of speaker **204**.

[0054] After, or simultaneous with the control of headphone **102** according to the first data, process **500** proceeds to block **508**, wherein data is received via a second path. The data received via the second path is also referred to herein as second data. In some embodiments, data received via the second path can be received via the other of the wired communication module **308** and wireless transceiver **310** than by which the first data was received. In some embodiments, this second data can be received from a user device, which user device may be the same or different than the user device from which the first data was received. In some embodiments, this user device can be identified based on some or all of the second data.

[0055] After, or simultaneous with the receipt of the second data, process **500** proceeds to decision state **510**, wherein it is determined if there is a match. In some embodiments, this determination can include determining whether the user-device source of the first and second data is the same and/or whether the first and second data are the same. These determinations can be made by, for example, comparing information identifying the user-device source of both the first and second data to see if the user devices are the same, and/or comparing the first and second data to determine if there is a match between some or all of the received first and second data. In some embodiments a match may be identified if some or all of the received first and second data match, even in instances having an offset in time between receipt of the first and second data. In some embodiments, a match may be identified if there is an acceptable level of difference between the first and second data. In some embodiments, for example, a discrepancy between the first and data may arise due to an error or aberration. In embodiments in which a match can be identified if there is an acceptable level of difference between the first and second data, the discrepancy between the first and second data can be identified, quantified, and compared to a threshold value to determine if there is an acceptable level of difference between the first and second data. In some embodiments, the comparison of the first and second data can be performed by control circuitry **302**.

[0056] If it is determined that there is not a match, then process **500** proceeds to block **512** wherein a resolution rule is retrieved. In some embodiments, the resolution rule can include one or several rules for selecting one of the first and second data for control of headphone **102**. In some embodiments, the resolution rule can, for example, indicate that headphone **102** is controlled according to data received via one of wired communication module **308** and wireless transceiver **310** when data is received via both of wired communication module **308** and wireless transceiver **310**. In one embodiment, for example, the resolution rule can indicate that headphone **102** is controlled according to data received via wired communication module **308** when data is received via both of wired communication module **308** and wireless transceiver **310**.

[0057] After the resolution rule is retrieved, process **500** proceeds to block **514**, wherein data is stored in the buffer according to the resolution rule. In some embodiments, this can include switching from storing the first data in the buffer to storing the second data in the buffer, or continuing to store the first data in the buffer. In some embodiments, in which the user-device sources of the first and second data do not match, but the first and second data match, and in which the resolution rule indicates control of headphone **102** according to the second data, the transition from storing the first data in the buffer to storing the second data in the buffer can be seamlessly performed as outlined in blocks **524** to **532** below.

[0058] After storing data in the buffer according to the resolution rule, process **500** proceeds to block **516** wherein headphone **102**, and specifically speaker **204** of headphone **102**, is controlled according to the data that is stored in the buffer. In some embodiments, control circuitry **302** can receive data from the buffer and can, based on the data, generate control signals to control the operation of speaker **204**.

[0059] Returning again to decision state **510**, if it is determined that there is a match, then process **500** proceeds to block **518** wherein a resolution rule is retrieved. In some embodiments, the resolution rule can be same as, or different than the resolution rule identified in block **512**. The resolution rule can include one or several rules for selecting one of the first and second data for control of headphone **102**. In some embodiments, the resolution rule can, for example, indicate that headphone **102** is controlled according to data received

via one of wired communication module **308** and wireless transceiver **310** when data is received via both of wired communication module **308** and wireless transceiver **310**. In one embodiment, for example, the resolution rule can indicate that headphone **102** is controlled according to data received via wired communication module **308** when data is received via both of wired communication module **308** and wireless transceiver **310**.

[0060] After the resolution rule has been received, process **500** proceeds to decision state **520**, wherein it is determined if the resolution rule indicates continued control of headphone **102** with the first data. If it is determined that the resolution rule indicates continued control of headphone **102** with the first data, then process **500** proceeds to block **522**, wherein first data continues to be stored in the buffer, and then continues to block **516**, wherein headphones are controlled according to the data in the buffer as discussed above.

[0061] Returning again to decision state **520**, if it is determined that the resolution does not indicate continued control of headphones **102** with the first data, then process **500** proceeds to block **524**, wherein the first data and the second data are aligned. In some embodiments, this can include synchronizing the first and second data. After the first and second data are aligned process **500** proceeds to block **526**, wherein a stopping point is identified in the first data. In some embodiments, the stopping point identifies a point in the first data after which the first data is no longer stored in the buffer. In some embodiments, the stopping point can be the earliest synchronized point in the first and second data that has not been added to the buffer or that was the last piece of data added to the buffer.

[0062] After the stopping point has been identified, process **500** proceeds to block **528**, wherein the addition of first data to the buffer is stopped at the stopping point. After the addition of first data to the storage buffer has been stopped, process **500** proceeds to block **530**, wherein the point in the second data corresponding to the stopping point is identified. After the point corresponding to the stopping point has been identified in the second data, process **500** proceeds to block **532**, wherein second data, beginning with the point corresponding to the stopping point is stored in the buffer. In some embodiments, this can be performed so that there are no gaps in the data, missing pieces of data, or duplicate data in the buffer.

[0063] After starting storing second data in the data buffer, process **500** proceeds to block **516**, wherein headphone **102** is controlled according to data stored in the buffer. In some embodiments, control of headphone **102** according to data stored in buffer results in eventual control of headphone **102** according to the second data.

[0064] In some embodiments, the steps of process **500**, and specifically, steps starting at block **524** can be performed so as to allow seamless control of headphone **102**. In such an embodiment, control of headphone **102** can be switched from the first data to the second data without affecting the controlling of the headphone **102** according to the data stored within the data buffer. This can allow transitioning between control according to first data to control according to second data without the operator of headphone **102** being able to notice the transition. In some embodiments, and to facilitate this transition, the buffer can be sized so that steps of process **500** including and following block **524** can be performed before the buffer has been emptied, thereby eliminating any noticeable interruption in operation of headphone **102**.

[0065] The above description of embodiments of the invention has been presented for the purposes of illustration and description. It is not intended to be exhaustive or to limit the invention to the precise form described, and many modifications and variations are possible in light of the teaching above. The embodiments were chosen and described in order to best explain the principles of the invention and its practical applications to thereby enable others skilled in the art to best utilize the invention in various embodiments and with various modifications as are suited to the particular use contemplated. Thus, it will be appreciated that the invention is intended to cover all modifications and equivalents within the scope of the following claims

1. A headphone comprising:

a wireless transceiver;

an electrical connector;

an earpiece having a speaker, wherein the speaker is controllably connected to the electrical connector and the wireless transceiver;

a data buffer operatively coupled to the speaker and configured to output audio data stored in the data buffer to the speaker; and

control circuitry coupled to the data buffer, the control circuitry configured to:

(i) provide a first path for audio data received by the wireless transceiver to be stored in the data buffer and a second path for audio data received by the electrical connector to be stored in the data buffer,

(ii) determine that the first path and the second path are both being received from the same user device, and

(iii) transition from storing audio data from the first path in the data buffer to storing audio data from the second path in response to the control circuitry determining audio data is being received through the second path.

2. The headphone of claim **1**, wherein the electrical connector comprises:

a first contact configured to receive electrical power; and

a second contact configured to receive the audio data associated with the second path.

3. The headphone of claim **2**, further comprising:

an energy storage device in electrical communication with the first contact and configured to be charged by way of power provided by way of the first contact.

4. The headphone of claim **1**, wherein the control circuitry comprises a processor.

5. The headphone of claim **4**, wherein the processor is configured to seamlessly transition speaker control between audio data received via the wireless transceiver and audio data received via the electrical connector.

6. The headphone of claim **3**, wherein the data buffer is sized to operate the headphone for a predetermined amount of time without the receipt of additional data via the wireless transceiver or the electrical connector.

7. The headphone of claim **1**, wherein the headphone is configured to receive digital audio data via the electrical connector.

8. (canceled)

9. (canceled)

10. The headphone of claim **3**, wherein the energy storage device comprises a rechargeable battery.

11. A method of seamlessly transitioning between data sources controlling operation of a speaker in a headphone, the method comprising:

receiving data at the headphone via a wireless data path;

storing the data received via the wireless data path within a data buffer;

controlling a speaker according to the data stored within the data buffer;

receiving data at the headphone via a wired data path;

determining that the data received over the wireless data path and the wired data path are both being received from the same user device; and

transitioning from storing data from the wireless data path within the data buffer to storing data from the second data path within the data buffer.

12. (canceled)

13. (canceled)

14. (canceled)

15. The method of claim **11**, further comprising determining that the data received via the wired data path is the same as the data received via the wireless data path.

16. The method of claim **15**, further comprising stopping the storing of data received from the wireless data path within the data buffer.

17. The method of claim **16**, comprising identifying a stopping point in the data stored in the data buffer and received from the wireless data path, wherein the stopping point is the last data received from the wireless data path and stored in the data buffer.

18. The method of claim **17**, comprising identifying data corresponding to the stopping point in the data received from the wired data path.

19. The method of claim **18**, comprising storing data from the wired data path after the data corresponding to the stopping point in the data buffer.

20. The method of claim **11**, comprising sizing the data buffer to allow transitioning from storing data from the wireless data path within the data buffer to storing data from the second data path within the data duffer without affecting the controlling of the speaker according to the data stored within the data buffer.

21. The headphone of claim **1**, wherein the electrical connector is configured to receive a single plug that delivers both power and data to the headphone.

22. The headphone of claim **1**, wherein the controller transitions from storing audio data from the first path to storing audio data from the second path whenever audio data is available from the second path.

23. A headphone comprising:

a wireless transceiver;

an electrical connector;

an earpiece having a speaker, wherein the speaker is controllably connected to the electrical connector and the wireless transceiver;

a data buffer operatively coupled to the speaker and configured to output audio data stored in the data buffer to the speaker; and

control circuitry coupled to the data buffer, the control circuitry configured to:

(i) provide a first path for audio data received by the wireless transceiver to be stored in the data buffer and a second path for audio data received by the electrical connector to be stored in the data buffer,

(ii) determine that the audio data being received from the first path and the second path are the same, and

(iii) transition from storing the audio data from the first path in the data buffer to storing the audio data from the second path.

24. The headphone of claim **23**, wherein the electrical connector comprises:

a first contact configured to receive electrical power; and

a second contact configured to receive the audio data associated with the second path.

25. The headphone of claim **23**, wherein the audio data being received from the second path has a higher quality than the audio data being received from the first path.

* * * * *